MX285 CASE IH MAGNUM TRACTOR (NORTH AMERICA)

02-01 RADIATOR AND FAN SHROUD

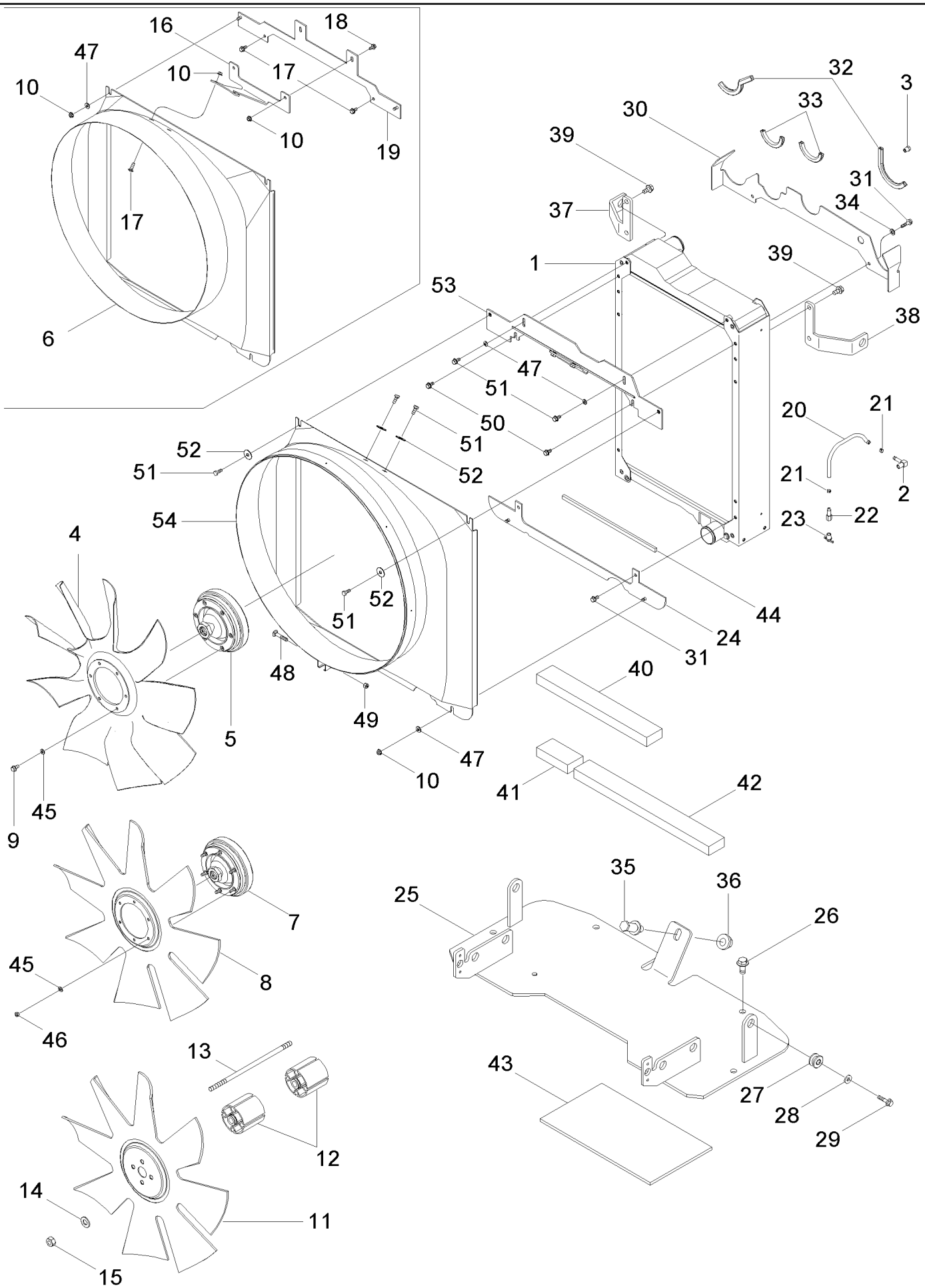

MX285 CASE IH MAGNUM TRACTOR (NORTH AMERICA)

02-01 RADIATOR AND FAN SHROUD

ссылка	Номер детали	Кол-во	Описание
1	REF	1	INSTRUCTION, Radiator Assy, See Figure 02-02
2	217-132	1	ELBOW, 90є, 3/8" Hose x 1/4" NPTF Beaded, 3/8 stem x 1/4 PT
3	86568834	1	PLUG, Hex Hd, 1/4"-18 NPTF, 1/4 PT
4	427509A1	1	FAN, 9 Blade, MX210, MX230
5	447917A2	1	DRIVE ASSY., Viscous, MX210, MX230
6	NSS	1	NOT SERVICED SEPARATELY, SHROUD (If Equipped), Order 87415556I Shroud REF 54
7	447916A1	1	DRIVE ASSY., Viscous, MX255, MX285
8	278432A1	1	FAN, 8 Blade, MX255, MX285
9	555-1	6	SCREW, Hex Flg, M8 x 16, 8.8, M8 x 16; 8.8, MX210, MX230
10	825-2408	8	NUT, M8 x 1.25, Flg, Cl 8,
11	353083A1	1	FAN, 8 Blade (If Equipped), With Optional Third Oil Cooler
12	A184547	2	SPACER, Fan, With Optional Third Oil Cooler
13	360195A3	4	THREADED ROD, M10 x 170 mm, With Optional Third Oil Cooler
14	895-15010	4	WASHER, M11 x 24 x 2, 11 x 24 x 2 mm
15	829-1410	4	NUT, M10, Cl 10, M10; 10.9
16	NSS	1	NOT SERVICED SEPARATELY, BRACKET (If Equipped), Order 87413766 REF 53
17	811-8025	2	BOLT, Short NK, M8 x 25, Cl8.8, Full Thd, M8 x 25
18	844-8025	2	BOLT, Hex Flg, M8 x 25, 8.8, M8 x 25; 8.8
19	NSS	1	NOT SERVICED SEPARATELY, BRACKET (If Equipped), Order 87413766 REF 53
20	242065A1	1	HOSE,
21	1348264C1	2	CLAMP, HOSE, 3/8 ID
22	217-180	1	FITTING, 3/8" Hose x 1/4" NPTF, Fem, Barbed, 3/8 barb x 1/4 fem PT
23	217-103	1	COCK, DRAIN, 1/4 PT
24	256719A3	1	SUPPORT,
25	255647A5	1	SUPPORT,
26	844-12025	4	BOLT, Hex Flg, M12 x 25, 8.8, M12 x 25; 8.8
27	434177A1	4	MOUNTING, RUBBER,
28	495-81120	4	WASHER, .344" x 1 1/4" x .120", 11/32 x 1-1/4 x 7/64
29	614-8030	4	BOLT, Hex, M8 x 30, 8.8, M8 x 30; 8.8
30	417375A2	1	PLATE, LARGE,
31	555-1	6	SCREW, Hex Flg, M8 x 16, 8.8, M8 x 16; 8.8
32	426356A1	2	LINING, 184 mm (7-1/4 in)
33	417390A1	2	LINING, 117 mm (4-7/64 in)
34	895-11008	2	WASHER, M8 x 16 x 1.6, 9 x 16 x 1.6 mm
35	198575A1	1	SCREW,
36	9804279	1	NUT, M12 x 1.75, Flg, Cl 8,
37	255646A1	1	SUPPORT, Left Hand
38	255645A1	1	SUPPORT, Right Hand
39	555-1	4	SCREW, Hex Flg, M8 x 16, 8.8, M8 x 16; 8.8
40	296292A1	1	SEAL,
41	296294A1	1	SEAL,
42	296295A1	1	SEAL,
43	429228A1	1	SEAL,
44	357158A2	3	SEAL,
45	496-11034	6	WASHER, 11/32" x 11/16" x 1/16", HDN, 11/32 x 11/16 x 1/16, MX255, MX285

MX285 CASE IH MAGNUM TRACTOR (NORTH AMERICA)

02-01 RADIATOR AND FAN SHROUD

ссылка	Номер детали	Кол-во	Описание
46	829-1408	6	NUT, M8, Cl 10, M8; 10, MX255, MX285
47	895-15008	4	WASHER, M8 x 20 x 1.6, 9 x 20 x 1,6 mm
48	612-4	1	BOLT, CARRIAGE, M8 x 50, 4.6, Carriage, M8 x 50 mm
49	832-10408	1	NUT, M8 x 1.25, Cl 8, Lock, M8
50	555-1	4	SCREW, Hex Flg, M8 x 16, 8.8, M8 x 16; 8.8
51	614-8020	6	BOLT, Hex, M8 x 20, 8.8, M8 x 20
52	495-81140	4	WASHER, 13/32" x 1 1/4" x .060", 13/32 x 1-1/4 x 1/16
53	87413766	1	BRACKET,
54	87415556I	1	SHROUD, Inc. 48, 49, 51 - 53

MX285 CASE IH MAGNUM TRACTOR (NORTH AMERICA)

02-02 RADIATOR ASSEMBLY

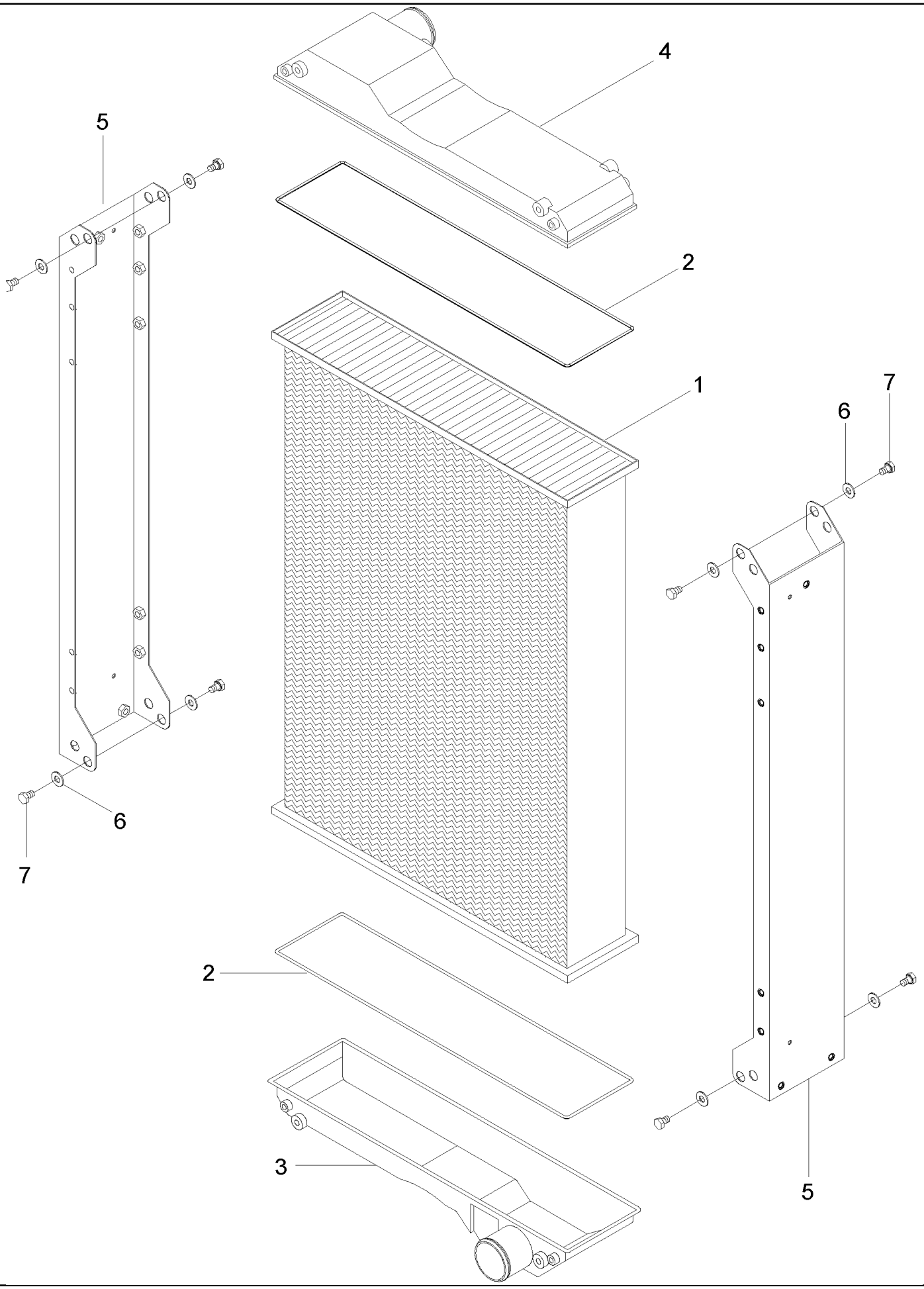

MX285 CASE IH MAGNUM TRACTOR (NORTH AMERICA)

02-02 RADIATOR ASSEMBLY

ссылка	Номер детали	Кол-во	Описание
	417859A2	1	RADIATOR, Inc.1 - 7, MX210, MX230
	417858A2	1	RADIATOR, Inc.1 - 7, MX255, MX285
1	NSS	1	NOT SERVICED SEPARATELY, Core
2	175163A1	2	GASKET,
3	256019A1	1	TANK, Bottom
4	394509A1	1	TANK, Top
5	417849A1	2	CHANNEL,
6	895-15008	8	WASHER, M8 x 20 x 1.6, 9 x 20 x 1,6 mm
7	614-8012	8	SCREW, Hex, M8 x 12, 8.8, Full Thd, M8 x 12; 8,8

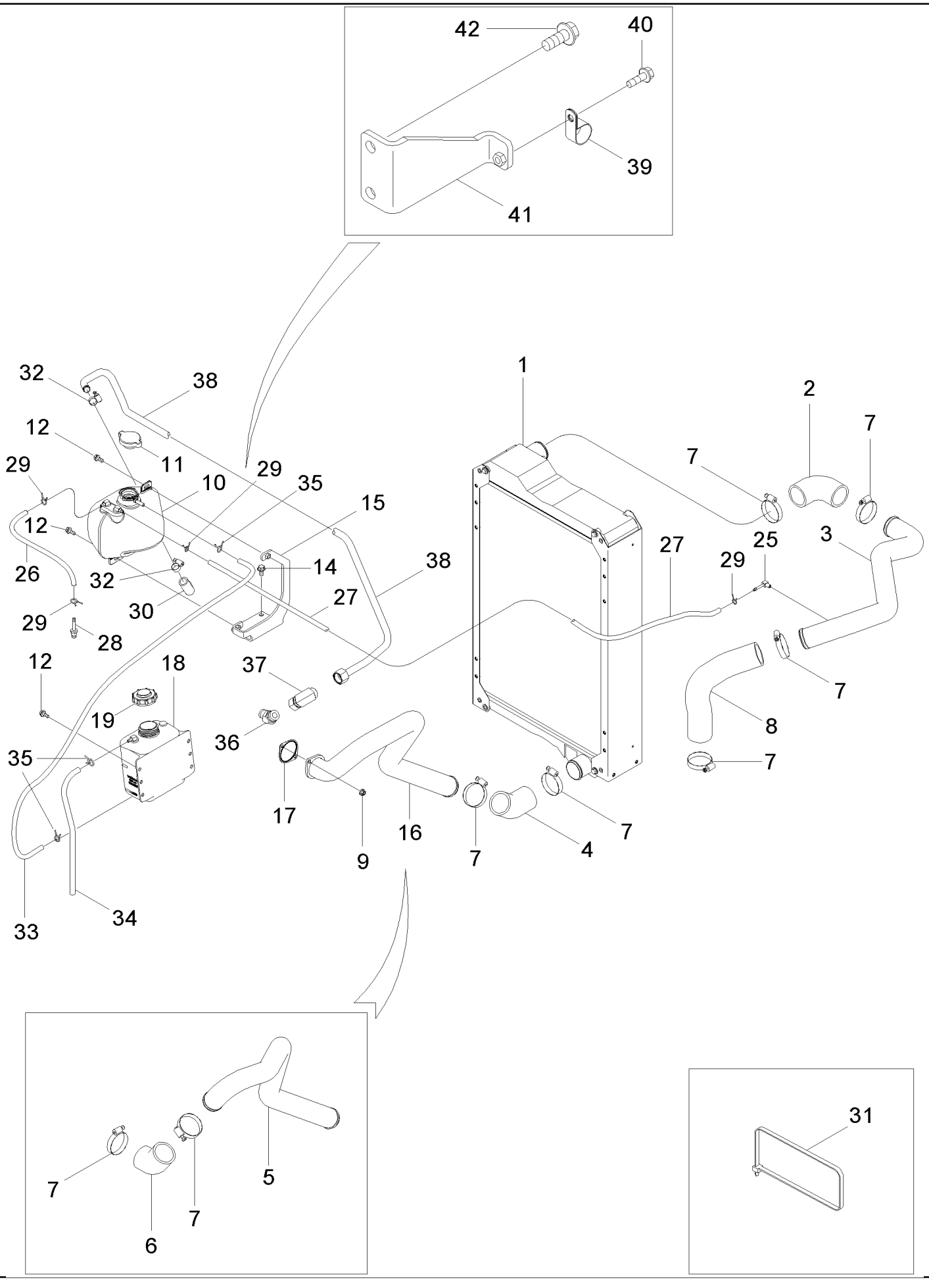
42
40
39
41
32
38
12
11
29
10
29
35
15
12
14
38
26
32
27
30
29
28
12
18
37
19
36
35
17
9
16
7
4
7
33
34
1
2
7
7
27
29
25
3
7
8
7
7
5
7
7
6
31

MX285 CASE IH MAGNUM TRACTOR (NORTH AMERICA)

02-03 DEAERATION SYSTEM

ссылка	Номер детали	Кол-во	Описание
1	REF	1	INSTRUCTION, Radiator, See Figure 02-02
2	397511A1	1	HOSE,
3	414388A2	1	TUBE, , BSN JAZ135316
3	87444200	1	TUBE, , ASN JAZ135316
4	255682A2	1	HOSE, LARGE,
5	315911A1	1	HOSE, LARGE, , BSN JAZ130634
6	255683A2	1	HOSE, , BSN JAZ130634
7	214-3248	6 - 8	CLAMP, HOSE, 2.25/3.125 HD Worm, W/liner, 2-1/4 x 3-1/8
8	414804A1	1	HOSE, , BSN JAZ135316
8	87306058	1	HOSE, , ASN JAZ135316
9	87403515	2	BOLT, M8 x 20; 8.8, ASN JAZ130634
10	417934A1	1	TANK,
11	A170241	1	CAP, RADIATOR, 15 psi
12	844-8020	4	BOLT, Hex Flg, M8 x 20, 8.8,
14	854-10020	3	BOLT, Hex Flg, M10 x 20, 10.9, M10 x 20; 10.9
15	87404517	1	BRACKET,
16	87415507	1	TUBE ASSY., , ASN JAZ130634
17	J945603	1	GASKET,
18	L127093	1	RESERVOIR, COOLANT EXPNSN,
19	440729A1	1	PLUG,
25	217-130	1	ELBOW, 90є, 1/4" Hose x 1/8" NPTF Beaded, 1/4 stem x 1/8 PT
26	NSS	1	NOT SERVICED SEPARATELY, HOSE, 6.4 ID x 500 mm (1/4 ID x 19-11/16 in), Cut From 382997C2
27	NSS	1	NOT SERVICED SEPARATELY, HOSE, 6.4 ID x 600 mm (1/4 ID x 23-5/8 in), Cut From 382997C2
28	217-154	1	FITTING, 1/4" Hose X 1/4" NPTF Beaded, 1/4 stem x 1/4 PT
29	214-1307	4	CLAMP, HOSE, #7, 7/16", Spring, 7/16
30	NSS	1	NOT SERVICED SEPARATELY, HOSE, Cut From 429211A1
31	291207C1	1	CLAMP, Tie
32	214-1416	2	CLAMP, HOSE, #16, 0.81/1.50 Type F Worm, 13/16 - 1-1/2
33	NSS	1	NOT SERVICED SEPARATELY, HOSE, 6.4 ID x 1100 mm (1/4 ID x 43-19/64 in), Cut From 382997C2
34	242070A1	1	HOSE,
35	214-1308	3	CLAMP, HOSE, #8, 1/2", Spring, 1/2
36	440431A1	1	ELBOW, 3/4 PT x 1-3/16
37	201-342	1	ELBOW, 90є, 1 3/16"-12 x 1 3/16"-12 Fem Sw ORFS, 90 Degree Swivel, 1-3/16
38	87403836	1	TUBE,
39	515-21190	1	CLAMP, 3/4", Insul, 1/4" Bolt, 3/4 ID
40	844-6020	1	BOLT, Hex Flg, M6 x 20, 8.8,
41	87404840	1	SUPPORT, If Equipped, Used Without Trailer Brake
42	844-10025	2	BOLT, Hex Flg, M10 x 25, 8.8, Full Thd, M10 x 25; 8.8

MX285 CASE IH MAGNUM TRACTOR (NORTH AMERICA)

02-04 AIR INDUCTION SYSTEM - STANDARD DUTY

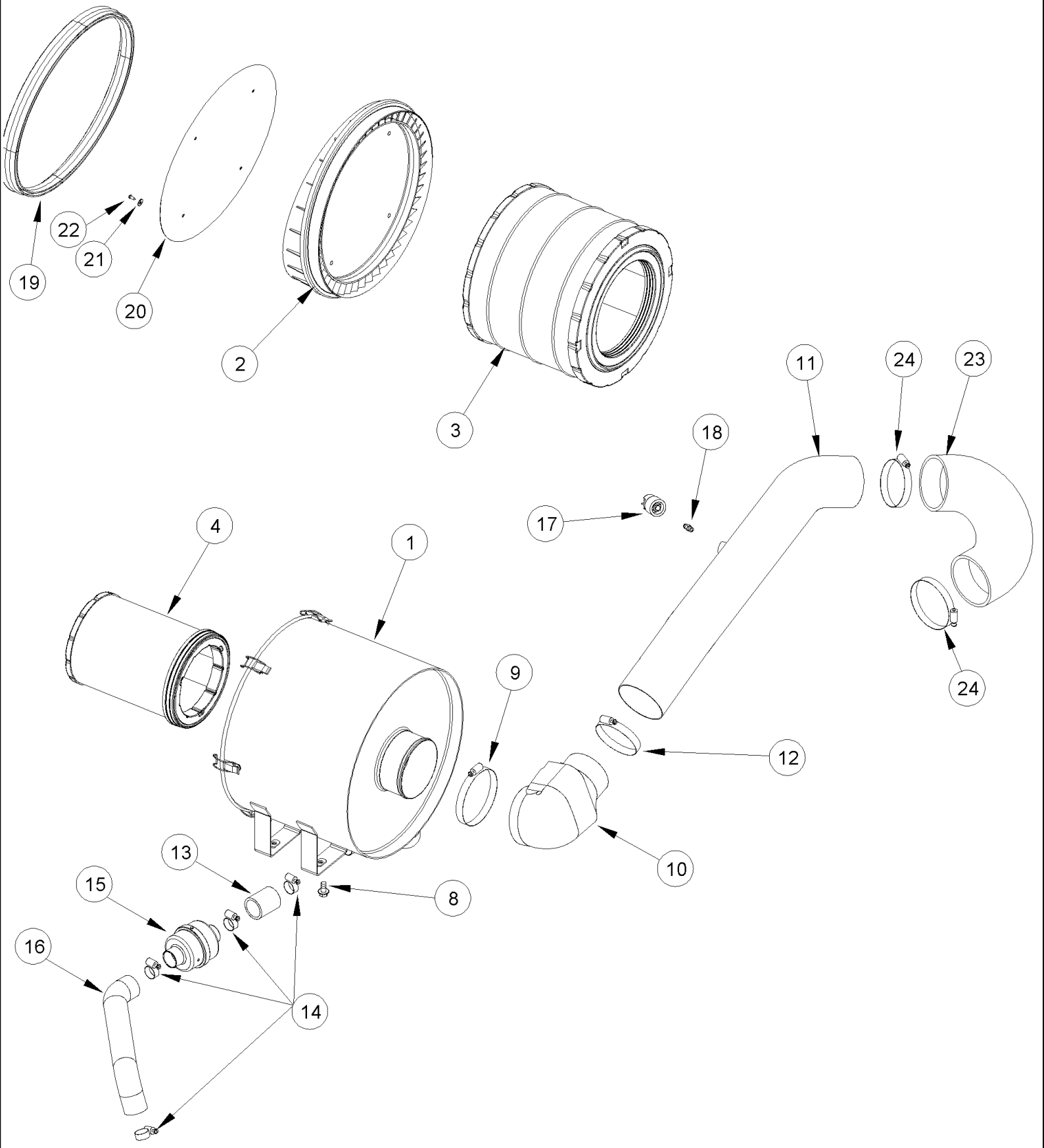

MX285 CASE IH MAGNUM TRACTOR (NORTH AMERICA)

02-04 AIR INDUCTION SYSTEM - STANDARD DUTY

ссылка	Номер детали	Кол-во	Описание
	291903A3	1	AIR CLEANER, Inc. 1 - 4
1	NSS	1	NOT SERVICED SEPARATELY, Body
2	294291A1	1	COVER,
3	294292A1	1	AIR CLEANER,
4	294293A1	1	AIR CLEANER,
8	844-10020	4	BOLT, Hex Flg, M10 x 20, 8.8,
9	214-3296	1	CLAMP, HOSE, 5.25/6.125 HD Worm, W/liner, 5-1/4 - 6-1/8
10	352790A1	1	DUCT,
11	352792A1	1	TUBE,
12	214-3280	1	CLAMP, HOSE, 5.25/5.125 HD Worm, W/liner, 4-1/4 - 5-1/8
13	414194A1	1	HOSE,
14	214-1424	4	CLAMP, HOSE, #24, 1.06/2.00 Type F Worm, 1-1/16 - 2
15	284427A1	1	VALVE,
16	414075A1	1	HOSE,
17	79081900	1	SWITCH, PRESSURE, Restriction
18	217-1079	1	CONNECTOR, HYD., 1/8"-27 NPTF, 1/8 PT
19	365829A1	1	SEAL,
20	282109A1	1	BAFFLE,
21	895-25005	4	WASHER, M5 x 15 x 1.6, 5,5 x 15 x 1,6 mm
22	760-14313	4	SCREW, SELF TAP, Pan Hd, M4.2 x 13, M4,2 x 13
23	297362A1	1	HOSE, LARGE,
24	214-3280	2	CLAMP, HOSE, 5.25/5.125 HD Worm, W/liner, 4-1/4 - 5-1/8

MX285 CASE IH MAGNUM TRACTOR (NORTH AMERICA)

02-05 AIR INDUCTION SYSTEM - SEVERE DUTY

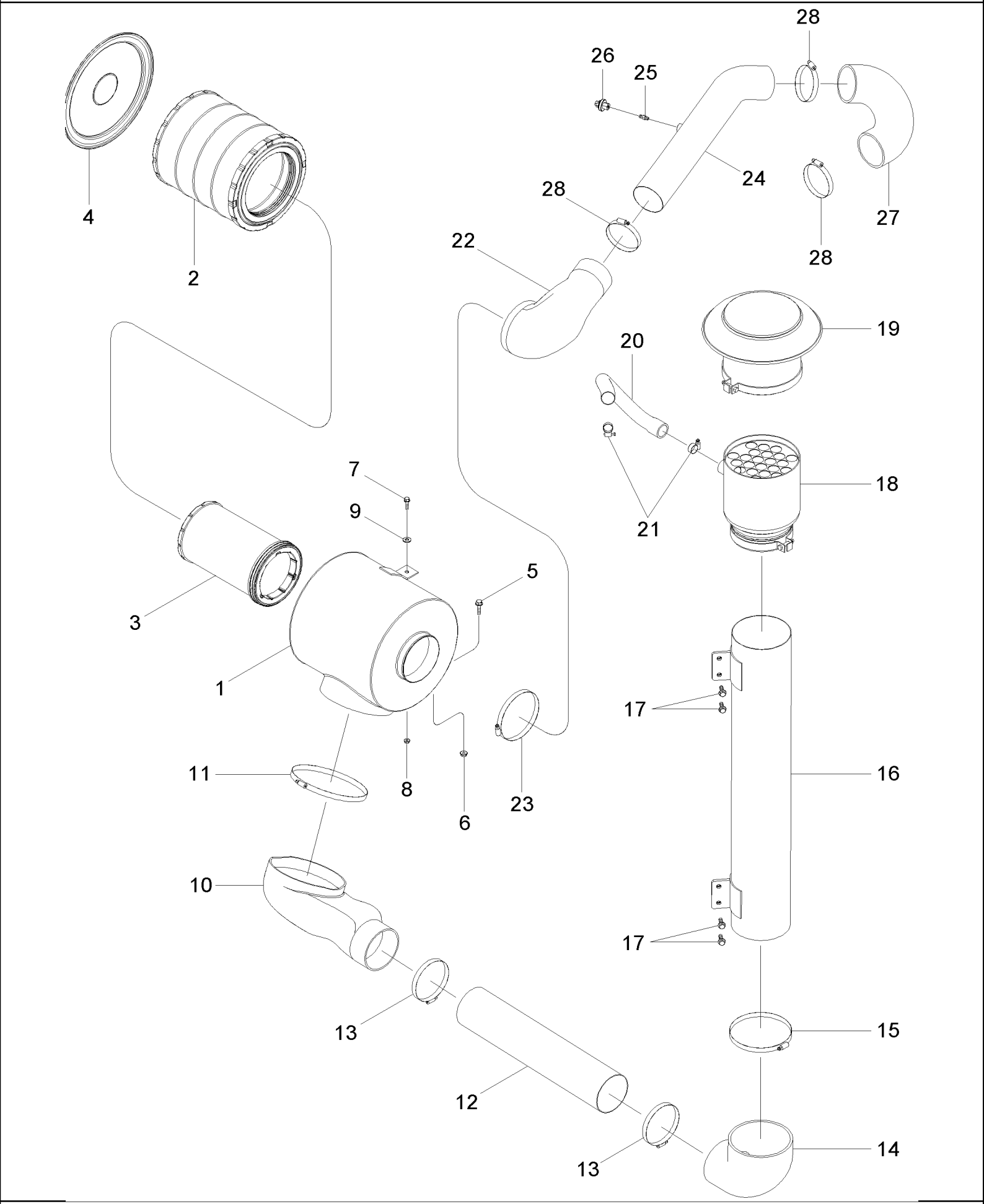

MX285 CASE IH MAGNUM TRACTOR (NORTH AMERICA)

02-05 AIR INDUCTION SYSTEM - SEVERE DUTY

ссылка	Номер детали	Кол-во	Описание
1	87410376	1	AIR CLEANER,
2	367349A1	1	FILTER, Primary
3	367350A1	1	FILTER, Secondary
4	379554A1	1	COVER,
5	844-10020	2	BOLT, Hex Flg, M10 x 20, 8.8,
6	825-2410	2	NUT, M10 x 1.5, Flg, Cl 8, M10
7	844-8030	1	BOLT, Hex Flg, M8 x 30, 8.8, Full Thd, M8 x 30; 8,8
8	825-2408	1	NUT, M8 x 1.25, Flg, Cl 8,
9	895-15010	UAR	WASHER, M11 x 24 x 2, 11 x 24 x 2 mm
10	87416128	1	DUCT, AIR,
11	214-31160	1	CLAMP, HOSE, 9.25/10.125 HD Worm, W/liner,
12	87410370	1	TUBE,
13	214-3296	2	CLAMP, HOSE, 5.25/6.125 HD Worm, W/liner,
14	87410367	1	HOSE, LARGE,
15	214-32128	1	CLAMP, HOSE, 7.25/8.125 HD Worm, W/liner,
16	87416138	1	TUBE,
17	844-10030	4	BOLT, Hex Flg, M10 x 30, 8.8, Full Thd, M10 x 30; 8,8
18	87426752	1	AIR CLEANER, Precleaner
19	87417755	1	COVER,
20	87425759	1	HOSE,
21	214-1424	2	CLAMP, HOSE, #24, 1.06/2.00 Type F Worm,
22	87409597	1	DUCT, AIR,
23	214-32112	1	CLAMP, HOSE, 6.25/7.125 HD Worm, W/liner,
24	87416130	1	TUBE,
25	217-1079	1	CONNECTOR, HYD., 1/8"-27 NPTF,
26	79081900	1	SWITCH, PRESSURE, Restriction
27	297362A1	1	HOSE, LARGE,
28	214-3280	3	CLAMP, HOSE, 5.25/5.125 HD Worm, W/liner,

MX285 CASE IH MAGNUM TRACTOR (NORTH AMERICA)

02-06 AFTERCOOLER

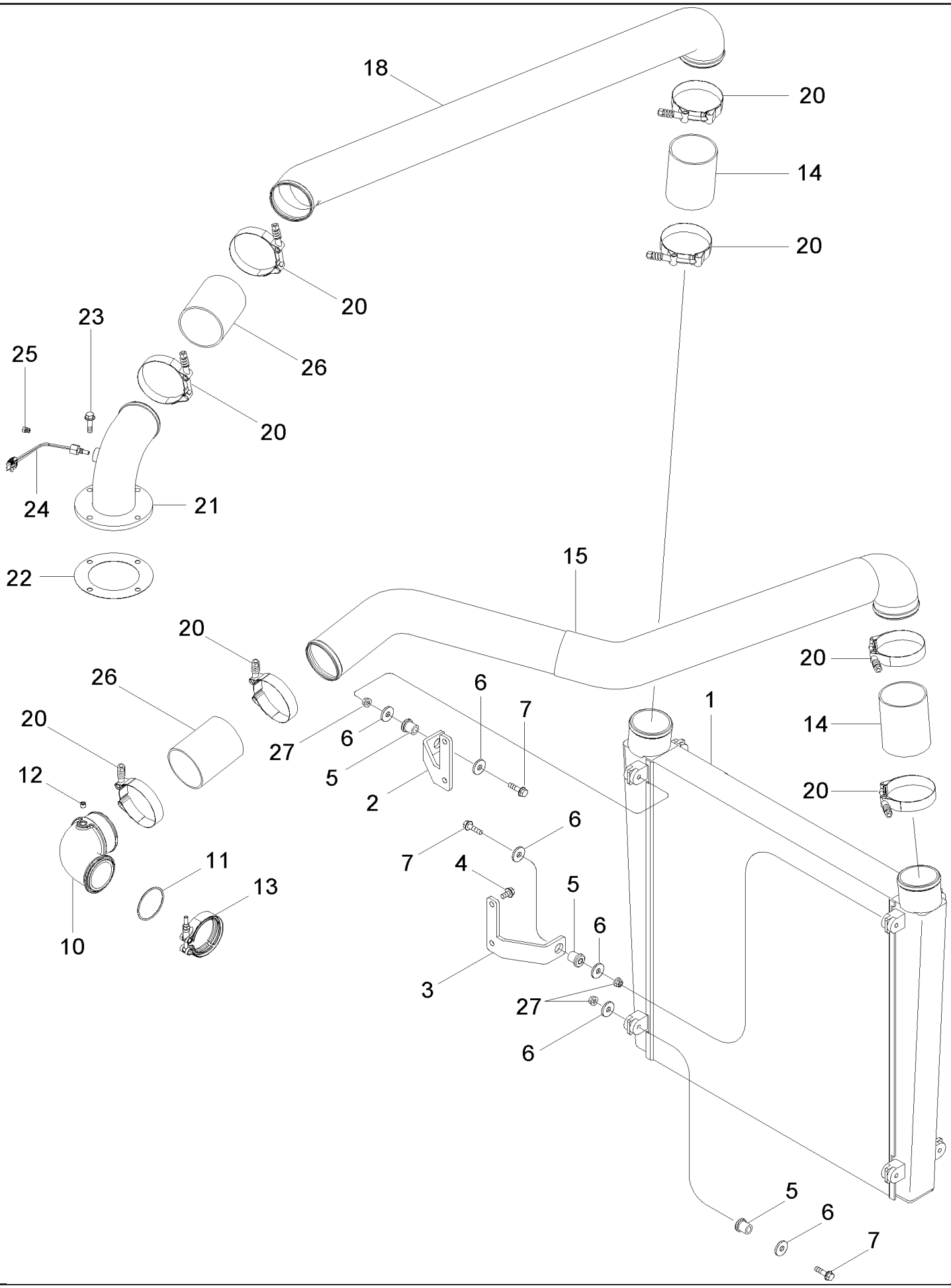

MX285 CASE IH MAGNUM TRACTOR (NORTH AMERICA)

02-06 AFTERCOOLER

ссылка	Номер детали	Кол-во	Описание
1	437249A1	1	COOLER, Air to Air
2	255646A1	1	SUPPORT, Left Hand
3	255645A1	1	SUPPORT, Right Hand
4	555-1	4	SCREW, Hex Flg, M8 x 16, 8.8, M8 x 16; 8.8
5	434177A1	4	MOUNTING, RUBBER,
6	495-81120	8	WASHER, .344" x 1 1/4" x .120", 11/32 x 1-1/4 x 7/64
7	814-8060	4	BOLT, Hex, M8 x 60, 8.8, M8 x 60; 8,8
10	J918685	1	PIPE,
11	J883284	1	SEAL,
12	J008465	1	PLUG,
13	J069053	1	CLAMP,
14	362341A1	2	HOSE,
15	414642A2	1	PIPE, , BSN JAZ135316
15	87444199	1	TUBE, , ASN JAZ135316
18	361992A2	1	PIPE,
20	364751A1	8	CLAMP,
21	220851A1	1	ELBOW,
22	J917892	1	GASKET,
23	844-8030	4	BOLT, Hex Flg, M8 x 30, 8.8, Full Thd, M8 x 30; 8.8
24	194346A1	1	SENSOR, Air to Air Temperature, MX210, MX230
25	86643151	1	PLUG, Hex Hd, 1/8"-27 NPTF, 1/8 PT, MX255, MX285
26	362341A1	2	HOSE,
27	825-5148	4	NUT, M8, Flg Ser,

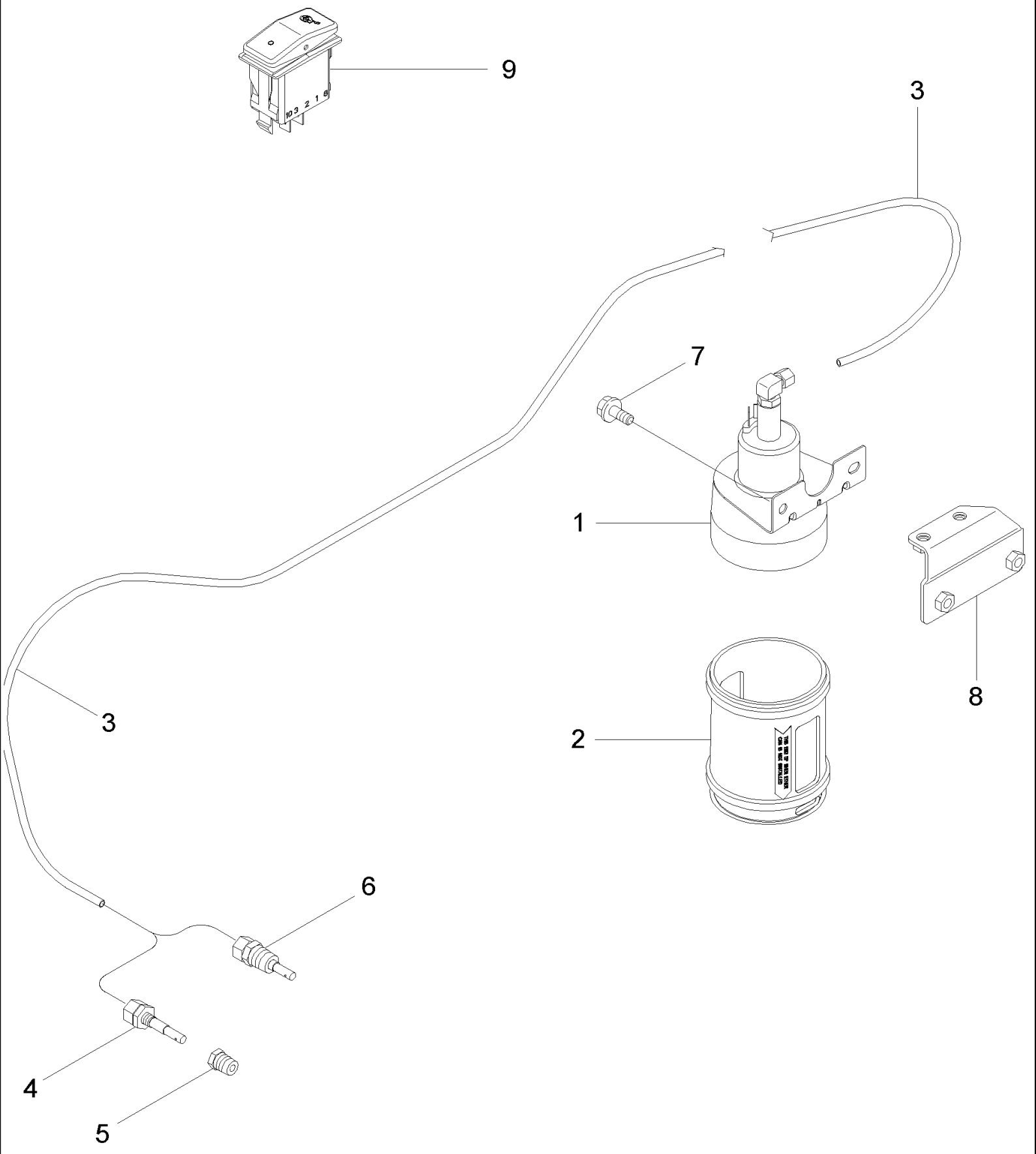
9
3
7
1
8
2
3
6
4
5

MX285 CASE IH MAGNUM TRACTOR (NORTH AMERICA)

02-07 ETHER START SYSTEM

ссылка	Номер детали	Кол-во	Описание
1	185552A2	1	SOLENOID, 12V, Inc. 2
2	190752A1	1	HOUSING,
3	A149932	1	TUBE, 2006 mm (79 in)
4	A172900	1	NOZZLE CAP, , MX210, MX230
5	217-40	1	REDUCER, 1/4"-18 NPTF x 1/8"-27 Fem NPTF, 1/4 x 1/8 PT, MX210, MX230
6	A145069	1	NOZZLE INJECTION, , MX255, MX285
7	243675A1	2	SCREW, M8 x 12
8	396829A1	1	BRACKET,
9	86989943	1	SWITCH, Ether Start

MX285 CASE IH MAGNUM TRACTOR (NORTH AMERICA)

02-08 EXHAUST SYSTEM

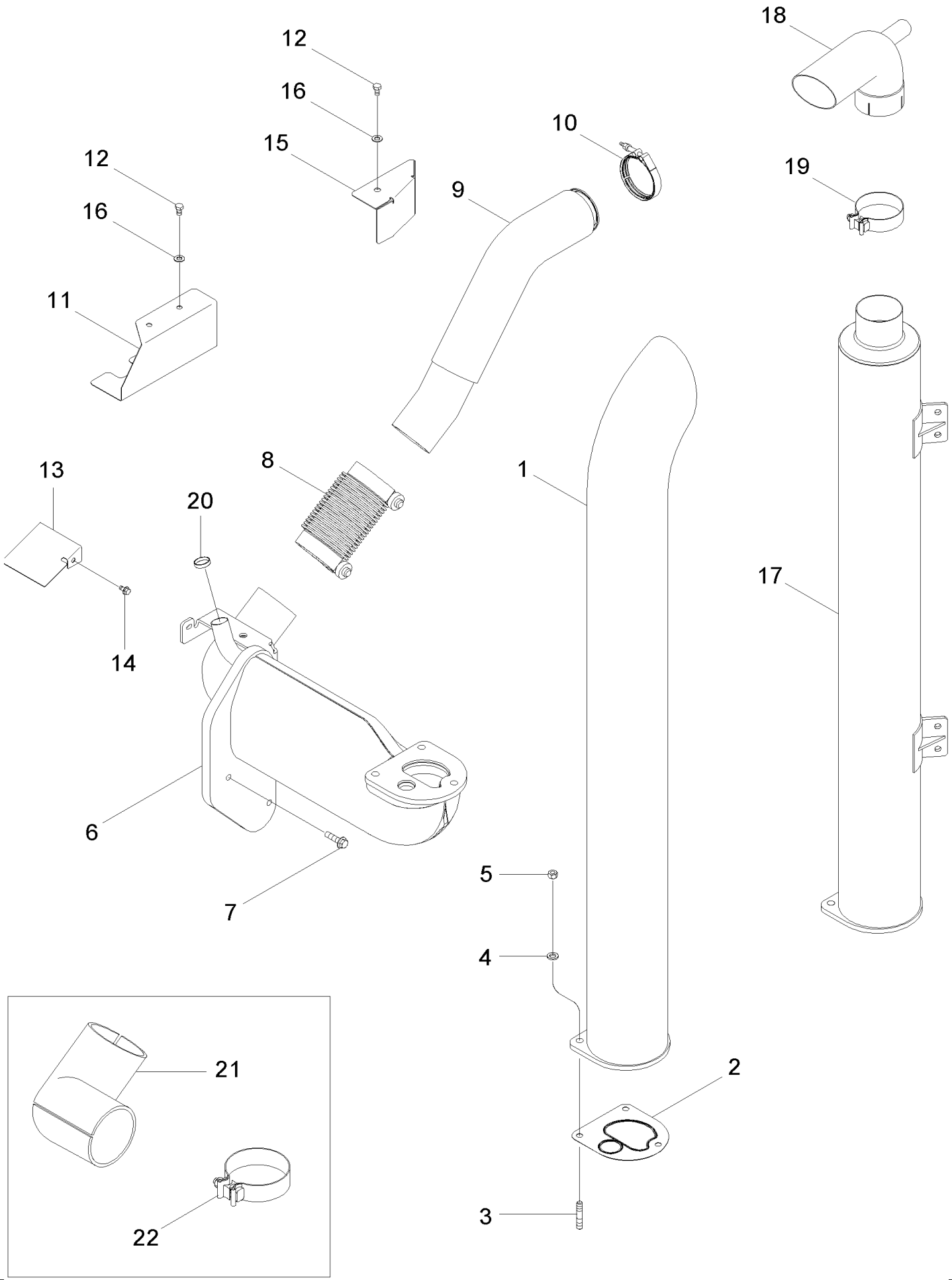

MX285 CASE IH MAGNUM TRACTOR (NORTH AMERICA)

02-08 EXHAUST SYSTEM

сылка	Номер детали	Кол-во	Описание
1	255270A4	1	MUFFLER, Standard
1	323648A1	1	MUFFLER, Spark Arrester, N.A. Only
2	226775A1	1	GASKET,
3	387795A1	3	STUD,
4	387798A1	3	WASHER,
5	387796A1	3	NUT,
6	318616A2	1	ELBOW,
7	828-12045	3	BOLT, Hex, M12 x 45, 10.9, Full Thd, M12 x 45; 10.9
8	242556A1	1	CONDUIT,
9	442323A1	1	TUBE ASSY., , MX210, MX230
9	444052A1	1	TUBE ASSY., , MX255, MX285
10	A170807	1	CLAMP, Inc. Hardware
11	251944A2	1	PROTECTION PLATE, Starter
12	614-10016	2	BOLT, Hex, M10 x 16, 8.8, Full Thd, M10 x 16
13	299201A2	1	PROTECTION PLATE, Brake Line
14	555-1	1	SCREW, Hex Flg, M8 x 16, 8.8, M8 x 16; 8.8
15	86983866	1	BRACKET,
16	844-10020	1	BOLT, Hex Flg, M10 x 20, 8.8,
17	87416132	1	MUFFLER, Severe Duty
18	87416127	1	EXTENSION,
19	131853A1	1	CLAMP,
20	41-1622	1	PLUG, Cup, 1 3/8", Stainless, Used with Severe Duty Muffler
	417631A1	1	KIT, Exhaust Elbow Insulation, Inc. 21, 22
21	414177A1	1	INSULATOR, Exhaust
22	86637711	2	CLAMP, HOSE, 5.25/5.125 HD Worm, W/liner,

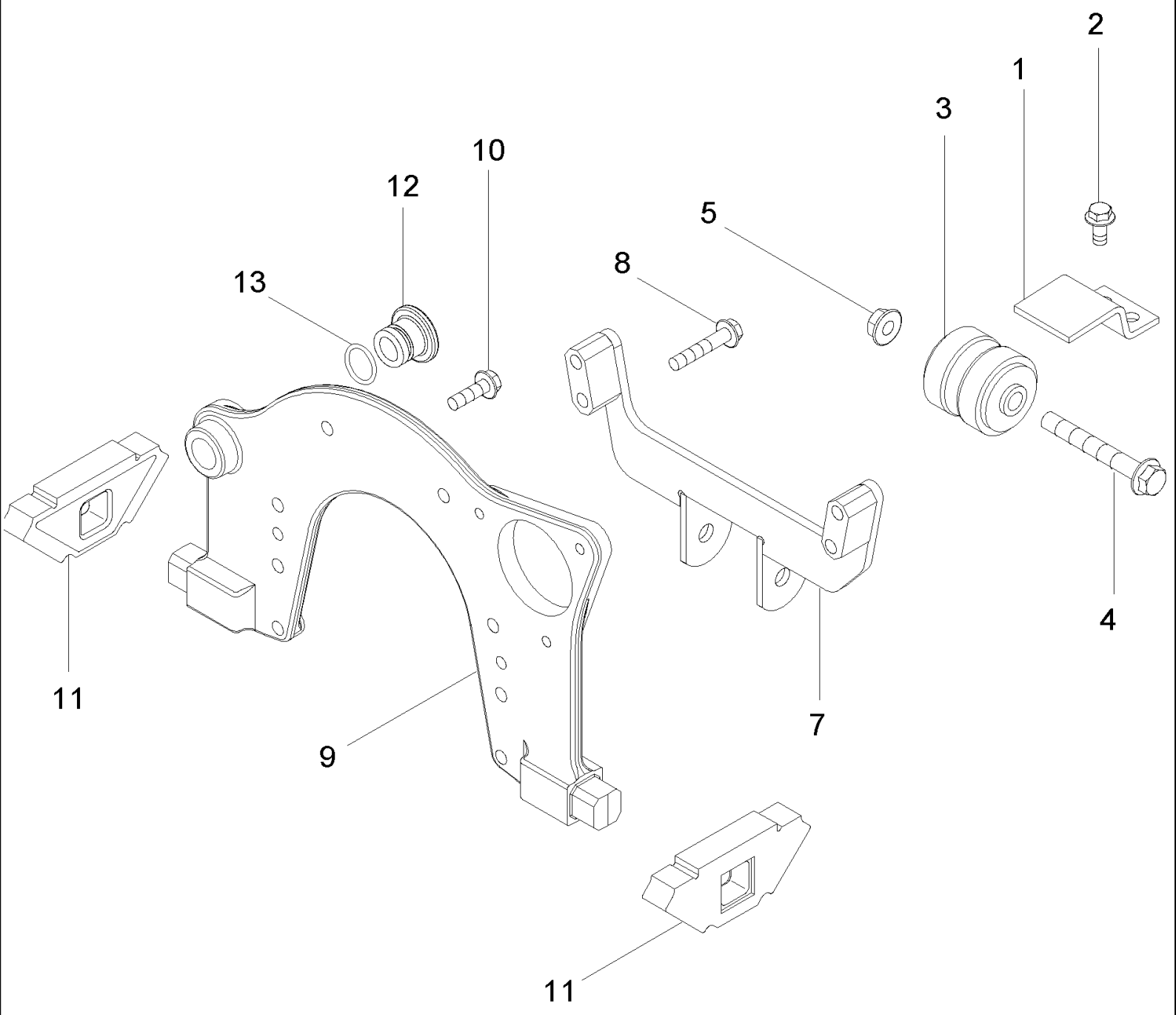
2
1
3
10
12
5
8
13
11
9
7
4
11

MX285 CASE IH MAGNUM TRACTOR (NORTH AMERICA)

02-09 ENGINE MOUNTING

ссылка	Номер детали	Кол-во	Описание
1	297527A1	1	CLAMP,
2	844-12025	2	BOLT, Hex Flg, M12 x 25, 8.8, M12 x 25; 8.8
3	247991A1	1	SHOCK ABSORBER,
4	854-16120	1	BOLT, Hex Flg, M16 x 120, 10.9, M16 x 120; 10.9
5	825-2416	1	NUT, M16 x 2, Flg, Cl 8, M16; 10.9
7	252701A4	1	SUPPORT,
8	854-12065	4	BOLT, Hex Flg, M12 x 65, 10.9, M12 x 65; 10.9
9	250718A3	1	SUPPORT,
10	854-12040	8	BOLT, Hex Flg, M12 x 40, 10.9, M12 x 40; 10.9
11	251991A1	2	SUPPORT,
12	J910248	1	PLUG,
13	238-5212	1	O-RING, -212, 70 Duro, .859" ID x .139" Thk,

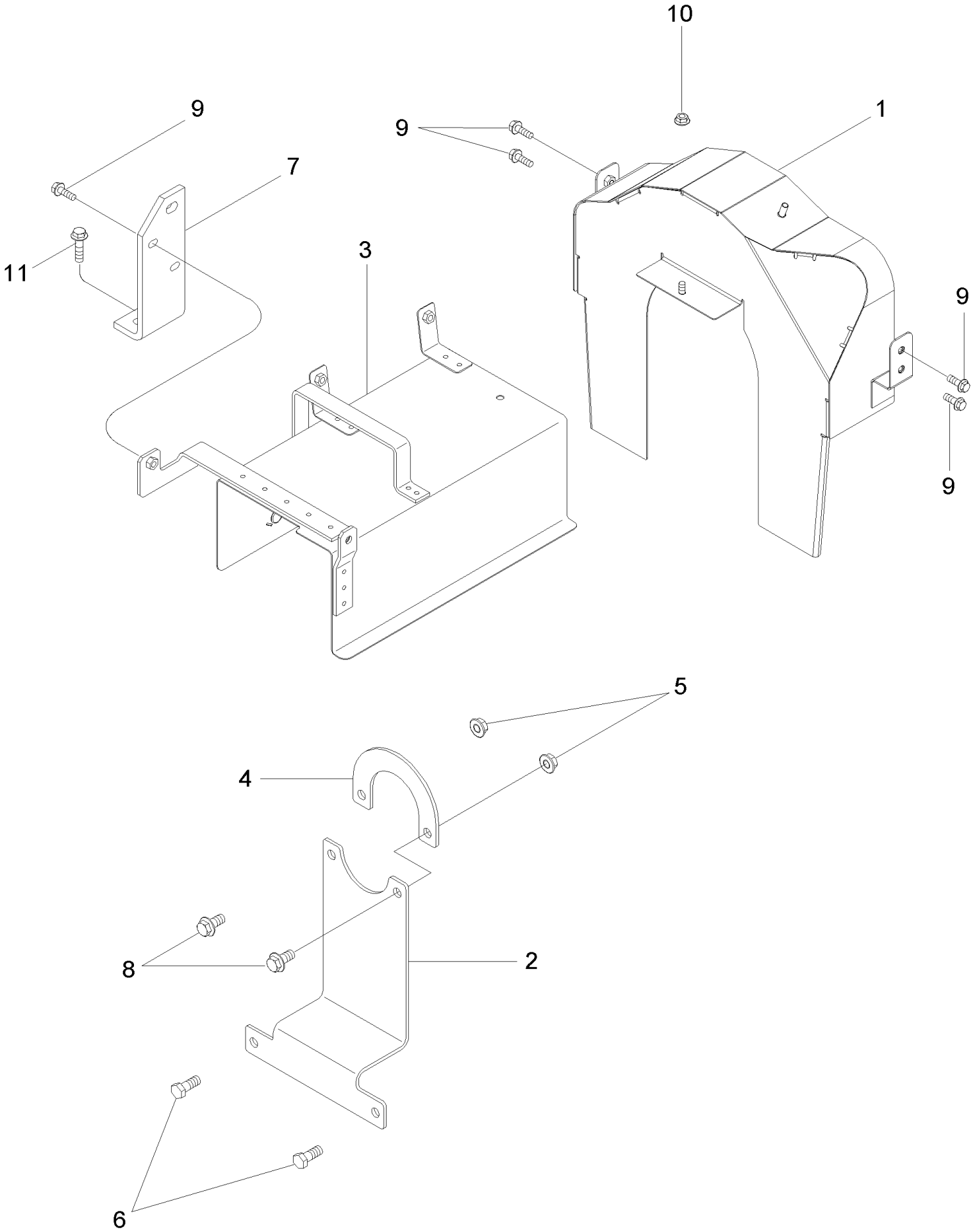
10
9
9
1
7
11
3
9
9
5
4
8
2
6

MX285 CASE IH MAGNUM TRACTOR (NORTH AMERICA)

02-10 FLYWHEEL SHIELDS

сылка	Номер детали	Кол-во	Описание
1	382150A1	1	PROTECTION PLATE,
2	382147A1	1	PROTECTION PLATE,
3	86984198	1	SHIELD, SPLASH,
4	382148A1	1	PROTECTION PLATE,
5	9804279	2	NUT, M12 x 1.75, Flg, Cl 8,
6	614-12030	2	BOLT, Hex, M12 x 30, 8.8, M12 x 30; 8.8
7	367682A1	1	BRACKET,
8	844-12025	2	BOLT, Hex Flg, M12 x 25, 8.8, M12 x 25; 8.8
9	844-8025	5	BOLT, Hex Flg, M8 x 25, 8.8, M8 x 25; 8.8
10	825-2408	1	NUT, M8 x 1.25, Flg, Cl 8,
11	854-12035	2	BOLT, Hex Flg, M12 x 35, 10.9, M12 x 35; 10.9

MX285 CASE IH MAGNUM TRACTOR (NORTH AMERICA)

02-12 WATER PUMP SYSTEM, MX255 AND MX285

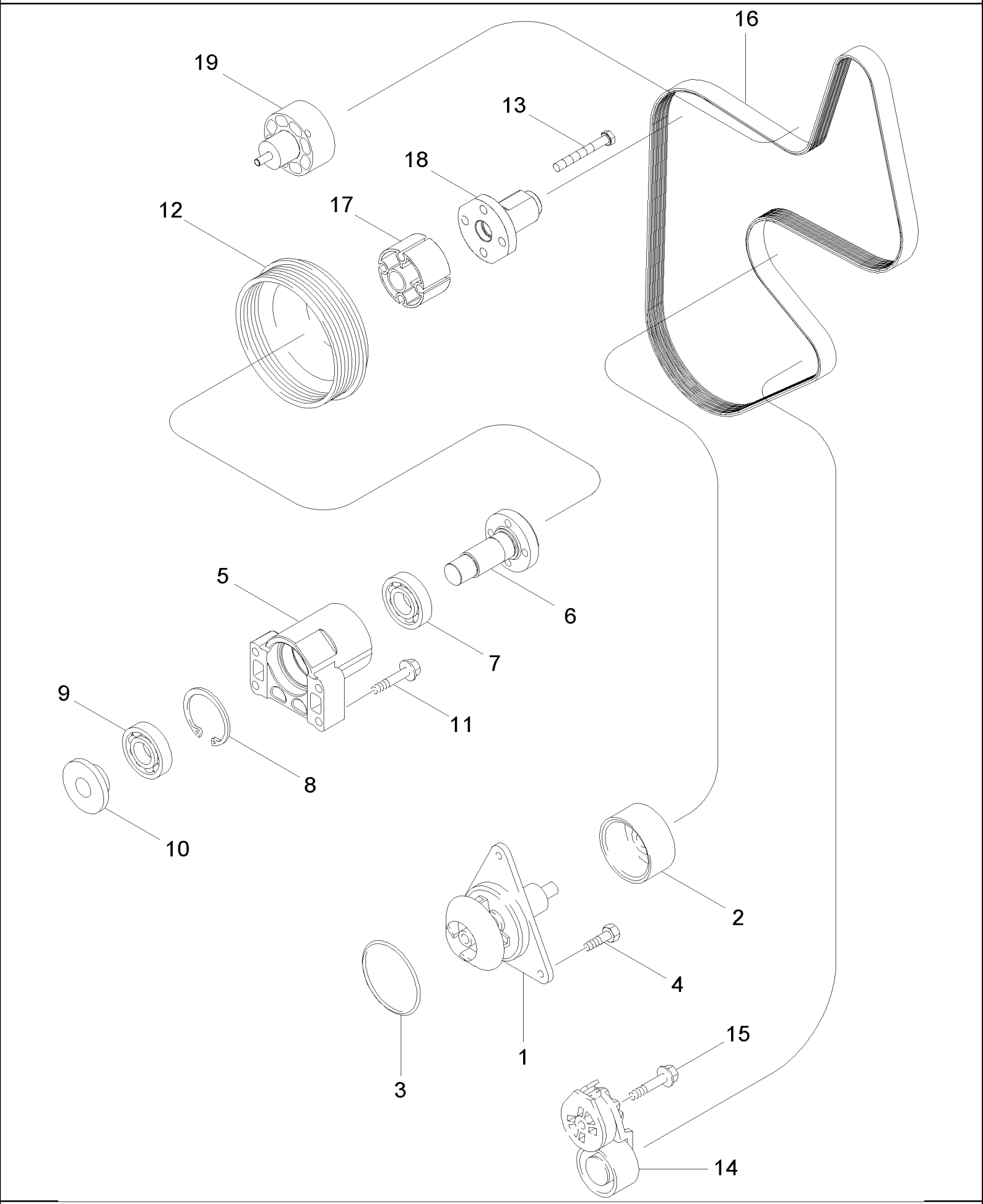

MX285 CASE IH MAGNUM TRACTOR (NORTH AMERICA)

02-12 WATER PUMP SYSTEM, MX255 AND MX285

ссылка	Номер детали	Кол-во	Описание
	J804927	1	PUMP, WATER, Water Pump, Inc.1 - 3
1	NSS	1	NOT SERVICED SEPARATELY, Pump
2	NSS	1	NOT SERVICED SEPARATELY, Pulley
3	238-5244	1	O-RING, -244, 70 Duro, 4.234" ID x .139" Thk,
4	J934054	3	BOLT, M8 x 28
	J945330	1	SUPPORT, Inc. 5 - 10
5	NSS	1	NOT SERVICED SEPARATELY, Support
6	J934104	1	HUB,
7	J933441	1	BEARING, BALL,
8	100-21244	1	RING, SNAP, 2.44", Int, #244,
9	J933440	1	BEARING, BALL,
10	J931016	1	RETAINER,
11	844-10050	4	BOLT, Hex Flg, M10 x 50, 8.8,
12	J914462	1	PULLEY,
13	844-10080	4	BOLT, Hex Flg, M10 x 80, 8.8, M10 x 80; 8.8
14	87409564	1	TENSIONER, BELT,
15	J282433	1	BOLT, M10 x 85
16	87402831	1	BELT,
17	D142327	1	SPACER,
18	446890A1	1	SHAFT, Fan Adapter
19	440140A1	1	PULLEY ASSY., Idler

MX285 CASE IH MAGNUM TRACTOR (NORTH AMERICA)

02-14 FRONT GEAR COVER, MX255 AND MX285

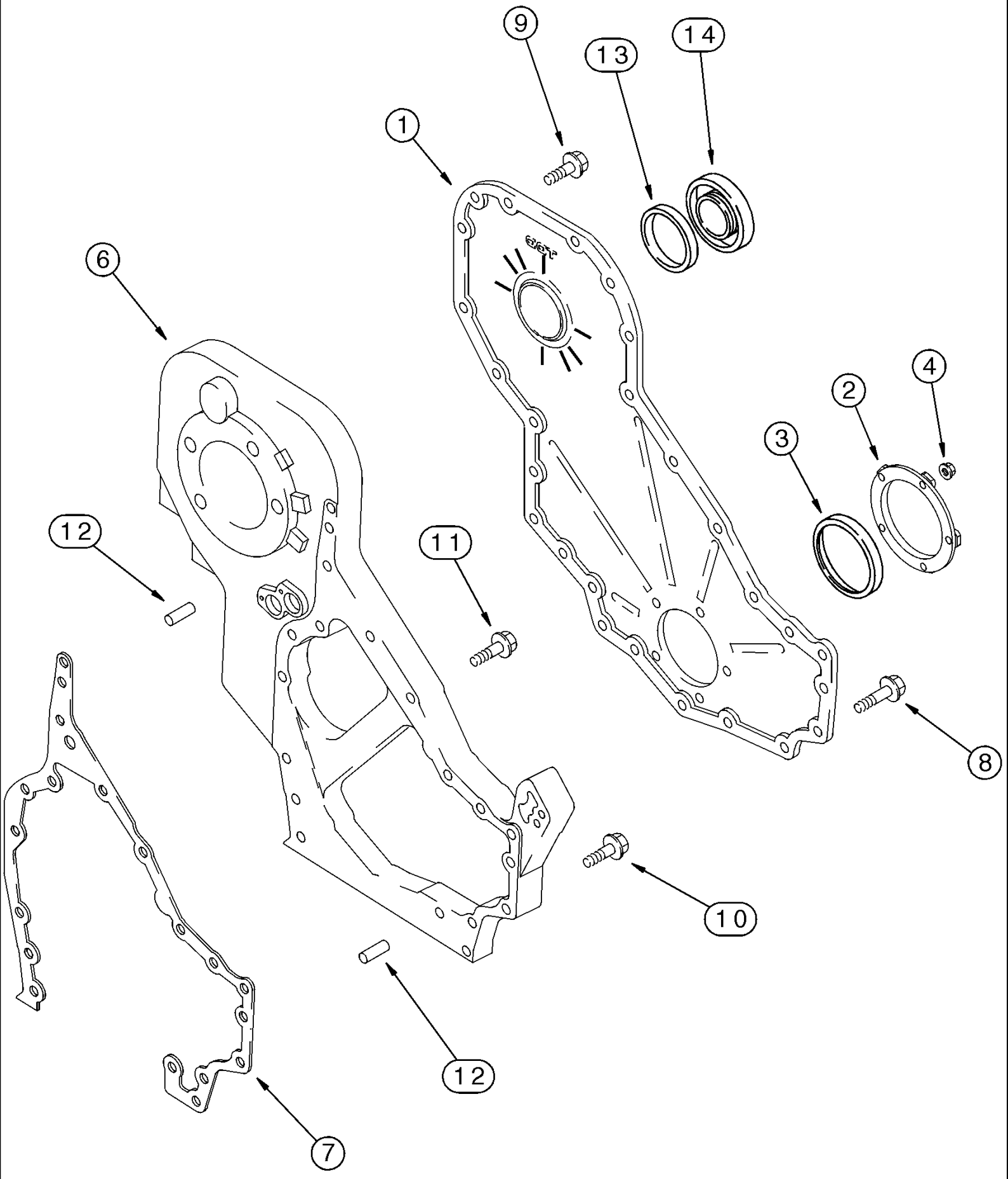

MX285 CASE IH MAGNUM TRACTOR (NORTH AMERICA)

02-14 FRONT GEAR COVER, MX255 AND MX285

сылка	Номер детали	Кол-во	Описание
1	J948043	1	COVER,
2	J941786	1	CARRIER,
3	NSS	1	NOT SERVICED SEPARATELY, Seal, Order A77790, A77808, See Figure 02-40
4	J938077	5	NUT, M6
5	J823494	1	SEALANT, 3 oz, Not Illustrated
6	J945852	1	TRANSMISSION HOUSING,
7	J944293	1	GASKET,
8	J926863	12	BOLT, M8 x 50
9	845-8016	14	BOLT, Hex Flg, M8 x 16, 8.8, Full Thd, M8 x 16; 8.8
10	J926846	3	BOLT, M8 x 20
11	J943885	4	BOLT, M8 x 40
12	J900257	2	PIN, 16 mm
13	J903475	1	SEAL,
14	J903463	1	COVER,

02-16 MANIFOLDS, MX255 AND MX285

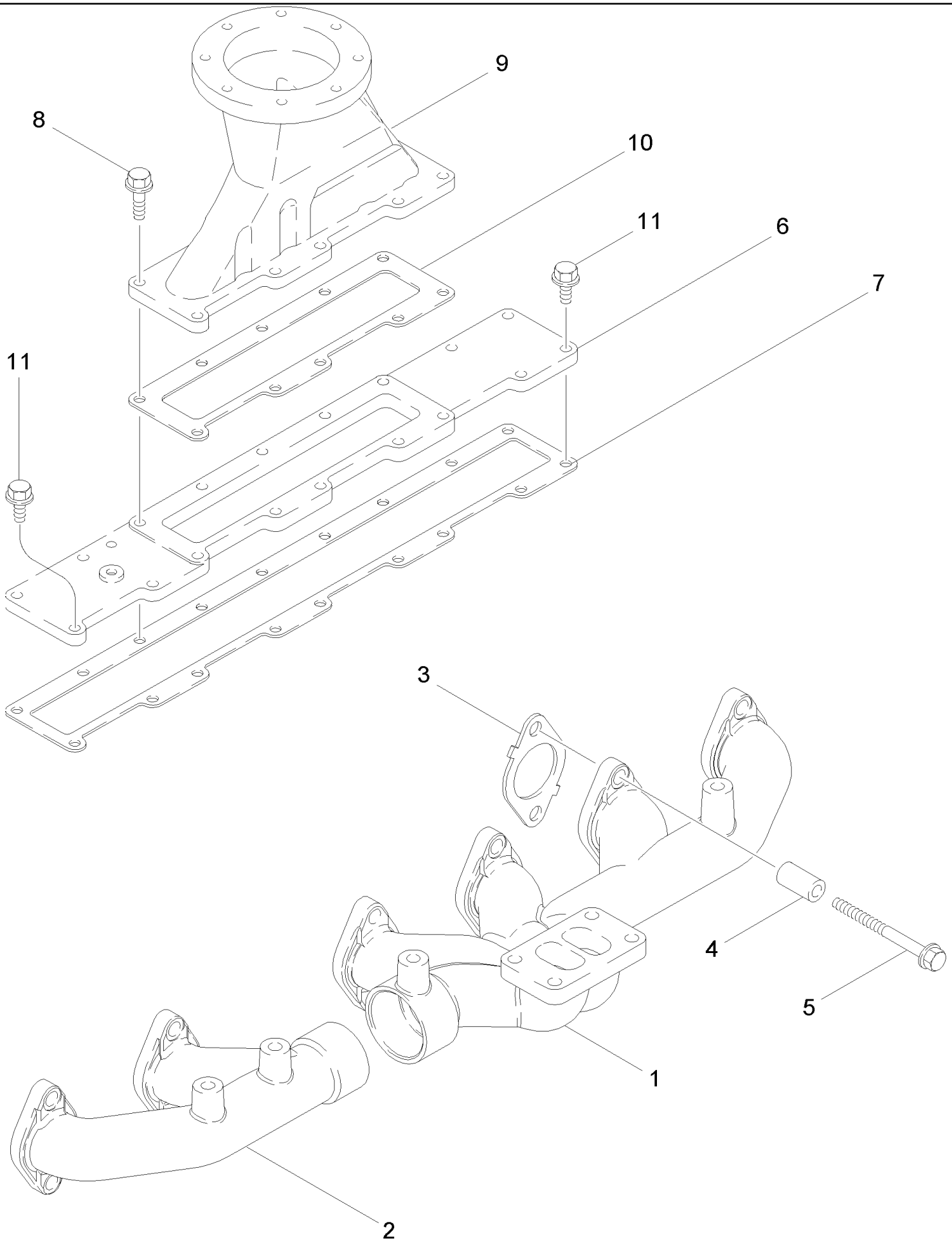

MX285 CASE IH MAGNUM TRACTOR (NORTH AMERICA)

02-16 MANIFOLDS, MX255 AND MX285

ссылка	Номер детали	Кол-во	Описание
1	J943841	1	MANIFOLD, EXHAUST, Exhaust
2	J937477	1	MANIFOLD,
3	J937479	6	GASKET, MANIFOLD,
4	J945252	12	SPACER, 35 mm (1-3/8 in)
5	J944593	12	BOLT, M8 x 165
6	J944342	1	COVER, Intake
7	J944646	1	GASKET, MANIFOLD,
8	844-8040	10	BOLT, Hex Flg, M8 x 40, 8.8, M8 x 40; 8,8
9	J943613	1	CONNECTOR, HYD.,
10	J944647	1	GASKET,
11	844-8030	3	BOLT, Hex Flg, M8 x 30, 8.8, Full Thd, M8 x 30; 8.8

02-18 TURBOCHARGER SYSTEM, MX255 AND MX285

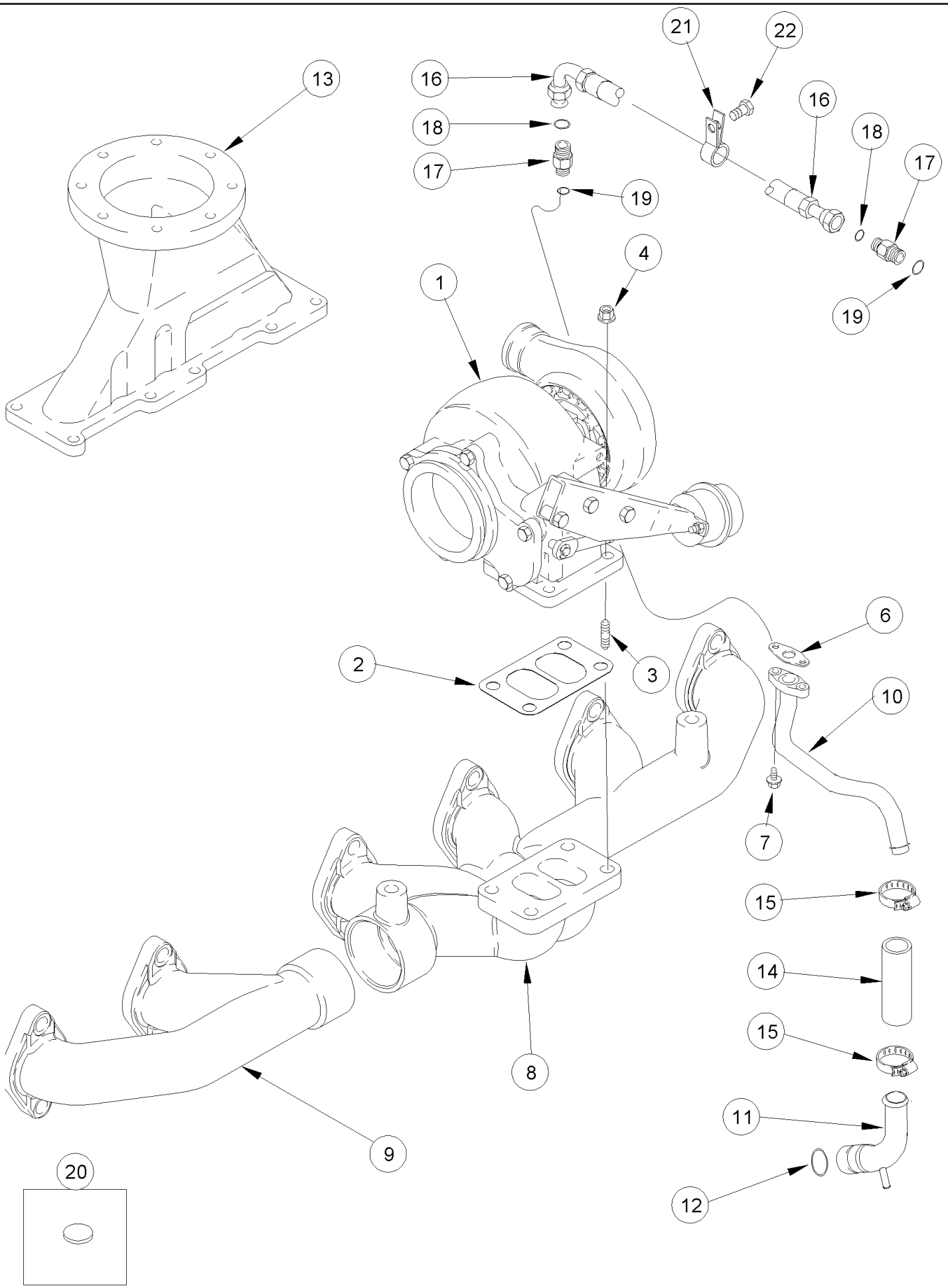

MX285 CASE IH MAGNUM TRACTOR (NORTH AMERICA)

02-18 TURBOCHARGER SYSTEM, MX255 AND MX285

ссылка	Номер детали	Кол-во	Описание
1	REF	1	INSTRUCTION, Turbocharger Assy, See Figure 02-20
2	J919369	1	GASKET,
3	J818823	4	STUD, M10 x 40
4	J818824	4	NUT, M10
6	J519807	1	GASKET,
7	845-8020	2	BOLT, Hex Flg, M8 x 20, 8.8, Full Thd, M8 x 20; 8.8
8	J943841	1	MANIFOLD, EXHAUST, , See Figure 02-16
9	J937477	1	MANIFOLD, , See Figure 02-16
10	J945108	1	TUBE,
11	J948079	1	TUBE, , BSN 46325445
11	87437056	1	TUBE, , ASN 46325445
12	86625099	1	O-RING, -018, Cl 7, .739" ID x .070" Thk,
13	J943613	1	CONNECTOR, HYD., , See Figure 02-16
14	J286499	1	HOSE, 76 mm (3 in)
15	214-1512	2	CLAMP, HOSE, #12, .69/1.25 Type F Worm, W/liner, 11/16 - 1-1/4
16	J282159	1	HOSE, FLEXIBLE,
17	J922789	2	CONNECTOR, HYD., Inc. 18, 19
18	J678603	1	O-RING, 9,3 mm ID x 2,2 mm
19	313262A1	1	SEAL, 9,2 mm ID x 1,7 mm
20	J920706	1	PLUG, 22 mm OD
21	515-23127	1	CLAMP, 1/2", Insul, 3/8" Bolt, 1/2 ID
22	615-8012	1	BOLT, Hex, M8 x 12, 8.8, Full Thd,

02-20 TURBOCHARGER ASSEMBLY, MX255 AND MX285

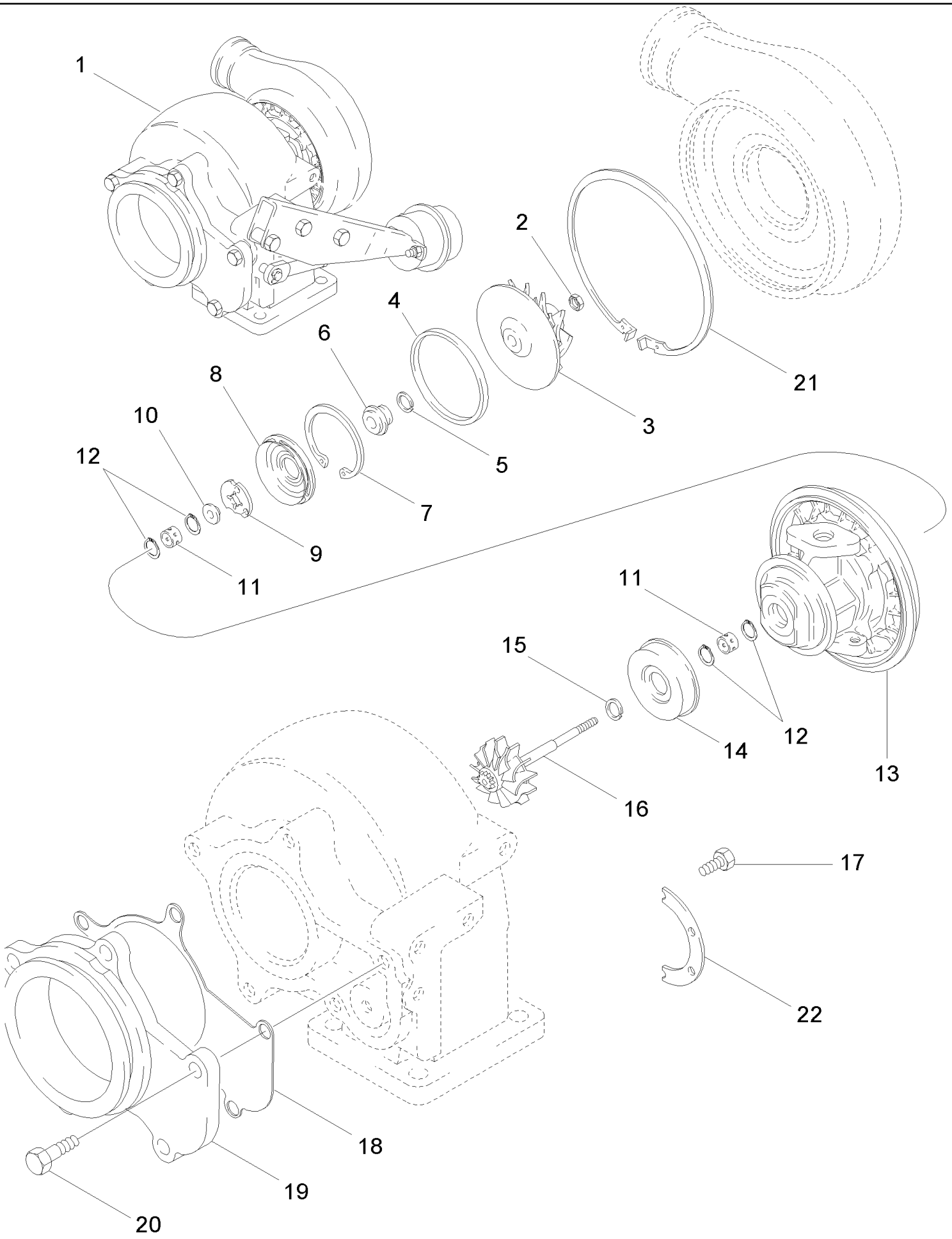

MX285 CASE IH MAGNUM TRACTOR (NORTH AMERICA)

02-20 TURBOCHARGER ASSEMBLY, MX255 AND MX285

ссылка	Номер детали	Кол-во	Описание
	JR800426	1	REMAN-TURBOCHARGER, Turbocharger, Remanufactured, Inc. JR590348, J519807, J919369, 237-6005, Not Illustrated
	JC590348	1	CORE-TURBOCHARGER,
	J800426	1	KIT, SERVICE, Turbocharger, Inc. J590348, J519807, J709861, 237-6005, Not Illustrated
	NSS	1	NOT SERVICED SEPARATELY, Turbocharger, Inc. 1 - 22, Also Inc. 1 - 15, See Figure 02-22
1	J591196	1	HOUSING, Center, Inc. 2 - 16
2	NSS	1	NOT SERVICED SEPARATELY, Nut
3	NSS	1	NOT SERVICED SEPARATELY, Impeller
4	NSS	1	NOT SERVICED SEPARATELY, Seal
5	NSS	1	NOT SERVICED SEPARATELY, Seal
6	NSS	1	NOT SERVICED SEPARATELY, Slinger
7	NSS	1	NOT SERVICED SEPARATELY, Ring
8	NSS	1	NOT SERVICED SEPARATELY, Baffle
9	NSS	1	NOT SERVICED SEPARATELY, Bearing, Thrust
10	NSS	1	NOT SERVICED SEPARATELY, Collar
11	NSS	2	NOT SERVICED SEPARATELY, Bearing, Journal
12	NSS	4	NOT SERVICED SEPARATELY, Ring
13	NSS	1	NOT SERVICED SEPARATELY, Housing
14	NSS	1	NOT SERVICED SEPARATELY, Shield
15	NSS	1	NOT SERVICED SEPARATELY, Seal
16	NSS	1	NOT SERVICED SEPARATELY, Rotor And Shaft
17	J759917	6	SET SCREW,
18	J537960	1	GASKET,
19	J537979	1	ADAPTER,
20	614-8020	5	BOLT, Hex, M8 x 20, 8.8, M8 x 20; 8,8
21	J533163	1	RING, SNAP,
22	J534309	2	PLATE,
	J575169	1	KIT, REPAIR, Overhaul, Inc. 2, 4, 5, 7, 8, 9, 11, 12, 15, 17

02-22 WASTEGATE ACTUATOR, MX255 AND MX285

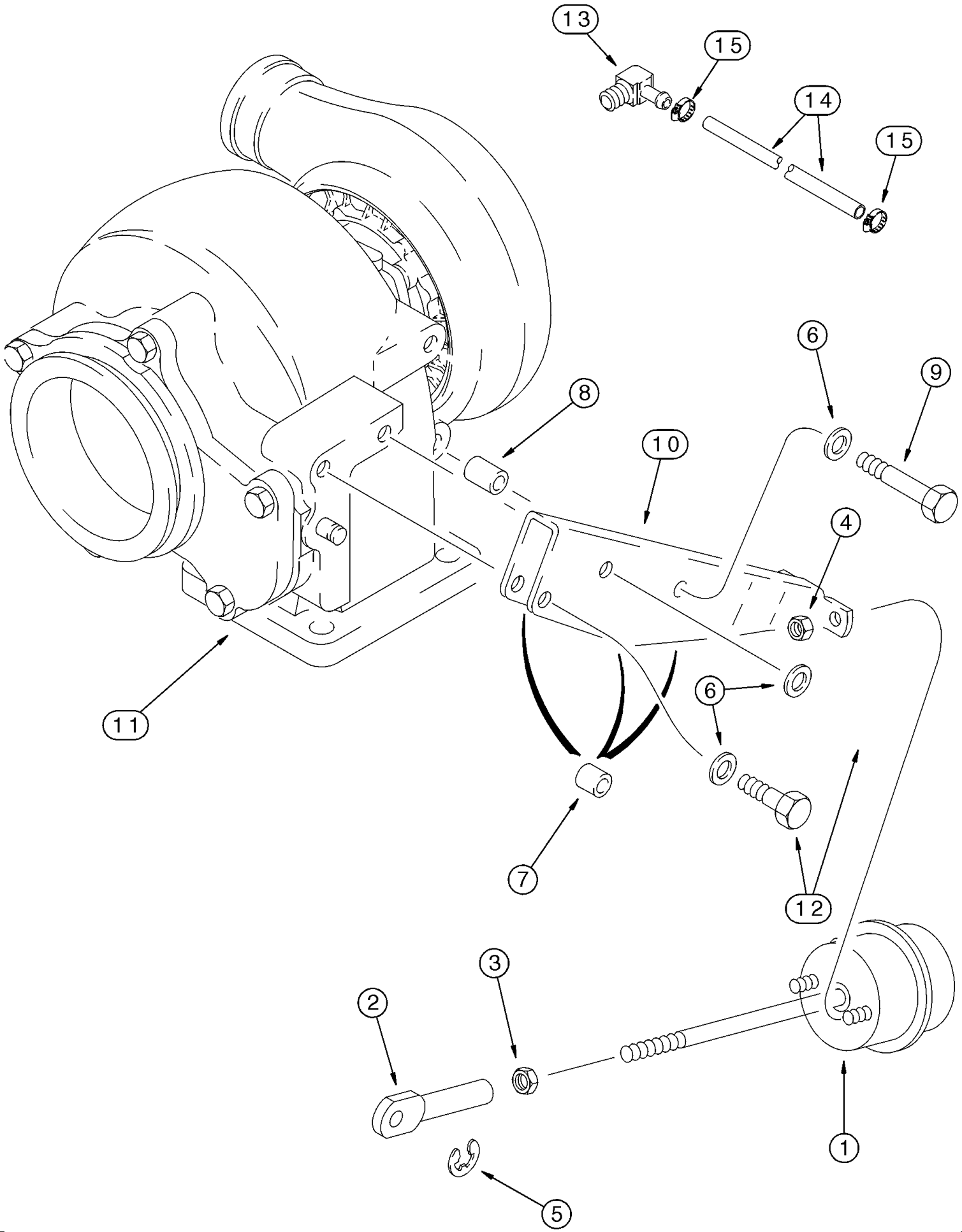

MX285 CASE IH MAGNUM TRACTOR (NORTH AMERICA)

02-22 WASTEGATE ACTUATOR, MX255 AND MX285

сылка	Номер детали	Кол-во	Описание
	REF	1	INSTRUCTION, Turbocharger Assy, Inc. 1 - 15, Also Inc. 2 - 22, See Figue 02-20
1	J594348	1	ACTUATOR,
2	J528177	1	LINK,
3	425-155	1	NUT, Jam, 5/16"-24, G5, 5/16 NF
4	J592050	2	NUT, LOCK,
5	J528221	1	RING, SNAP,
	NSS	1	NOT SERVICED SEPARATELY, Housing, Inc. 6 - 12
6	895-11008	3	WASHER, M8 x 16 x 1.6, 9 x 17 x 1,6 mm
7	J532195	3	SPACER, 13,6 mm
8	J532196	1	SPACER, 19 mm
9	814-8050	1	BOLT, Hex, M8 x 50, 8.8, M8 x 50; 8,8
10	J532671	1	BRACKET,
11	NSS	1	NOT SERVICED SEPARATELY, Housing
12	814-8035	2	BOLT, Hex, M8 x 35, 8.8, M8 x 35; 8,8
13	J528121	1	ELBOW,
14	A78037	1	HOSE,
15	214-1404	2	CLAMP, HOSE, #4, 0.25/0.62 Type M Worm, 1/4 - 5/8

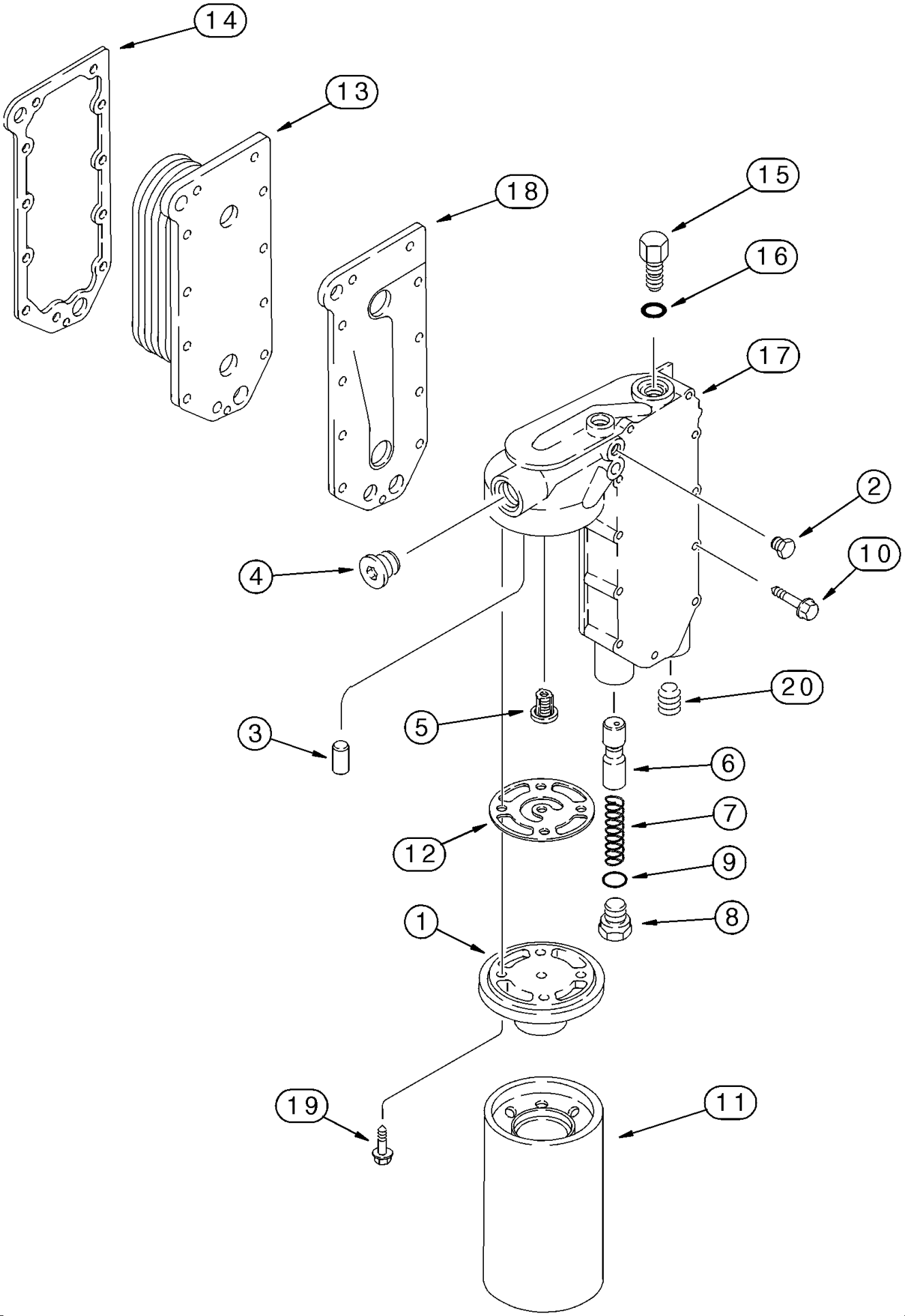
14
13
18
15
16
17
2
10
4
20
5
3
6
7
12
9
8
1
19
11

MX285 CASE IH MAGNUM TRACTOR (NORTH AMERICA)

02-24 FILTER AND COOLER - OIL, MX255 AND MX285

ссылка	Номер детали	Кол-во	Описание
1	J918334	1	HEAD, Filter
2	J906619	2	PLUG, 1/8 PT
3	A77722	1	PIN,
4	263136	1	PLUG, Hex Soc, 3/4"-14 NPTF, 3/4 PT
5	J936365	1	VALVE, PRESSURE RELIEF,
6	J945967	1	PLUNGER,
7	A77541	1	SPRING,
8	J931084	1	PLUG, 24 mm, Inc. 9
9	J930911	1	O-RING, 3/4 ID x 1/16
10	845-8065	11	BOLT, Hex Flg, M8 x 65, 8.8, M8 x 65
11	J919562	1	FILTER, ENGINE OIL,
12	J921605	1	GASKET,
13	J918175	1	CORE-OIL COOLER, , MX255
13	J944464	1	CORE-OIL COOLER, , MX285
14	J918174	1	GASKET,
	J934410	1	VALVE, Inc. 15, 16
15	NSS	1	NOT SERVICED SEPARATELY, Thermostat
16	A77724	1	O-RING,
17	J934159	1	COVER,
18	J929011	1	GASKET,
19	J907860	4	BOLT, M8 x 25
20	221-1034	1	PLUG, Sq Soc, 1/2" MPTF, 1/2 PT

MX285 CASE IH MAGNUM TRACTOR (NORTH AMERICA)

02-25 OIL PUMP AND OIL PAN

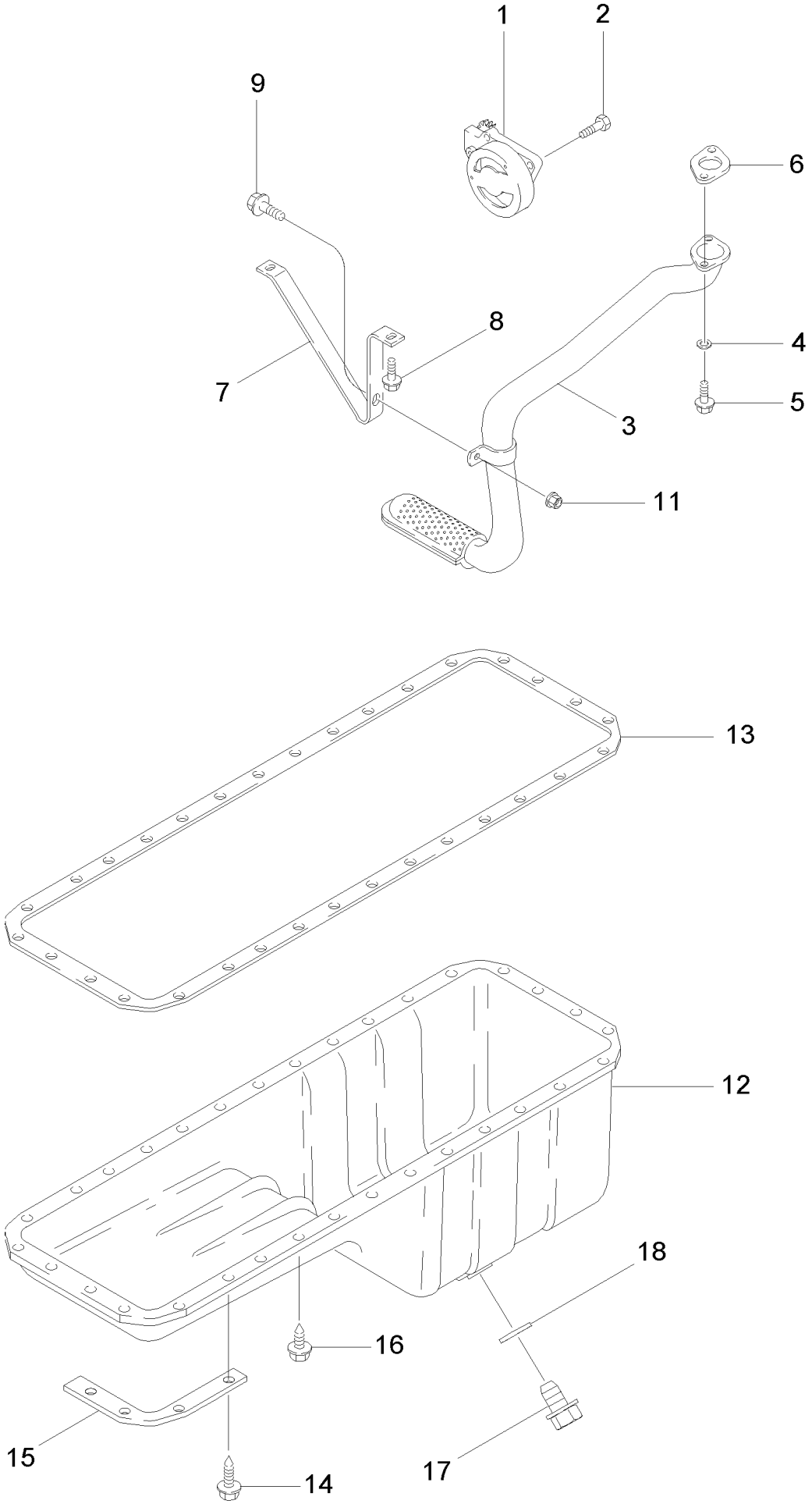

MX285 CASE IH MAGNUM TRACTOR (NORTH AMERICA)

02-25 OIL PUMP AND OIL PAN

сылка	Номер детали	Кол-во	Описание
1	J948072	1	PUMP, ENGINE OIL, New
1	JR948072	1	REMAN-PUMP, ENGINE OIL, Remanufactured, N.A. Only
1	JC948072	1	CORE-PUMP, ENGINE OIL,
2	J900677	4	BOLT, M8 x 30
3	J928828	1	TUBE ASSY.,
4	J926865	2	SPACER,
5	845-6030	2	BOLT, Hex Flg, M6 x 30, 8.8, M6 x 30
6	J914302	1	GASKET,
7	J927611	1	BRACE,
8	845-6015	2	BOLT, Hex Flg, M6 x 15, 8.8, Full Thd, M6 x 15; 8.8
9	845-6020	1	BOLT, Hex Flg, M6 x 20, 8.8, Full Thd, M6 x 20; 8.8
11	J906216	1	NUT, M6
12	J933347	1	PAN, ENGINE OIL,
13	J938160	1	GASKET, Oil Pan
14	J907860	16	BOLT, M8 x 25
15	87414461	4	SUPPORT,
16	J920400	16	BOLT, M8 x 21
17	J924147	1	PLUG, M18
18	J920773	1	WASHER, SEALING,

02-28 CYLINDER HEAD - COVER, MX255 AND MX285

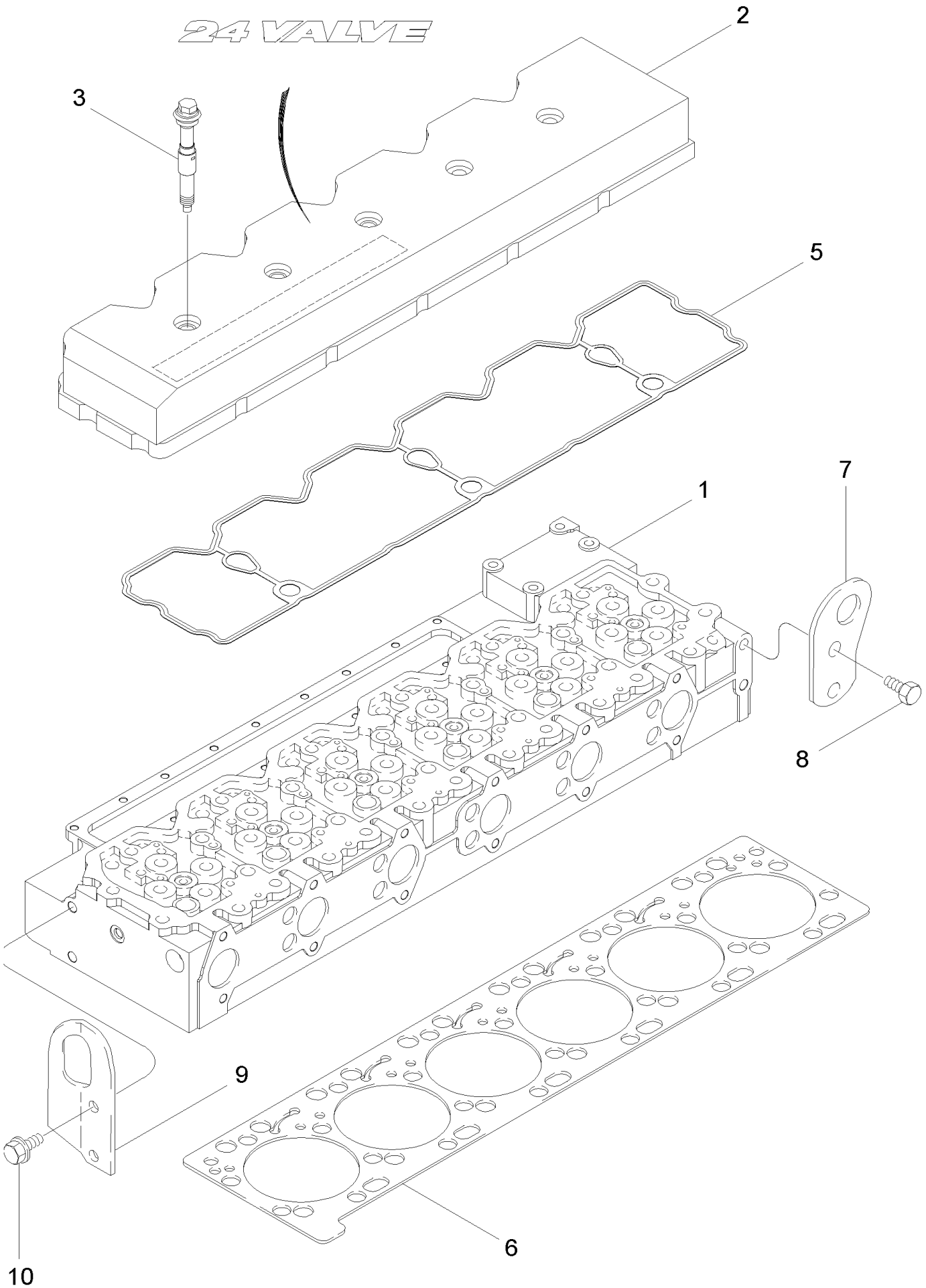

MX285 CASE IH MAGNUM TRACTOR (NORTH AMERICA)

02-28 CYLINDER HEAD - COVER, MX255 AND MX285

ссылка	Номер детали	Кол-во	Описание
1	REF	1	INSTRUCTION, Head, Cylinder, See Figure 02-30
2	J938445	1	COVER, VALVE,
3	J990876	5	ISOLATOR,
5	J939284	1	GASKET,
6	J943366	1	GASKET, CYLINDER HEAD,
7	J944239	1	BRACKET, Front
8	614-12025	2	BOLT, Hex, M12 x 25, 8.8, M12 x 25; 8,8
9	J944290	1	BRACKET, Rear
10	844-12025	2	BOLT, Hex Flg, M12 x 25, 8.8, M12 x 25; 8.8

02-30 CYLINDER HEAD - VALVE MECHANISM, MX255 AND MX285

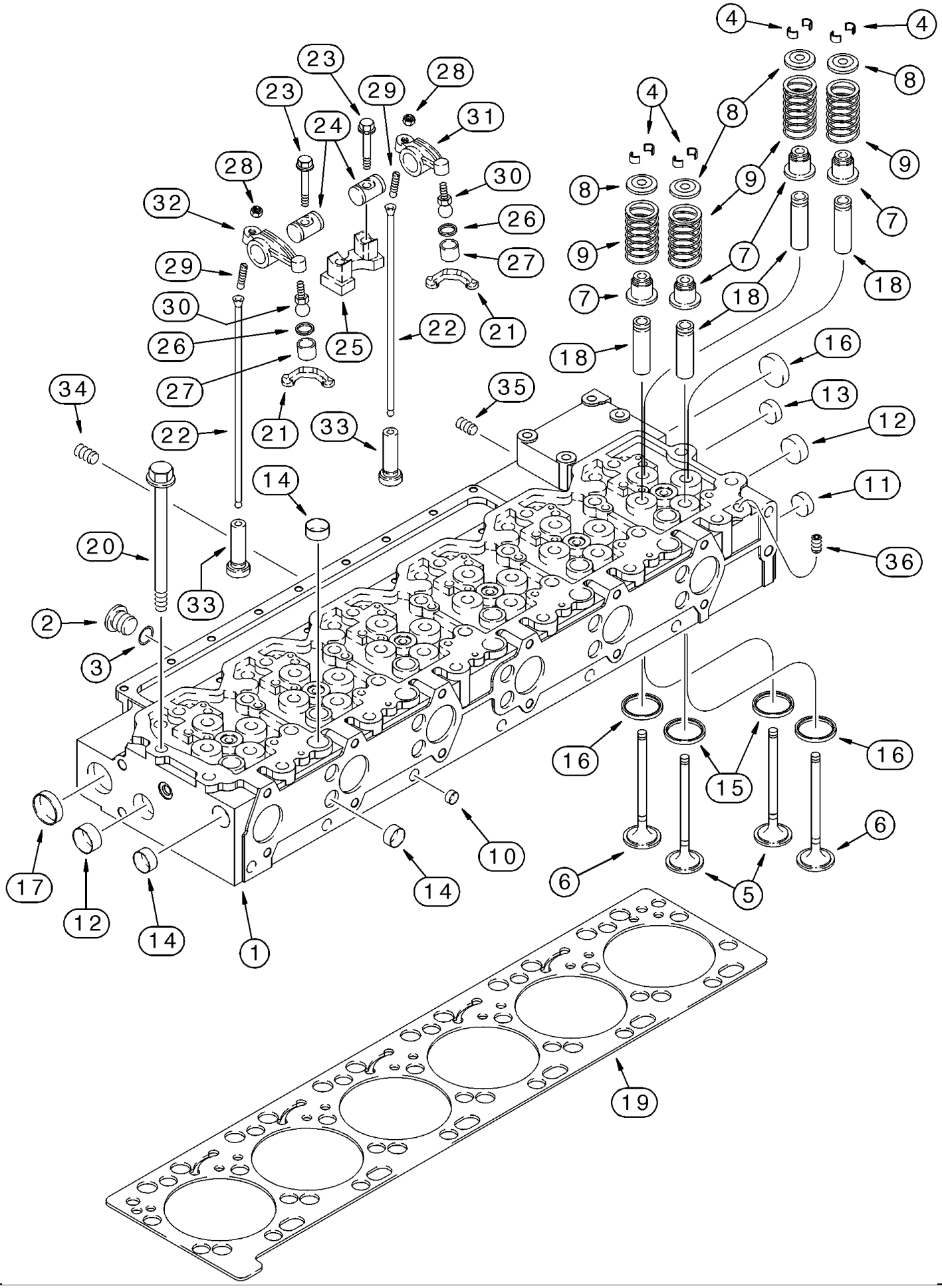

MX285 CASE IH MAGNUM TRACTOR (NORTH AMERICA)

02-30 CYLINDER HEAD - VALVE MECHANISM, MX255 AND MX285

ссылка	Номер детали	Кол-во	Описание
	JR948583	1	REMAN-CYLINDER HEAD, Cylinder, Remanufactured, N.A. Only
	JC948583	1	CORE-CYLINDER HEAD,
	J948583	1	CYLINDER HEAD, Cylinder, With Valves, Inc. 1 - 18
1	J945022	1	CYLINDER HEAD, Cylinder, Without Valves, Inc. 10 - 18
2	J678923	1	PLUG, Inc. 3
3	637-72081	1	O-RING, CI 7, 8.1MM ID x 1.6 Thk, 8,1 ID x 1,6 mm
4	J900250	48	SCREW,
5	J942588	12	VALVE, ENGINE, INLET, STD,
6	J942589	12	VALVE, ENG EXHAUST, STD,
7	J943888	24	SEAL, Valve
8	J944452	24	RETAINER,
9	J944711	24	SPRING, Valve
10	A77552	6	PLUG, 11,5 mm
11	A77590	2	PLUG, 28,7 mm
12	J900955	1	PLUG, 10 mm OD
13	J907555	1	PLUG, 1/4-18 PT
14	J920706	17	PLUG, 22 mm OD
15	J940152	12	INSERT, Intake
16	J940153	12	INSERT, Exhaust
17	41-1024	2	PLUG, Cup, 1 1/2", 1-1/2
18	J948102	24	GUIDE, VALVE,
19	J943366	1	GASKET, CYLINDER HEAD,
20	J917728	26	BOLT, 160 mm
21	J943445	12	VALVE,
22	J944174	12	ROD, PUSH,
23	J943933	12	SCREW, 68 mm
24	J941137	12	SHAFT,
25	J941140	6	SUPPORT,
	J942748	6	ROCKER ARM, Intake, Inc. 26 - 31
	J942749	6	ROCKER ARM, Exhaust, Inc. 26 - 30, 32
26	NSS	1	NOT SERVICED SEPARATELY, Retainer
27	NSS	1	NOT SERVICED SEPARATELY, Socket
28	A77902	1	NUT, 3/8 - 24 NF
29	J991067	1	SCREW,
30	NSS	1	NOT SERVICED SEPARATELY, Ball
31	NSS	1	NOT SERVICED SEPARATELY, Lever, Intake
32	NSS	1	NOT SERVICED SEPARATELY, Lever, Exhaust
33	J945866	12	TAPPET,
34	A77505	4	PLUG, 3/4 PT
35	A77429	7	PLUG, 1/2 PT
36	A77428	1	PLUG, 1/4 PT

02-31 THERMOSTAT - FILTER, WATER

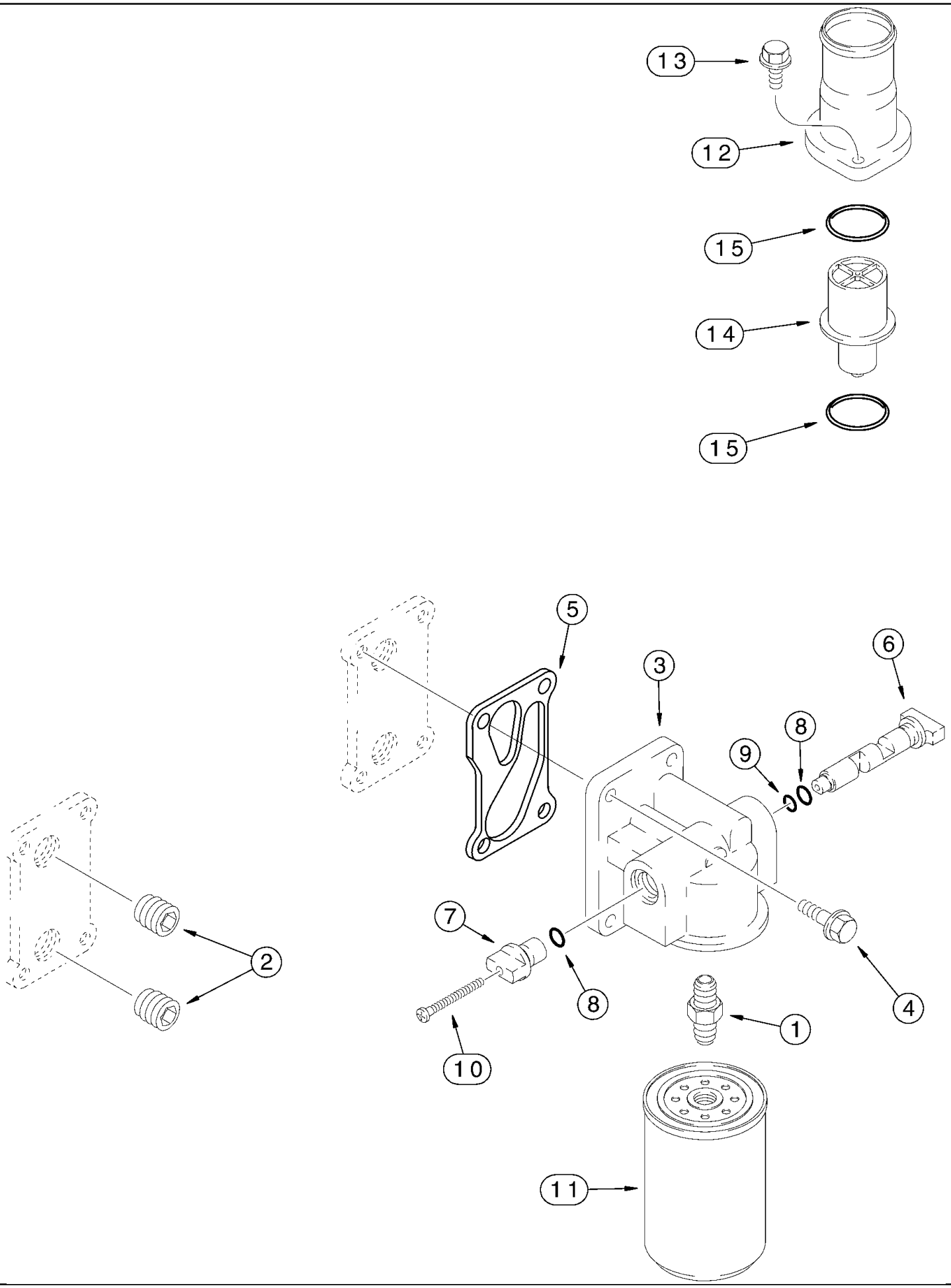

MX285 CASE IH MAGNUM TRACTOR (NORTH AMERICA)

02-31 THERMOSTAT - FILTER, WATER

ссылка	Номер детали	Кол-во	Описание
1	A77623	1	ADAPTER,
2	263136	2	PLUG, Hex Soc, 3/4"-14 NPTF, 3/4 PT
3	J943738	1	HEAD,
4	845-8025	4	BOLT, Hex Flg, M8 x 25, 8.8, M8 x 25; 8.8
5	J937367	1	GASKET,
6	J943739	1	VALVE, SHUT-OFF,
7	J943740	1	VALVE, SHUT-OFF,
8	238-5111	2	O-RING, -111, 70 Duro, .424" ID x .103" Thk,
9	238-5013	1	O-RING, -013, 70 Duro, .426" ID x .070" Thk,
10	J944454	1	SCREW,
11	J100304	1	ELEMENT,
12	J944429	1	CONNECTOR, ELEC,
13	845-8025	2	BOLT, Hex Flg, M8 x 25, 8.8, M8 x 25; 8.8
14	J940632	1	THERMOSTAT,
15	238-5227	2	O-RING, -227, 70 Duro, 2.109" ID x .139" Thk,

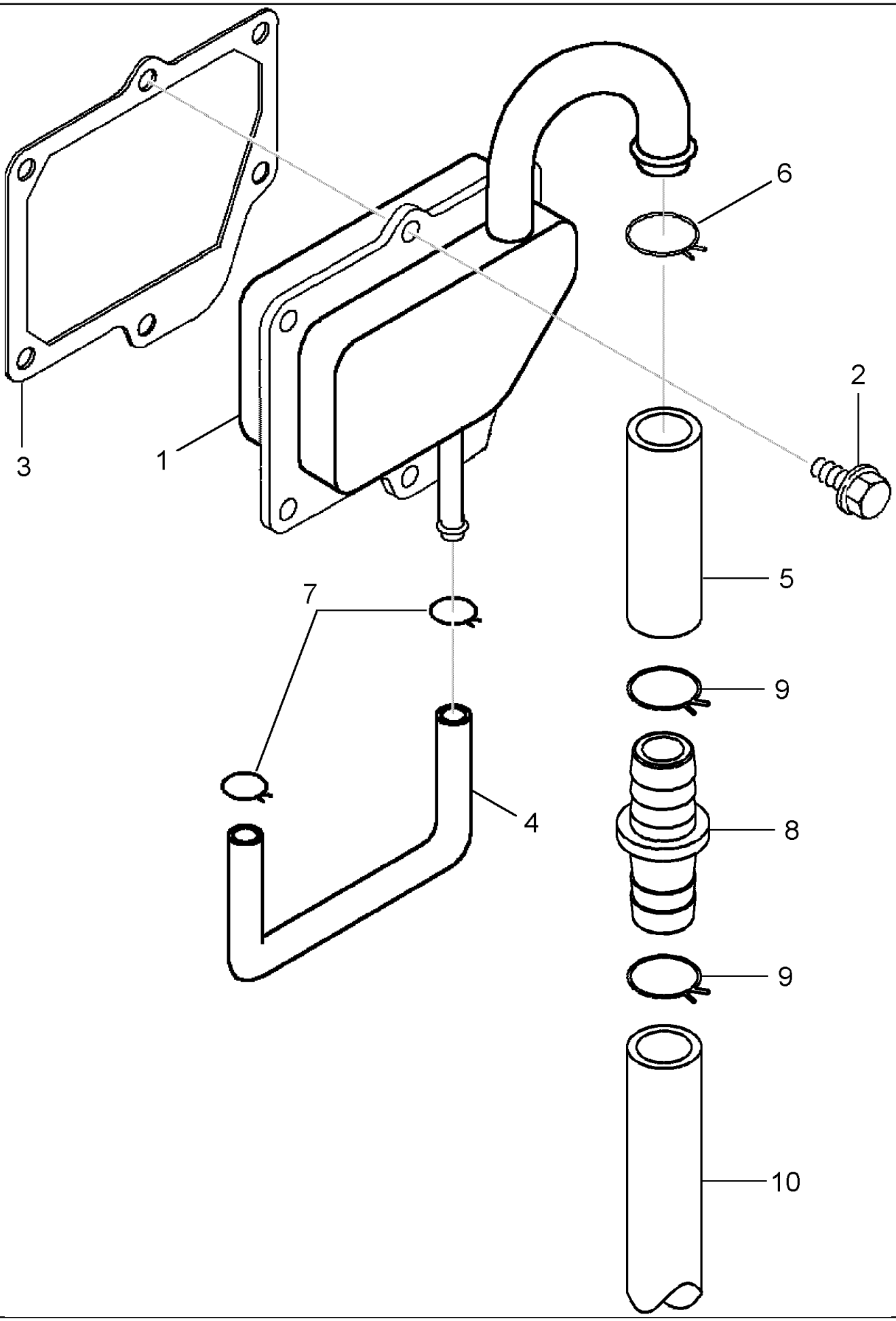
3
1
6
2
5
7
9
4
8
9
10

MX285 CASE IH MAGNUM TRACTOR (NORTH AMERICA)

02-33 CRANKCASE, BREATHER, MX255 AND MX285

ссылка	Номер детали	Кол-во	Описание
1	J937652	1	BREATHER, , Order 87437062. Also Order 87436828, 87437060, 214-1314, 87437056 and 86625099 for Initial Replacement, BSN 46325445
1	87437062	1	BREATHER, , ASN 46325445
2	845-6015	6	BOLT, Hex Flg, M6 x 15, 8.8, Full Thd, M6 x 15; 8.8, BSN 46325445
2	87409160	6	SCREW, M6 x 16; 10.9, ASN 46325445
3	J944683	1	GASKET, , BSN 46325445
3	87436828	1	GASKET, , ASN 46325445
4	J948068	1	HOSE, , BSN 46325445
4A	87437060	1	HOSE, , ASN 46325445
5	J944714	1	HOSE, 320 mm (12-5/8 in)
6	214-1318	1	CLAMP, HOSE, #18, 1 1/8", Spring, 1-1/8, BSN 46325445
6	214-1315	1	CLAMP, HOSE, #15, 15/16", Spring, 15/16, ASN 46325445
7	214-1310	2	CLAMP, HOSE, #10, 5/8", Spring, 5/8, BSN 46325445
7A	214-1314	1	CLAMP, HOSE, #14, 7/8", Spring, 7/8, ASN 46325445
8	1301342C1	1	FITTING,
9	214-1315	2	CLAMP, HOSE, #15, 15/16", Spring, 15/16
10	414360A1	1	HOSE ASSY., 750 mm (29-1/2 in)

02-35 CAMSHAFT, MX255 AND MX285

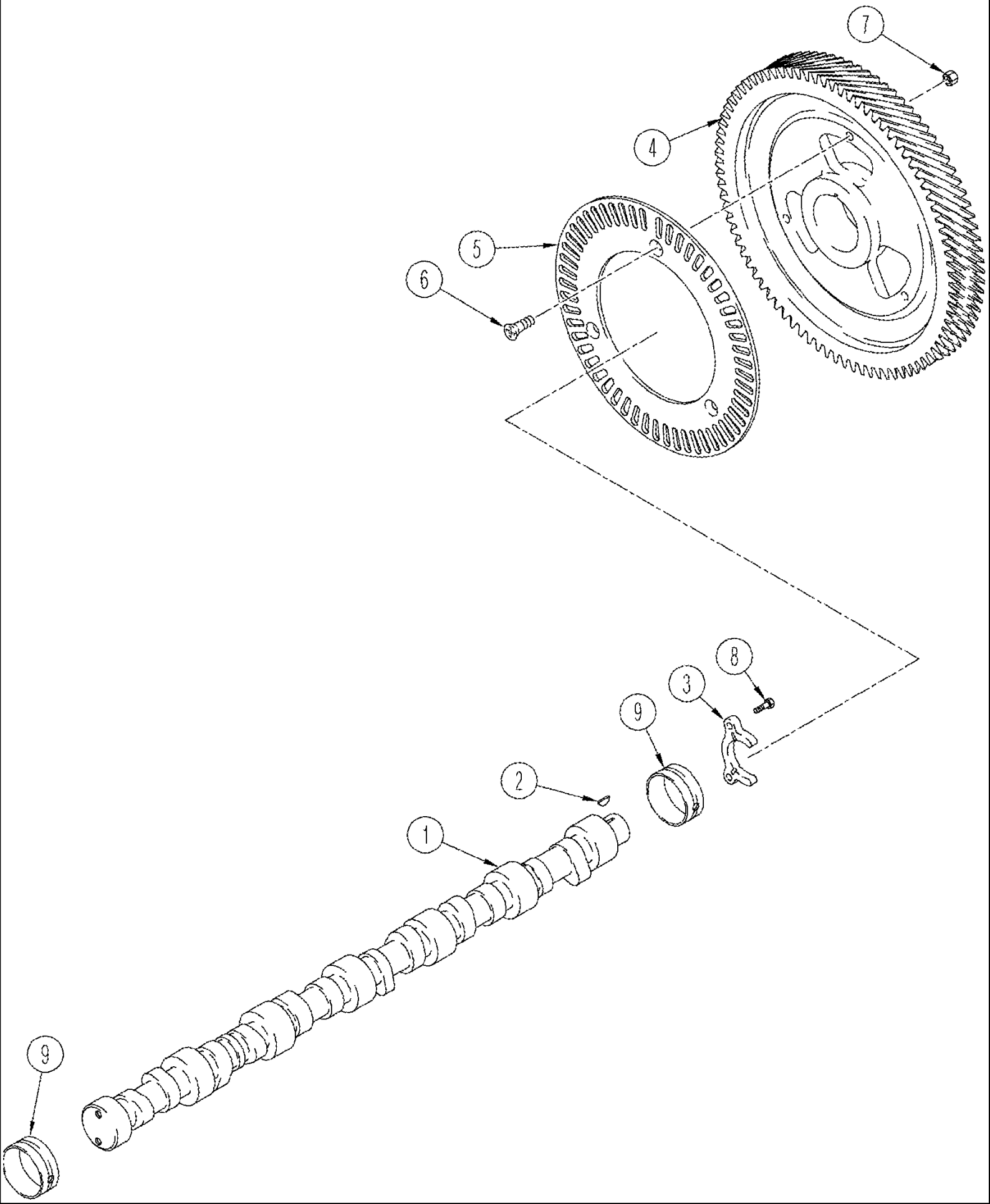

MX285 CASE IH MAGNUM TRACTOR (NORTH AMERICA)

02-35 CAMSHAFT, MX255 AND MX285

ссылка	Номер детали	Кол-во	Описание
1	J938163	1	CAMSHAFT,
2	836-4065	1	WOODRUFF KEY, M4 x 6.5 x 15.72, 4 x 6,5 mm
3	J944001	1	SUPPORT,
4	J944298	1	GEAR, Inc. 4, 5, 6, 7
5	NSS	1	NOT SERVICED SEPARATELY, Ring
6	NSS	3	NOT SERVICED SEPARATELY, Screw
7	NSS	3	NOT SERVICED SEPARATELY, Nut
8	J900227	2	BOLT, Hex, M8 x 1.25 x 22, M8 x 22
9	J945329	7	BUSHING,

MX285 CASE IH MAGNUM TRACTOR (NORTH AMERICA)

02-37 CYLINDER BLOCK, MX255 AND MX285

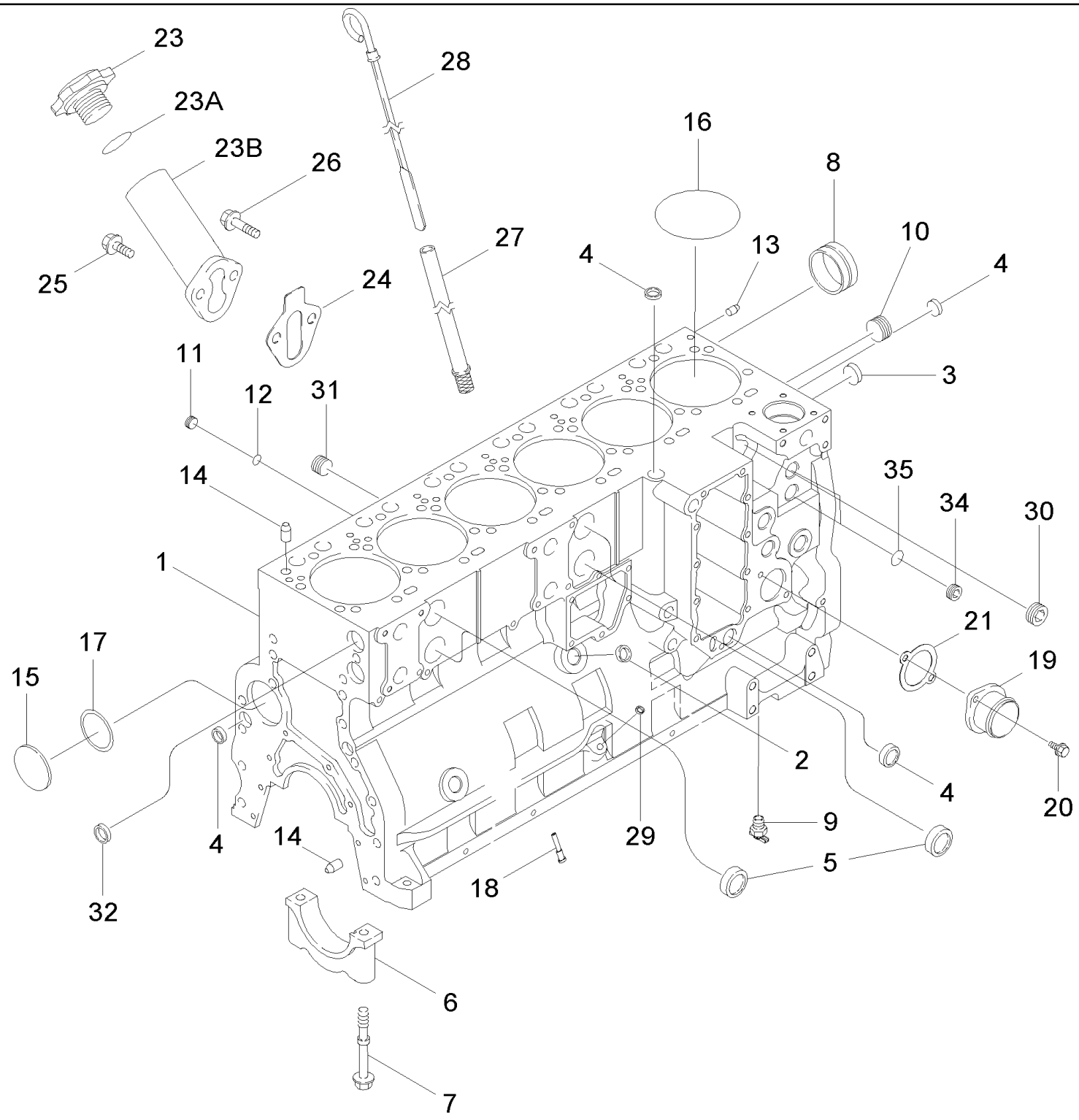

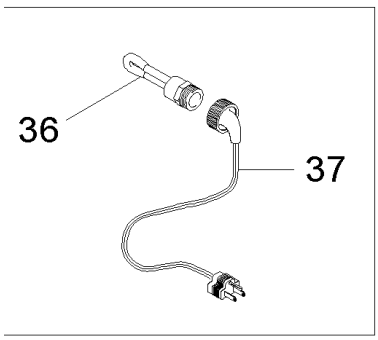

Note: Basic engines and reman engines are generic engines. The engines are complete internally; however, externally all parts are not supplied with the engines. Check the configuration of the engine being removed, with the configuration of the engine being installed. For any external components not supplied with the engine being installed, reuse those parts from the engine that has just been removed. Do not return the old engine, until the unit is reassembled.

MX285 CASE IH MAGNUM TRACTOR (NORTH AMERICA)

02-37 CYLINDER BLOCK, MX255 AND MX285

ссылка	Номер детали	Кол-во	Описание
	389379A2	1	ENGINE ASSY, Complete Engine, Order 87410984, Complete Engine, Less, Starter, Alternator, Fan, Fan Belt, Air Cleaner, Muffler and Exhaust Pipe., MX255
	NS	1	NOT SERVICED, Complete Engine, Order 87400262, Complete Engine, Less, Starter, Alternator, Fan, Fan Belt, Air Cleaner, Muffler and Exhaust Pipe., MX285
	87410984	1	ENGINE, BASIC, Basic Service Engine; See Note, MX255
	87400262	1	ENGINE, BASIC, Basic Service Engine; Less Starter, Alternator, Fan, Fan Belt, Air Cleaner, Muffler, Exhaust Manifold, Flywheel and Housing, Oil Fill and Dipstick, Fuel Inj. Pump, Injectors and Lines, Front Pulley, Belt Tensioner, Turbocharger and Aftercooler; See Note, MX285
	87410985	1	ENGINE, BASIC, Remanufactured, N.A. Only; See Note, MX255
	87400263	1	ENGINE, BASIC, Remanufactured, N.A. Only, MX285
	6830LBC	1	CORE-ENGINE,
	JR991309	1	ENGINE, SHORT, Short, Remanufactured, N.A. Only, MX255
	JR991308	1	ENGINE, EXCHANGE, Short, Remanufactured, N.A. Only, MX285
	6830SHBC	1	CORE-ENGINE,
	J991309	1	ENGINE, SHORT, Inc. Of 1 - 8, Stripped Short Block, Pistons, Connecting Rods and Bearings, Crankshaft and Bearings, MX255
	J991308	1	ENGINE, SHORT, Inc. Of 1 - 8, Stripped Short Block, Pistons, Connecting Rods and Bearings, Crankshaft and Bearings, MX285
1	J939299	1	BASIC BLOCK, Stripped, Also Order J800332 and J945967, Inc. 3 - 8
2	J920706	1	PLUG, 22 mm
3	A77586	2	PLUG, 43 mm
4	A77506	4	PLUG, 21 mm
5	J905401	4	PLUG, 35 mm
6	J936058	7	CAP,
7	J916369	14	SCREW, Hex Flg Hd, M14 x 128, M14 x 128
8	J945329	7	BUSHING, , See Figure 02-35
	J800332	1	KIT, Inc. 9 - 18
9	217-103	1	COCK, DRAIN, 1/4 PT
10	86625135	1	PLUG, Hex Soc, 1"-11 1/2 NPTF, 1 PT
11	J678923	6	PLUG, 10 mm, Includes 637-72081
12	637-72081	1	O-RING, Cl 7, 8.1MM ID x 1.6 Thk, 8,1 ID x 1,6 mm
13	J900257	2	PIN, 16 mm
14	J901846	4	PIN,
15	41-3044	1	PLUG, Exp, 2 3/4", 70 mm
16	J907177	6	O-RING,
17	J926048	1	O-RING, 66 mm ID
18	J928031	12	NOZZLE,
19	J944720	1	CONNECTOR, HYD., , BSN JAZ130634
19	87415507	1	TUBE ASSY., (Not Shown), See Figure 02-03, ASN JAZ130634
20	845-8020	2	BOLT, Hex Flg, M8 x 20, 8.8, Full Thd, M8 x 20; 8.8
21	J945603	1	GASKET,
23	J937759	1	CAP, FILLER,
23A	238-5123	1	O-RING, -123, 70 Duro, 1.174" ID x .103" Thk, 1-3/16 ID x 3/32
23B	J944510	1	PIPE ASSY.,
24	J939258	1	GASKET,

Note: Basic engines and reman engines are generic engines. The engines are complete internally; however, externally all parts are not supplied with the engines. Check the configuration of the engine being removed, with the configuration of the engine being installed. For any external components not supplied with the engine being installed, reuse those parts from the engine that has just been removed. Do not return the old engine, until the unit is reassembled.

ссылка	Номер детали	Кол-во	Описание
25	845-8020	1	BOLT, Hex Flg, M8 x 20, 8.8, Full Thd, M8 x 20; 8.8
26	845-8070	1	BOLT, Hex Flg, M8 x 70, 8.8, M8 x 70
27	A77645	1	TUBE,
28	J934481	1	DIPSTICK,
29	J943808	1	PLUG, 13 mm
30	263136	2	PLUG, Hex Soc, 3/4"-14 NPTF, 3/4 PT
31	217-438	2	PLUG, Hex Soc, 1/2"-14, 1/2 PT
32	J920443	2	PLUG, 30 mm
34	313244A1	2	PLUG, 22 mm, Inc. 35
35	313246A1	1	O-RING, 19 ID x 2,2 mm
36	310493A1	1	KIT, Engine Block Heater, 120V/1000W, Inc. 37
37	196466A1	1	CABLE, ELECTRIC, 1829 mm (72 in)
36	310494A1	1	KIT, Engine Block Heater, 240V/1000W, Inc. 37
37	J913112	1	HARNESS, WIRE, 305 mm (12 in)
	A78020	1	PACKAGE, REPAIR, Engine Block, Not Illustrated, See Figure 02-39

Note: Basic engines and reman engines are generic engines. The engines are complete internally; however, externally all parts are not supplied with the engines. Check the configuration of the engine being removed, with the configuration of the engine being installed. For any external components not supplied with the engine being installed, reuse those parts from the engine that has just been removed. Do not return the old engine, until the unit is reassembled.

02-39 KIT ENGINE OVERHAUL, MX255 AND MX285

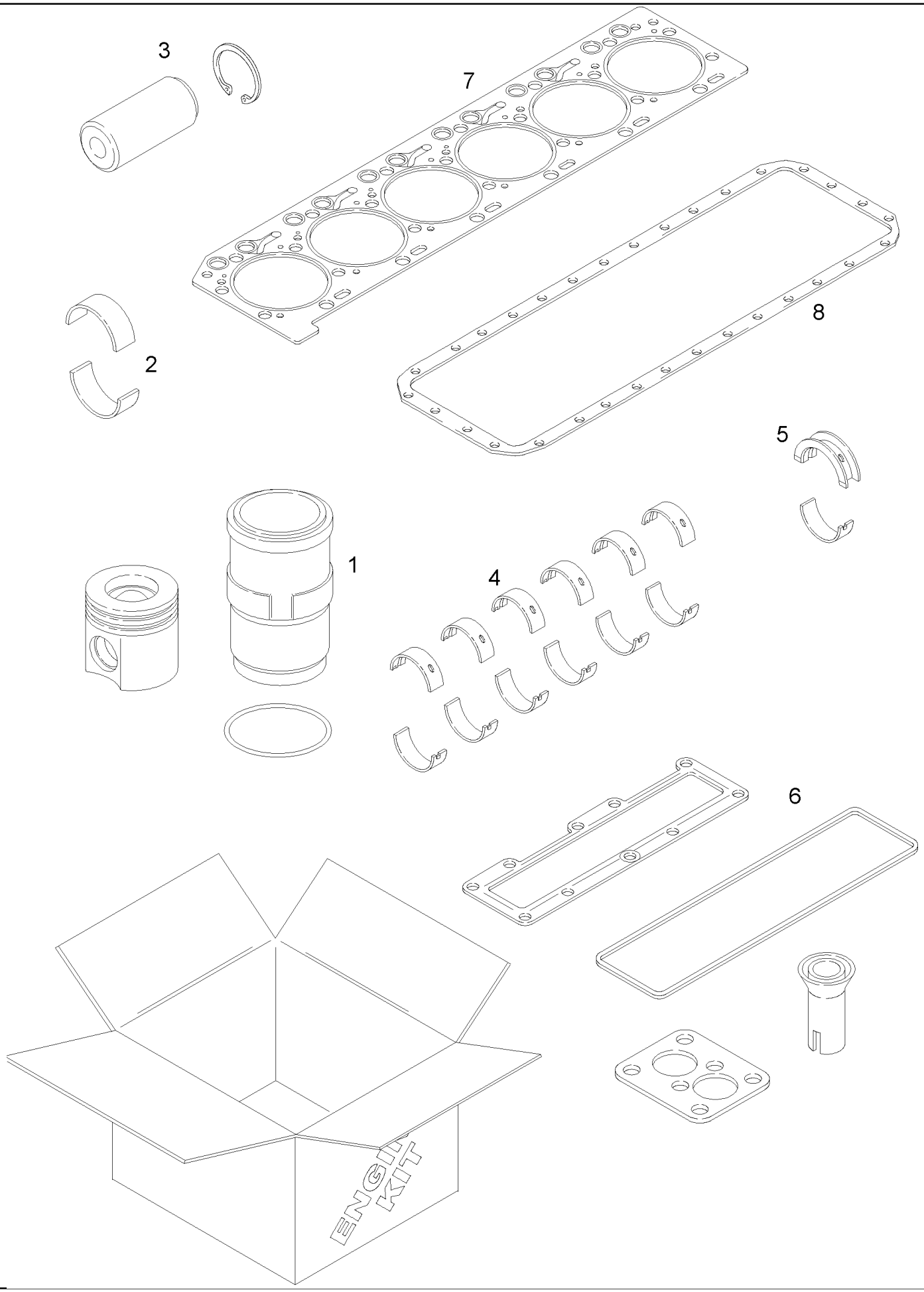

MX285 CASE IH MAGNUM TRACTOR (NORTH AMERICA)

02-39 KIT ENGINE OVERHAUL, MX255 AND MX285

ссылка	Номер детали	Кол-во	Описание
	A78019	1	KIT, Engine Overhaul Kit, Inc. 1 - 8, MX255
	A78020	1	PACKAGE, REPAIR, Engine Overhaul Kit, Inc. 1 - 8, MX285
1	A77901	6	KIT, PISTON & RINGS, Piston & Rings, MX255, See Figure 02-43
1	A77970	6	KIT, PISTON & RINGS, , MX285, See Figure 02-43
2	A77563	6	BEARING LINER, Connecting Rod, Standard, See Figure 02-43
3	J934046	6	PIN, Piston, See Figure 02-43
4	J945930	6	BEARING, CRANKSHAFT, Standard, See Figure 02-40
5	J945929	1	BEARING, CRANKSHAFT, Thrust, Standard, See Figure 02-40
6	A78018	1	KIT, GASKET, Valve Grind, See Figure 02-45
7	J943366	1	GASKET, CYLINDER HEAD, , See Figure 02-28
8	A77999	1	KIT, GASKET, Oil Pan, See Figure 02-25

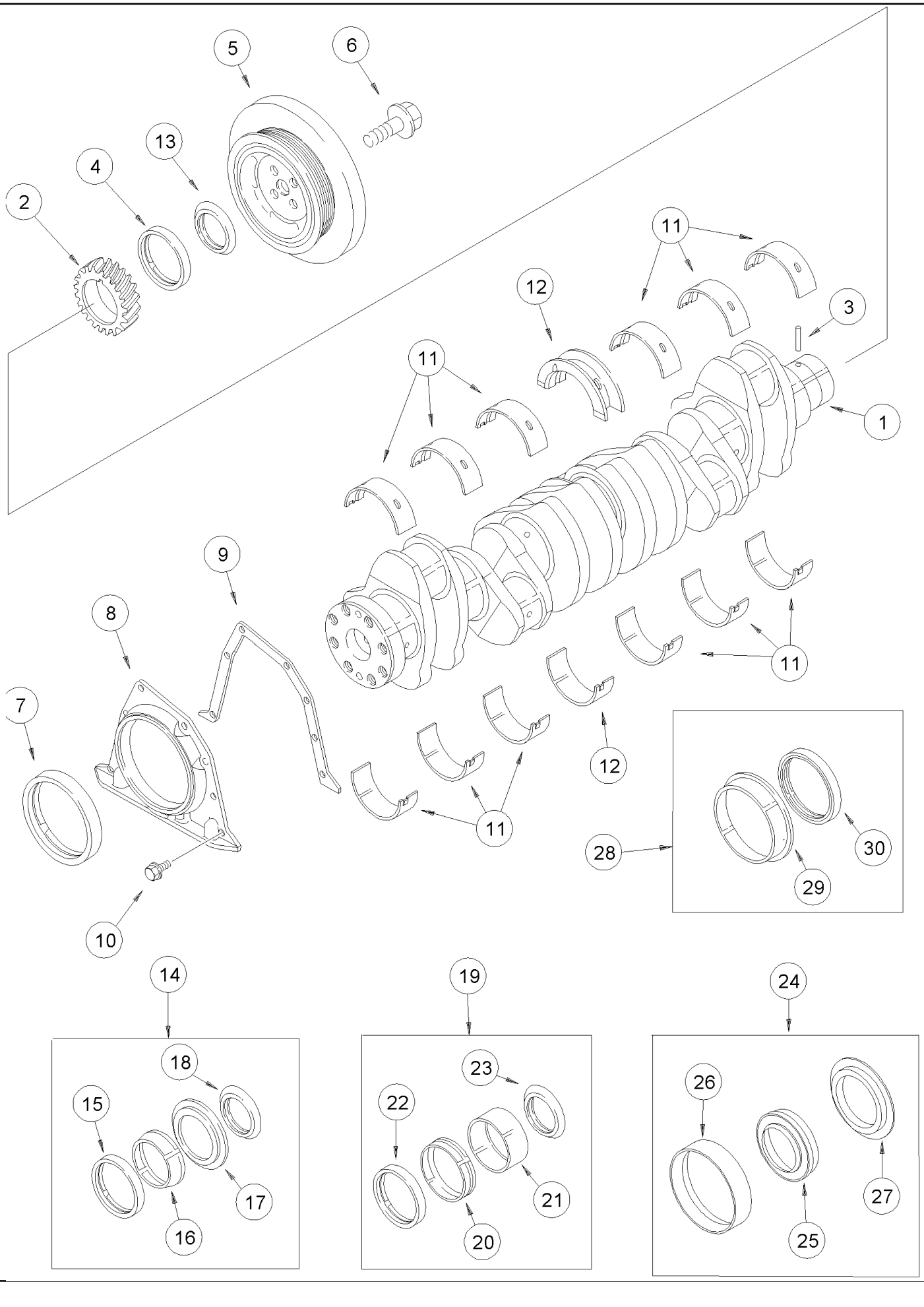
5
6
13
4
2
11
12
3
11
1
11
9
8
7
12
11
28
30
29
10
14
19
24
18
15
17
16
23
22
21
20
26
27
25

MX285 CASE IH MAGNUM TRACTOR (NORTH AMERICA)

02-40 CRANKSHAFT

сылка	Номер детали	Кол-во	Описание
1	J918986	1	CRANKSHAFT, New, Inc. 2, 3
1	JR918986	1	REMAN-CRANKSHAFT, Remanufactured, N.A. Only, Inc. 2, 3
1	JC918986	1	CORE-CRANKSHAFT,
2	J918776	1	GEAR,
3	J904483	1	PIN,
4	NSS	1	NOT SERVICED SEPARATELY, Seal, Order A77790
5	J925570	1	DAMPER,
6	J906733	4	BOLT, M14 x 35
7	NSS	1	NOT SERVICED SEPARATELY, Seal, Order J934486
8	J933384	1	COVER, REAR,
9	J914301	1	GASKET,
10	845-6015	8	BOLT, Hex Flg, M6 x 15, 8.8, Full Thd, M6 x 15; 8.8
11	J945930	6	BEARING, CRANKSHAFT, Standard
11	J945931	6	BEARING, CRANKSHAFT, Undersize 0,25 mm
11	J945932	6	BEARING, CRANKSHAFT, Undersize 0,50 mm
11	J945933	6	BEARING, CRANKSHAFT, Undersize 0,75 mm
11	J945934	6	BEARING, CRANKSHAFT, Undersize 1,00 mm
12	J945929	1	BEARING, CRANKSHAFT, Standard
12	J945922	1	BEARING, CRANKSHAFT, Undersize 0,25 mm
12	J945923	1	BEARING, CRANKSHAFT, Undersize 0,50 mm
12	J945924	1	BEARING, CRANKSHAFT, Undersize 0,75 mm
12	J945925	1	BEARING, CRANKSHAFT, Undersize 1,00 mm
12	J945926	1	BEARING, CRANKSHAFT, Standard, Oversize 0,25 mm
12	J945927	1	BEARING, CRANKSHAFT, Standard, Oversize 0,50 mm
12	J945928	1	BEARING, CRANKSHAFT, Undersize 0,50 mm, Oversize 0,50 mm
13	J918113	1	SHIELD, Order A77790
14	A77790	1	KIT, SEALS, Crankshaft, Front, Standard, Inc. 15 - 18
15	NSS	1	NOT SERVICED SEPARATELY, Seal
16	NSS	1	NOT SERVICED SEPARATELY, Tool
17	NSS	1	NOT SERVICED SEPARATELY, Tool
18	J918113	1	SHIELD,
19	A77808	1	KIT, SERVICE, Crankshaft, Front, Inc. 20 - 23
20	NSS	1	NOT SERVICED SEPARATELY, Sleeve
21	NSS	1	NOT SERVICED SEPARATELY, Tool
22	NSS	1	NOT SERVICED SEPARATELY, Seal
23	J924987	1	SHIELD,
24	J934486	1	KIT, SERVICE, Crankshaft Oil Seal, Rear, Standard, Inc. 25 - 27
25	NSS	1	NOT SERVICED SEPARATELY, Seal
26	NSS	1	NOT SERVICED SEPARATELY, Tool
27	NSS	1	NOT SERVICED SEPARATELY, Tool
28	A77810	1	KIT, SERVICE, Crankshaft, Rear Oil Seal, Oversize, Inc. 29, 30
29	NSS	1	NOT SERVICED SEPARATELY, Sleeve
30	NSS	1	NOT SERVICED SEPARATELY, Seal

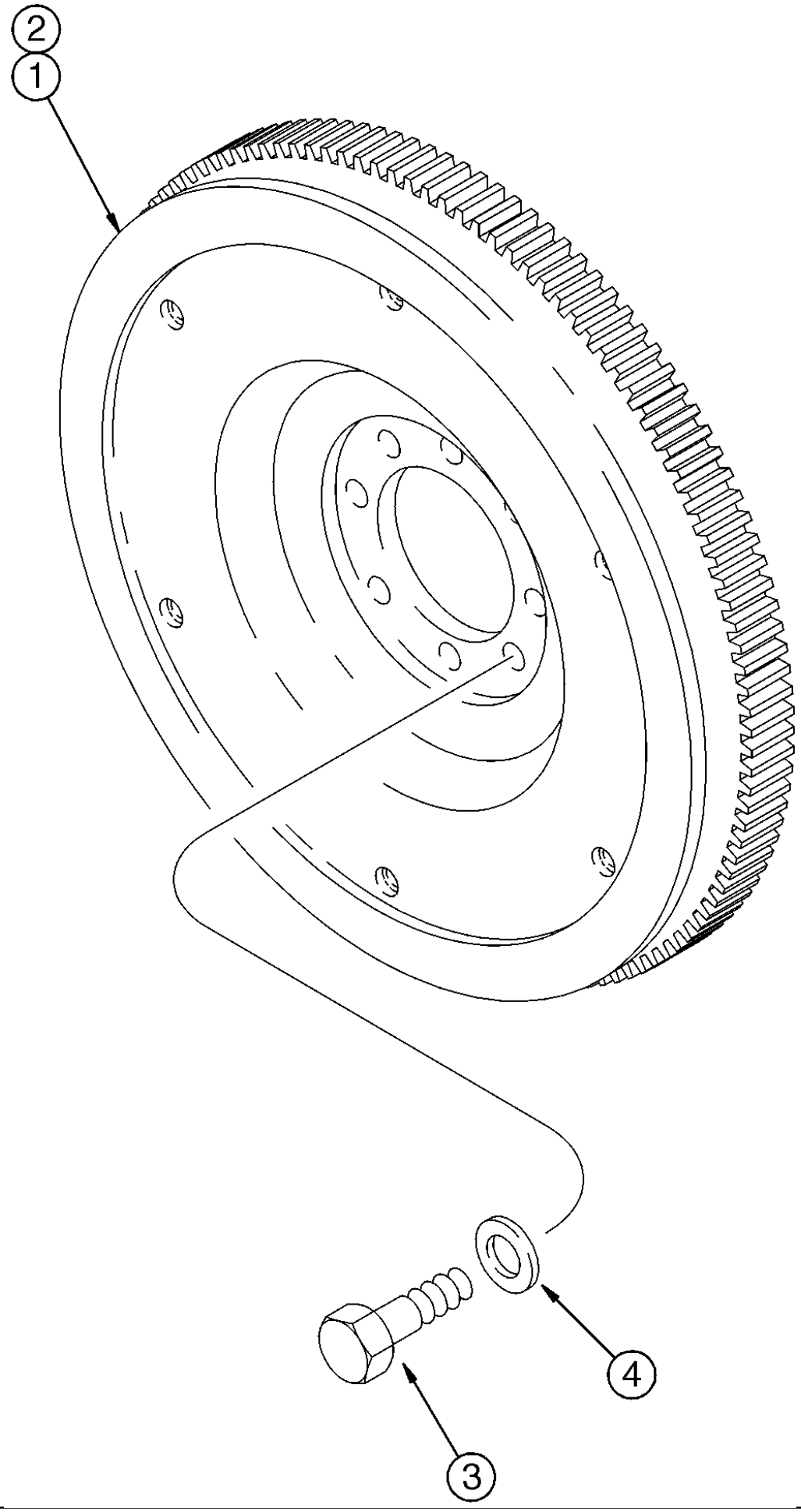
2
1
4
3

MX285 CASE IH MAGNUM TRACTOR (NORTH AMERICA)

02-41 FLYWHEEL

ссылка	Номер детали	Кол-во	Описание
1	J934838	1	FLYWHEEL, Inc. 2
2	J905031	1	GEAR,
3	J901395	8	SCREW, Hex, M12 x 1.25 x 32, Spc, M12 x 32
4	J900269	8	WASHER,

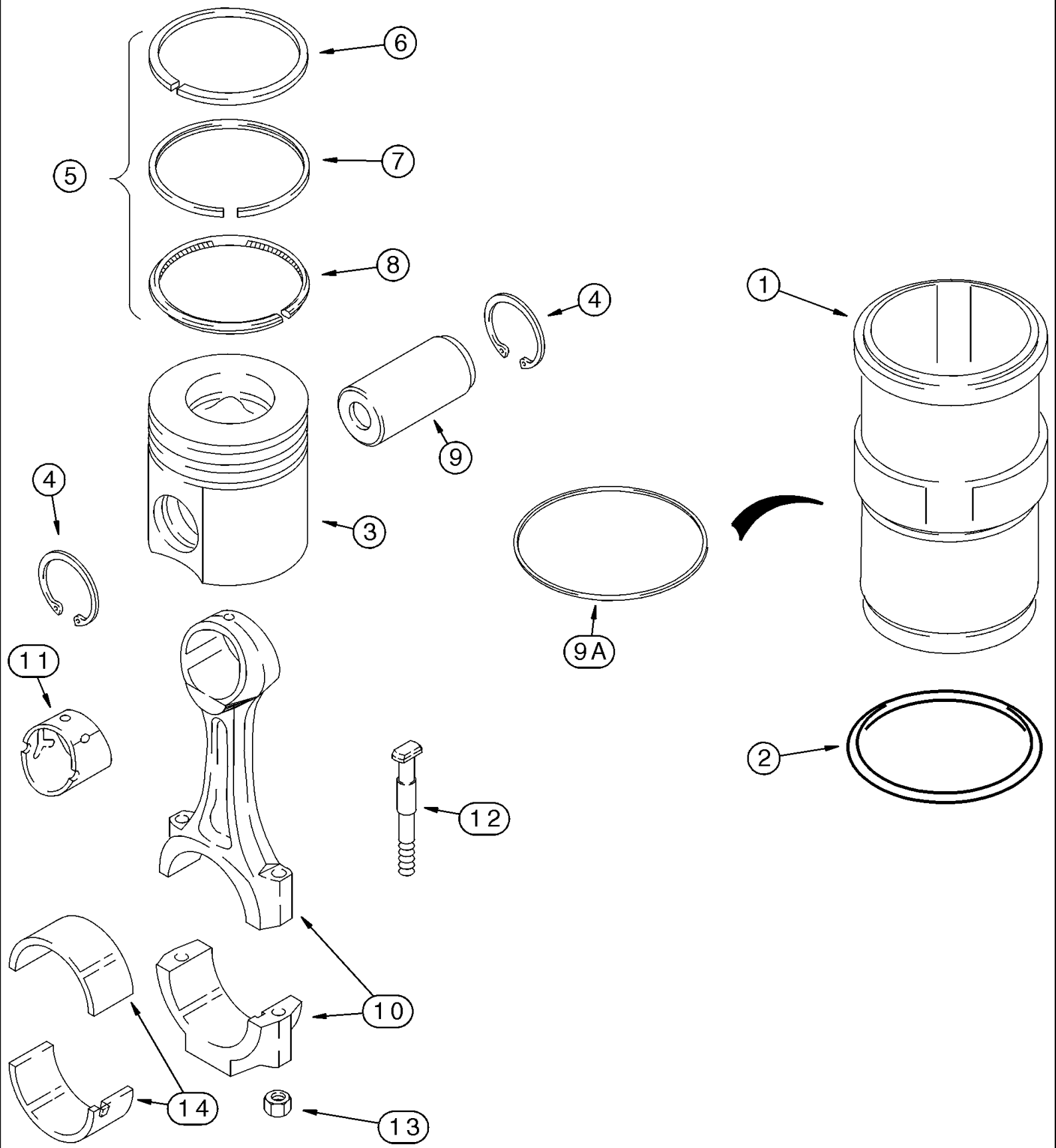
6
5
7
8
4
1
9
4
3
9A
11
2
12
10
14
13

MX285 CASE IH MAGNUM TRACTOR (NORTH AMERICA)

02-43 PISTONS - CONNECTING RODS, MX255 AND MX285

ссылка	Номер детали	Кол-во	Описание
	A77901	6	KIT, PISTON & RINGS, Piston & Rings, Standard, Inc. 1 - 8, MX255
	A77970	6	KIT, PISTON & RINGS, Standard, Inc. 1 - 8, MX285
1	J948095	1	SLEEVE CYLINDER,
2	J907177	1	O-RING,
	J800316	1	KIT, PISTON & RINGS, Standard, Inc. 3 - 8, MX255
	J800320	1	KIT, PISTON & RINGS, Standard, Inc. 3 - 8, MX285
3	NSS	1	NOT SERVICED SEPARATELY, Piston
4	100-21175	2	RING, SNAP, 1.75", Int, #175,
5	J802429	1	KIT, PISTON RINGS, Standard, Inc. 6 - 8, MX255
5	J802538	1	KIT, PISTON RINGS, Standard, Inc. 6 - 8, MX285
6	NSS	1	NOT SERVICED SEPARATELY, Ring, Top
7	NSS	1	NOT SERVICED SEPARATELY, Ring, Middle
8	NSS	1	NOT SERVICED SEPARATELY, Ring, Bottom
9	J934046	6	PIN,
9A	J924445	X	SHIM, 0,254 mm (0,010 in)
9A	J924446	X	SHIM, 0,381 mm (0,015 in)
9A	J924447	X	SHIM, 0,508 mm (0,020 in)
9A	J924448	X	SHIM, 0,762 mm (0,030 in)
9A	J924449	X	SHIM, 1,016 mm (0,040 in)
	J901383	6	ROD, CONNECTING, New, Inc. 10 - 13
	JR901383	1	REMAN-ROD CONNECTING, Remanufactured, N.A. Only, Inc. 10 - 13
	JC901383	1	CORE-ROD CONNECTING,
10	NSS	1	NOT SERVICED SEPARATELY, Rod
11	J913990	1	BEARING,
12	J928870	2	BOLT,
13	J934864	2	NUT,
14	A77563	6	BEARING LINER, Standard
14	A77564	6	BEARING LINER, Undersize 0,25 mm
14	A77565	6	BEARING LINER, Undersize 0,50 mm
14	A77566	6	BEARING LINER, Undersize 0,75 mm
14	A77567	6	BEARING LINER, Undersize 1,00 mm

MX285 CASE IH MAGNUM TRACTOR (NORTH AMERICA)

02-45 GASKET KIT - VALVE GRIND, MX255 AND MX285

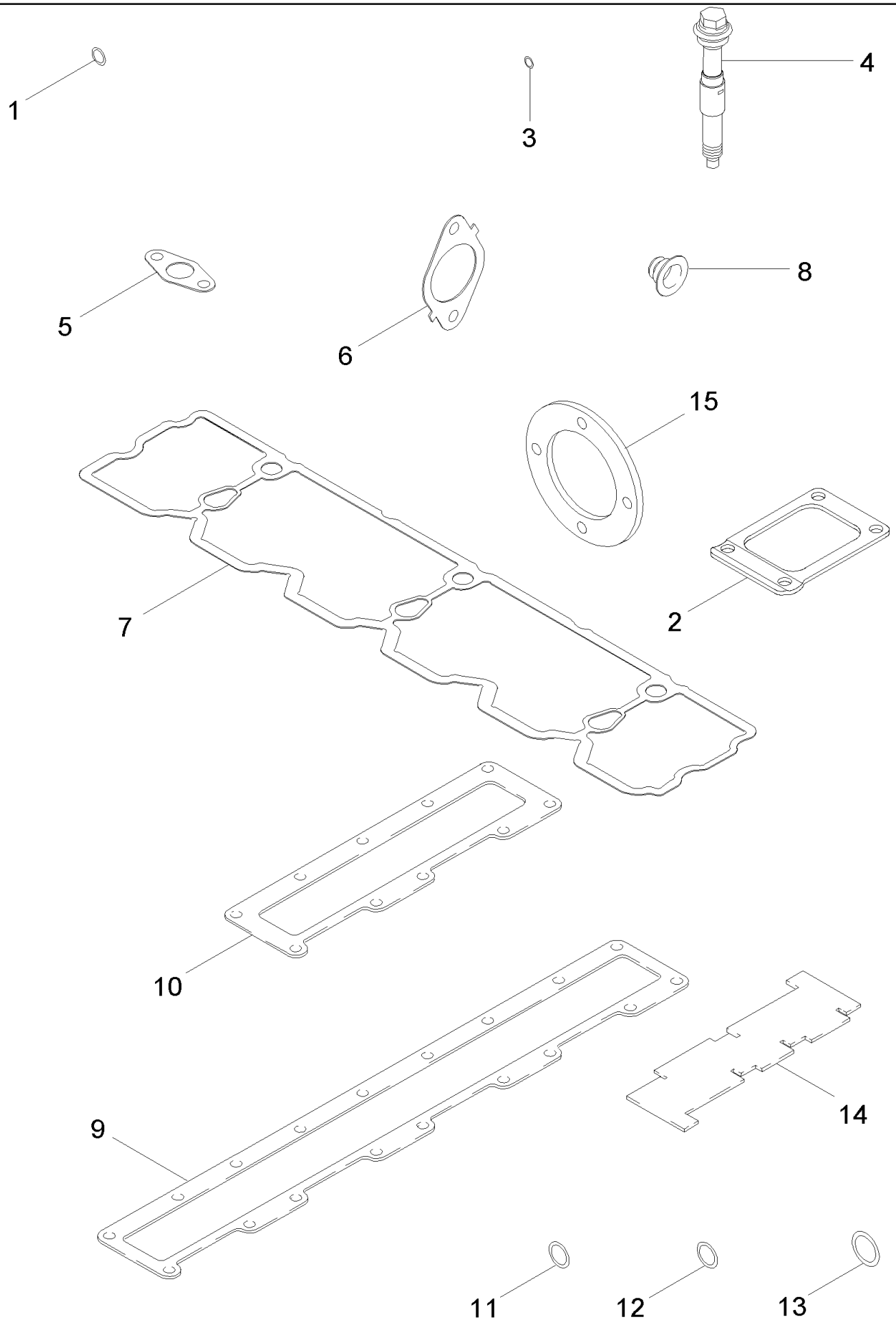

MX285 CASE IH MAGNUM TRACTOR (NORTH AMERICA)

02-45 GASKET KIT - VALVE GRIND, MX255 AND MX285

ссылка	Номер детали	Кол-во	Описание
	A78018	1	KIT, GASKET, Inc. 1 - 14
1	J867043	6	SEAL, Injector, See Figure 03-06
2	J919369	1	GASKET, Mounting, Turbocharger, See Figure 02-13
3	J937142	6	SEAL, 7 mm, Nozzle, See Figure 03-13
4	J990876	5	ISOLATOR, Valve Cover Screws
5	J937706	1	GASKET, Oil Drain, See Figure 02-13
6	J937479	6	GASKET, MANIFOLD, Exhaust, See Figure 02-12
7	J939284	1	GASKET, Valve Cover, See Figure 02-18
8	J943888	24	SEAL, Intake Valve, See Figure 02-19
9	J944646	1	GASKET, MANIFOLD, Intake, See Figure 02-12
10	J944647	1	GASKET, Connector Mounting, See Figure 02-12
12	238-7210	6	O-RING, -210, Cl 7, .734" ID x .139" Thk, , See Figure 03-13
13	313262A1	2	SEAL, 9,2 mm ID x 1,7 mm
14	J823921	1	GAUGE, Length
15	J917892	1	GASKET,
11	237-6005	2	O-RING, 5-1, 90 Duro, .414" ID x .072" Thk,

MX285 CASE IH MAGNUM TRACTOR (NORTH AMERICA)

02-47 GASKET KIT - CYLINDER BLOCK, MX255 AND MX285

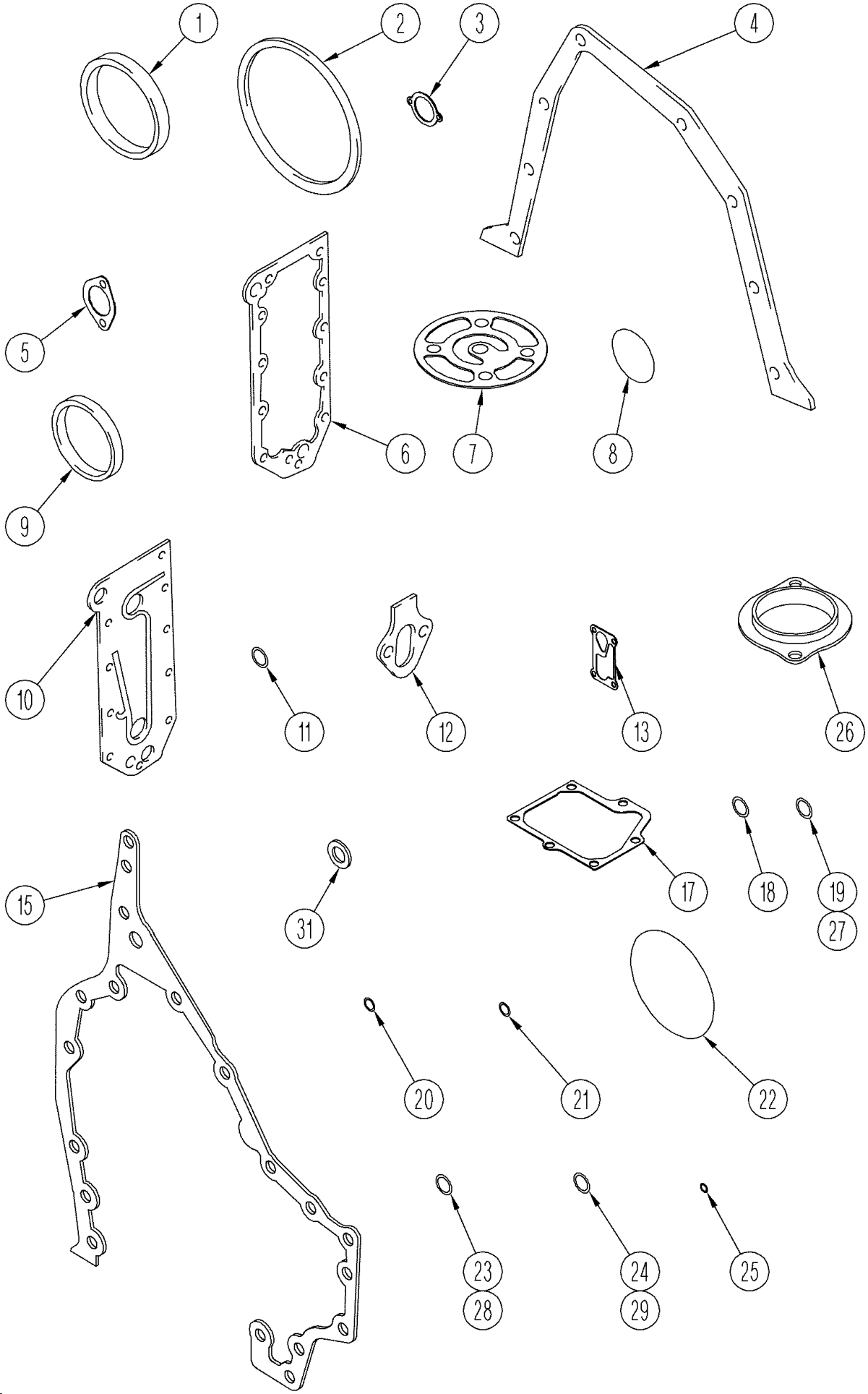

MX285 CASE IH MAGNUM TRACTOR (NORTH AMERICA)

02-47 GASKET KIT - CYLINDER BLOCK, MX255 AND MX285

ссылка	Номер детали	Кол-во	Описание
	A77981	1	KIT, GASKET, Inc. 1 - 31
1	J903475	1	SEAL, Front Cover, See Figure 02-11
2	J907177	6	O-RING, , See Figures 02-23, 02-26
3	J945603	1	GASKET, Water Inlet Mounting, See Figure 02-23
4	J914301	1	GASKET, Rear Cover, See Figure 02-24
5	J914302	1	GASKET, Suction Tube, See Figure 02-17
6	J918174	1	GASKET, Oil Cooler Mounting, See Figure 02-16
7	J921605	1	GASKET, Filter Head, See Figure 02-16
8	J926048	1	O-RING, 66 mm ID, See Figure 02-23
9	J926722	1	SEAL, , See Figure 03-12
10	J929011	1	GASKET, Oil Cooler, See Figure 02-16
11	J930911	1	O-RING, 3/4 ID x 1/16, See Figure 02-16
12	J939258	1	GASKET, Pump Mounting, See Figure 02-23
13	J937367	1	GASKET, , See Figure 02-20
15	J944293	1	GASKET, Gear Housing, See Figure 02-11
17	J944683	1	GASKET, Breather, See Figure 02-21
18	237-8008	2	O-RING, 8-1, Cl 8, .644" ID x .087" Thk, , See Figure 03-04
19	237-8010	2	O-RING, 10-1, Cl 8, .755" ID x .097" Thk, , See Figure 03-04
20	238-5013	1	O-RING, -013, 70 Duro, .426" ID x .070" Thk, , See Figure 02-20
21	238-5111	3	O-RING, -111, 70 Duro, .424" ID x .103" Thk, , See Figure 02-20
22	238-5244	1	O-RING, -244, 70 Duro, 4.234" ID x .139" Thk, , See Figure 02-10
23	A77724	1	O-RING, , See Figure 02-16
24	313246A1	2	O-RING, 19 ID x 2,2 mm, See Figure 02-23
25	637-62081	9	O-RING, Cl 6, 8.1MM ID x 1.6 Thk, 8,1 ID x 1,6 mm, See Figure 03-04
26	J945603	1	GASKET, Water Inlet, See Figure 02-20
27	237-8012	1	O-RING, 12-1, Cl 8, .924" ID x .116" Thk, 3/4 OD Tube
28	J678912	2	O-RING, 11,3 ID x 2,2 mm
29	J330202	2	O-RING, 11,3 ID x 2,2 mm
30	J935171	4	WASHER, SEALING, 12 x 19 x 1,5 mm

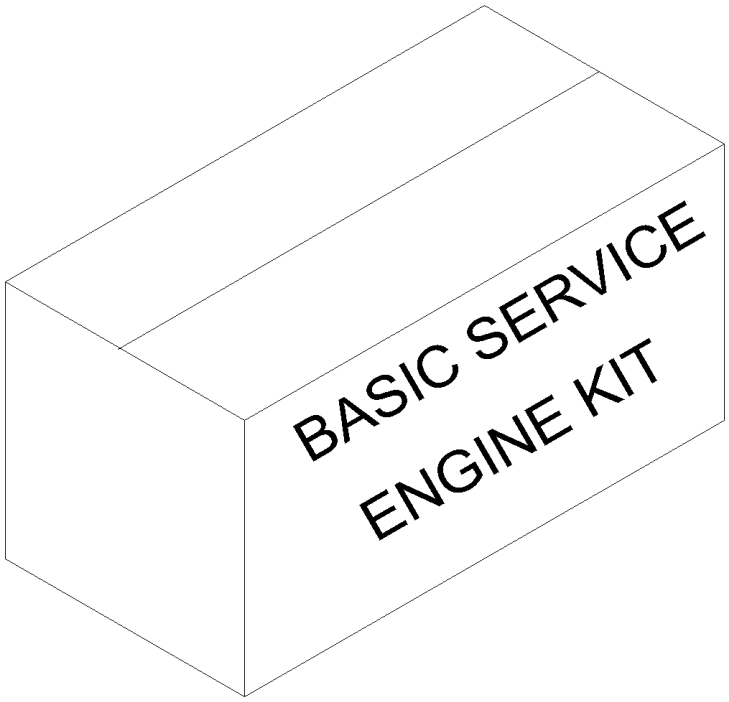
BASIC SERVICE
ENGINE KIT

MX285 CASE IH MAGNUM TRACTOR (NORTH AMERICA)

02-49 GASKET KIT - BASIC SERVICE ENGINE, MX255 AND MX285

ссылка	Номер детали	Кол-во	Описание
	A78003	1	KIT, GASKET, Inc. 1 - 24
1	222-993	2	GASKET, 3/8 Tube, Fl, Copper, 3/8 OD
2	238-5013	2	O-RING, -013, 70 Duro, .426" ID x .070" Thk,
3	238-7018	1	O-RING, -018, Cl 7, .739" ID x .070" Thk,
4	238-7210	6	O-RING, -210, Cl 7, .734" ID x .139" Thk,
5	313262A1	2	SEAL, 9,2 mm ID x 1,7 mm
6	J937706	1	GASKET, Oil Drain
7	J330081	1	O-RING,
8	J330202	2	O-RING, 11,3 ID x 2,2 mm
9	J330478	2	O-RING,
10	J678603	2	O-RING, 9,3 mm ID x 2,2 mm
11	J678912	2	O-RING, 11,3 ID x 2,2 mm
12	J867043	6	SEAL,
13	J883284	1	SEAL,
14	J937142	6	SEAL, 7 mm
15	J911941	1	GASKET, Turbocharger Mounting
16	J912473	1	O-RING,
17	J917892	1	GASKET,
18	J919369	1	GASKET,
19	J939258	1	GASKET,
20	J935171	4	WASHER, SEALING, 12 x 19 x 1,5 mm
21	J937479	6	GASKET, MANIFOLD, Exhaust Manifold
22	J944646	1	GASKET, MANIFOLD,
23	J944647	1	GASKET,
24	J944683	1	GASKET, Breather

MX285 CASE IH MAGNUM TRACTOR (NORTH AMERICA)

03-02 FUEL INJECTION SYSTEM, MX255 AND MX285

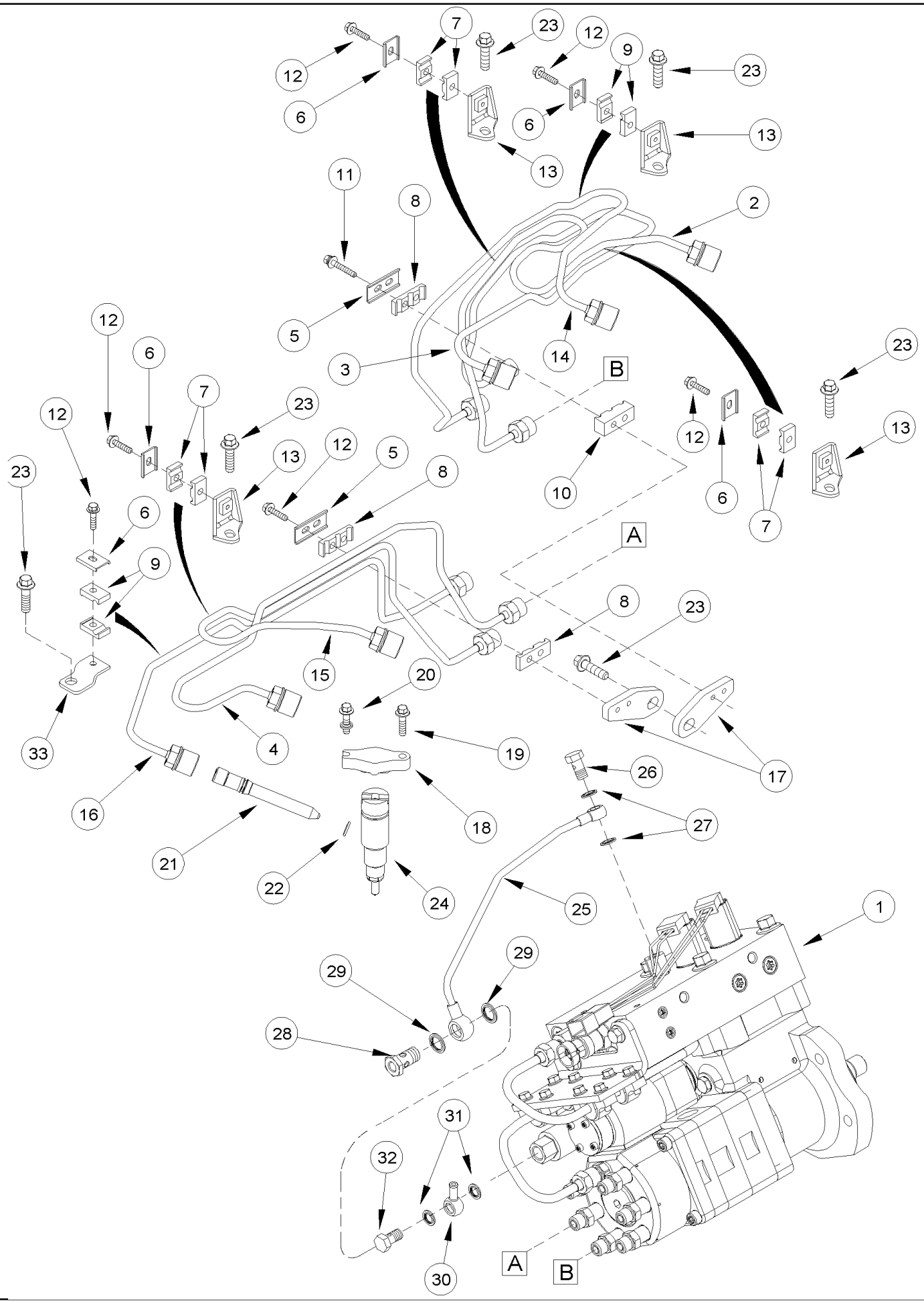

MX285 CASE IH MAGNUM TRACTOR (NORTH AMERICA)

03-02 FUEL INJECTION SYSTEM, MX255 AND MX285

ссылка	Номер детали	Кол-во	Описание
1	J4076442	1	PUMP, FUEL INJECTION, Inc. 25 - 29, See Figure 03-08
2	J944686	1	TUBE, No. 1
3	J944690	1	TUBE, No. 3
4	J944694	1	TUBE, No. 5
5	J904519	2	SUPPORT,
6	J904711	5	CLAMP,
7	J917746	6	CLAMP,
8	J917747	3	CLAMP,
9	J919359	4	CLAMP,
10	J944699	1	CLAMP,
11	J944717	1	SCREW,
12	J920854	7	SCREW, Hex Hd, M5 x .8 x 20, w/LW, M5 x 20
13	J930688	4	SUPPORT,
14	J944688	1	TUBE, No. 2
15	J944692	1	TUBE, No. 4
16	J944696	1	TUBE, No. 6
17	J944698	2	SUPPORT,
18	J940639	6	CLAMP,
19	844-6025	6	BOLT, Hex Flg, M6 x 25, 8.8,
20	J940817	6	SCREW,
21	J944833	6	CONNECTOR, HYD.,
22	J867043	6	SEAL,
23	844-8030	6	BOLT, Hex Flg, M8 x 30, 8.8, Full Thd, M8 x 30; 8.8
24	J948529	6	INJECTOR ASSY., , See Figure 03-15
25	J4010174	1	TUBE,
26	J918002	1	SCREW,
27	J935170	2	WASHER, SPECIAL,
28	J4002006	1	SCREW,
29	J918192	2	RING, PACKING,
30	J944869	1	CONNECTOR, HYD.,
31	J918192	2	RING, PACKING, 14 x 20 x 1 mm
32	J924725	1	BOLT, BANJO,
33	J943503	1	SUPPORT,

03-05 PUMP, FUEL TRANSFER, MX255 AND MX285

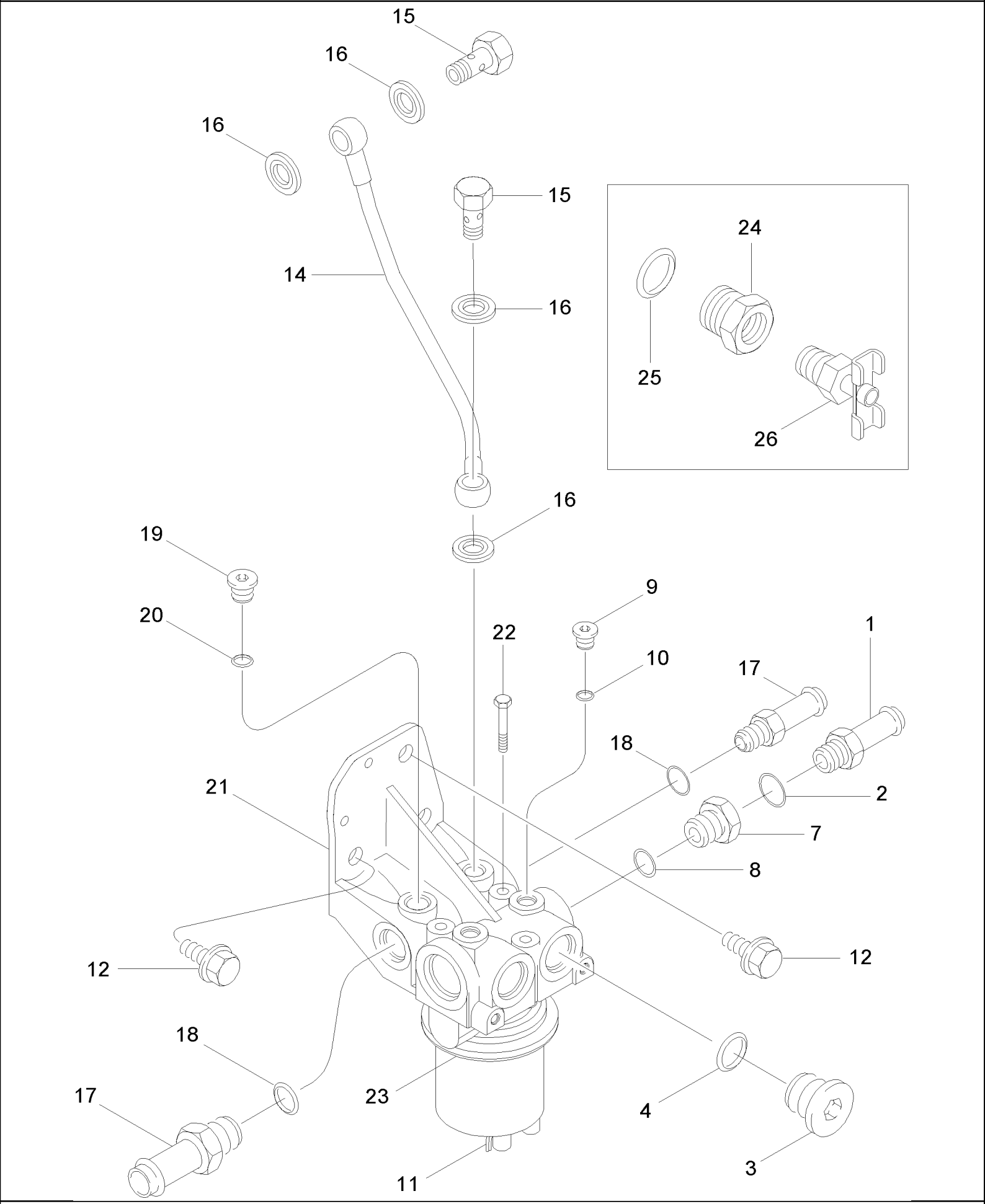

MX285 CASE IH MAGNUM TRACTOR (NORTH AMERICA)

03-05 PUMP, FUEL TRANSFER, MX255 AND MX285

ссылка	Номер детали	Кол-во	Описание
1	J931014	1	COUPLING, PUSH-PULL, Inc. 2
2	237-8008	1	O-RING, 8-1, Cl 8, .644" ID x .087" Thk,
3	311184A1	2	PLUG, 7/8-16, Inc. 4
4	237-8010	2	O-RING, 10-1, Cl 8, .755" ID x .097" Thk,
7	J944823	1	ADAPTER, Includes 8
8	237-8010	1	O-RING, 10-1, Cl 8, .755" ID x .097" Thk,
9	J678923	2	PLUG, 10 mm, Inc. 10
10	637-62081	1	O-RING, Cl 6, 8.1MM ID x 1.6 Thk, 8,1 ID x 1,6 mm
11	J949093	1	PUMP, FEED, Inc. 9, 10, 21 - 23
12	844-10025	3	BOLT, Hex Flg, M10 x 25, 8.8, Full Thd, M10 x 20; 8.8
14	J943599	1	TUBE,
15	J903035	2	BOLT, BANJO, M12 x 24
16	J935171	4	WASHER, SEALING, 12 x 19 x 1,5 mm
17	J944825	2	COUPLING, Inc. 18
18	237-8008	2	O-RING, 8-1, Cl 8, .644" ID x .087" Thk,
19	J678921	1	PLUG, 14 mm, Inc. 20
20	J678912	1	O-RING, 11,3 ID x 2,2 mm
21	NSS	1	NOT SERVICED SEPARATELY, Bracket
22	414-432	3	BOLT, Hex, 1/4"-28 x 2", G5, 1/4 x 2
23	J944382	1	GASKET, Mounting
24	87448793	1	ADAPTER, Inc. 25, With Fuel Separator Filter
25	237-8010	1	O-RING, 10-1, Cl 8, .755" ID x .097" Thk,
26	81465471	1	DRAINCOCK/TAP, SUPPLY, , With Fuel Separator Filter

MX285 CASE IH MAGNUM TRACTOR (NORTH AMERICA)

03-06 FUEL FILTER AND CONNECTIONS, MX255 AND MX285

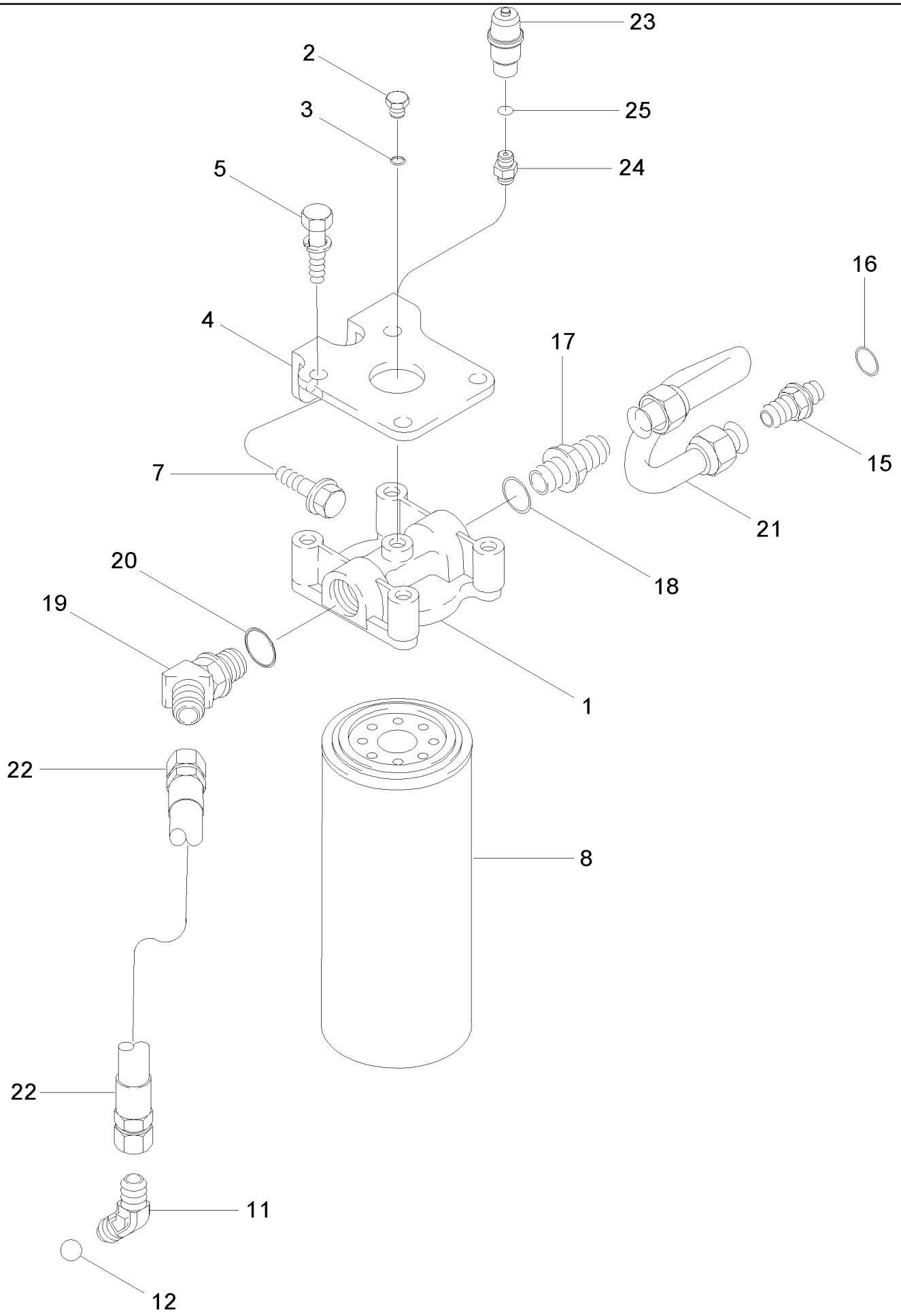

MX285 CASE IH MAGNUM TRACTOR (NORTH AMERICA)

03-06 FUEL FILTER AND CONNECTIONS, MX255 AND MX285

сылка	Номер детали	Кол-во	Описание
1	J944987	1	HEAD,
2	J678923	1	PLUG, 10 mm, Inc. 3
3	637-72081	1	O-RING, Cl 7, 8.1MM ID x 1.6 Thk, 8,1 ID x 1,6 mm
4	J944845	1	BRACKET,
5	A77546	4	BOLT, 3/8 NC x 1-1/4 in
7	844-10020	2	BOLT, Hex Flg, M10 x 20, 8.8,
8	J329289	1	FILTER, FUEL,
11	311171A1	1	ELBOW, 45 deg, Inc. 12
12	237-8008	1	O-RING, 8-1, Cl 8, .644" ID x .087" Thk,
15	311187A1	1	ADAPTER, Inc. 16
16	237-8012	1	O-RING, 12-1, Cl 8, .924" ID x .116" Thk, 3/4 OD Tube
17	J606653	1	ADAPTER, Inc. 18
18	237-8010	1	O-RING, 10-1, Cl 8, .755" ID x .097" Thk,
19	326380A1	1	ELBOW, Inc. 20
20	237-8010	1	O-RING, 10-1, Cl 8, .755" ID x .097" Thk,
21	J943442	1	TUBE,
22	J944988	1	HOSE, 305 mm (12 in)
23	451023A1	1	INDICATOR, Fuel Restriction (If Equipped)
24	250838A2	1	CONNECTOR, ELEC, Inc. 25 (If Equipped)
25	637-72081	1	O-RING, Cl 7, 8.1MM ID x 1.6 Thk, 8,1 ID x 1,6 mm (If Equipped)

MX285 CASE IH MAGNUM TRACTOR (NORTH AMERICA)

03-08 FUEL INJECTION PUMP, MX255 AND MX285

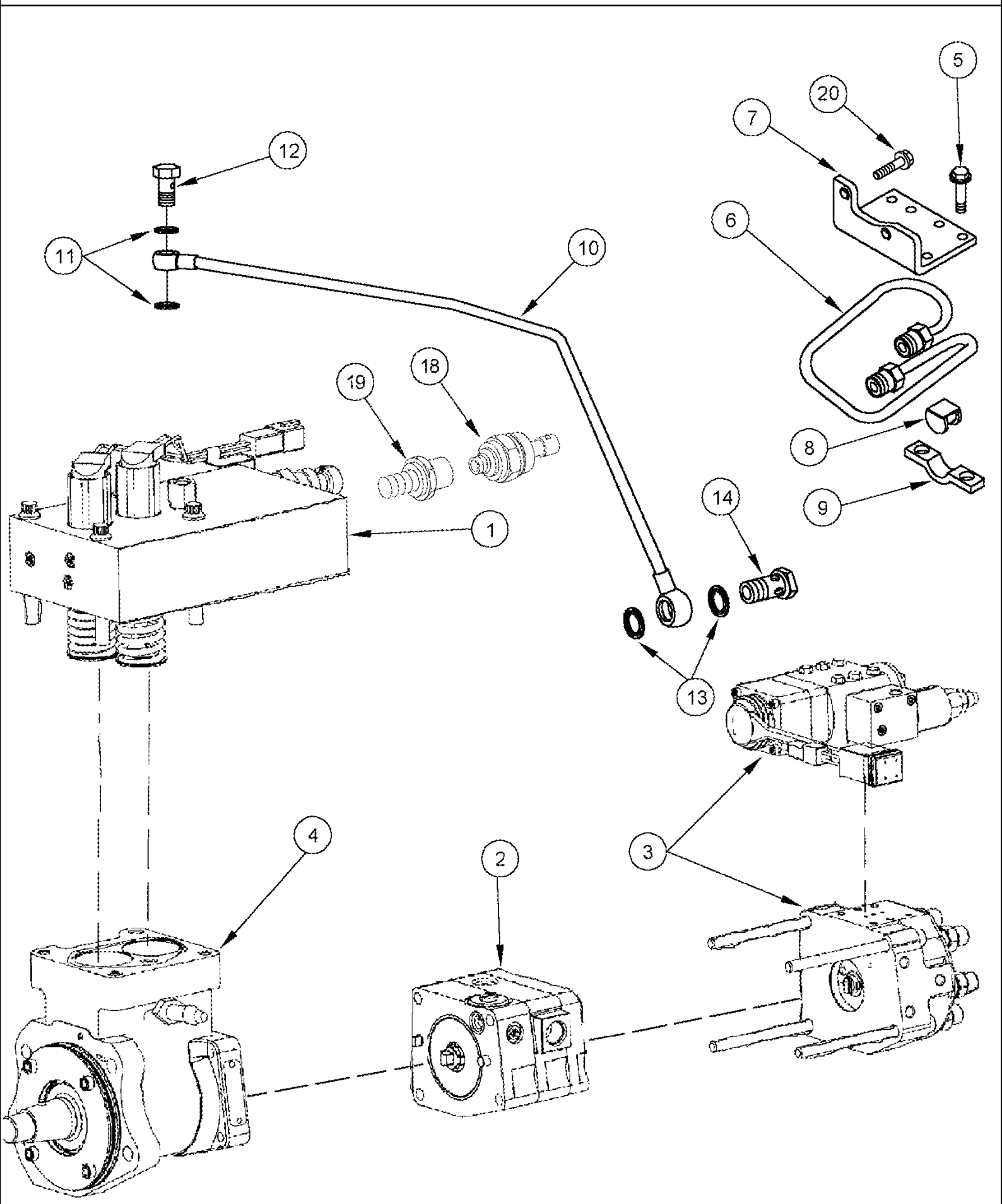

MX285 CASE IH MAGNUM TRACTOR (NORTH AMERICA)

03-08 FUEL INJECTION PUMP, MX255 AND MX285

ссылка	Номер детали	Кол-во	Описание
	J4076442	1	PUMP, FUEL INJECTION, Inc. 1 - 14
	JR4076442	1	REMAN-INJECTION PUMP, Remanufactured, N.A. Only
	JC4076442	1	CORE-INJECTION PUMP, Return Number
1	J4025319	1	KIT, REPAIR, Accumulator, See Figure 03-09
2	J4089074	1	KIT, REPAIR, Gear Pump, See Figure 03-10
3	J4010269	1	KIT, REPAIR, Distributor, See Figure 03-11
4	A77928	1	KIT, REPAIR, Cam Housing, See Figure 03-12
	A77932	1	KIT, Fuel Supply, Inc. 5 - 9
5	NSS	8	NOT SERVICED SEPARATELY, M6 x 20, Bolt, Special
6	NSS	1	NOT SERVICED SEPARATELY, Tube
7	NSS	1	NOT SERVICED SEPARATELY, Bracket
8	NSS	4	NOT SERVICED SEPARATELY, Isolator
9	NSS	4	NOT SERVICED SEPARATELY, Clamp
10	J4010174	1	TUBE,
11	J935170	2	WASHER, SPECIAL,
12	J918002	1	SCREW,
13	J918192	2	RING, PACKING, 14 x 20 x 1 mm
14	J4002006	1	SCREW,
18	J4010051	1	SENDOR, TEMPERATURE,
19	J4010084	1	ADAPTER,
20	J417068	1	SCREW,

03-09 FUEL INJECTION PUMP, MX255 AND MX285

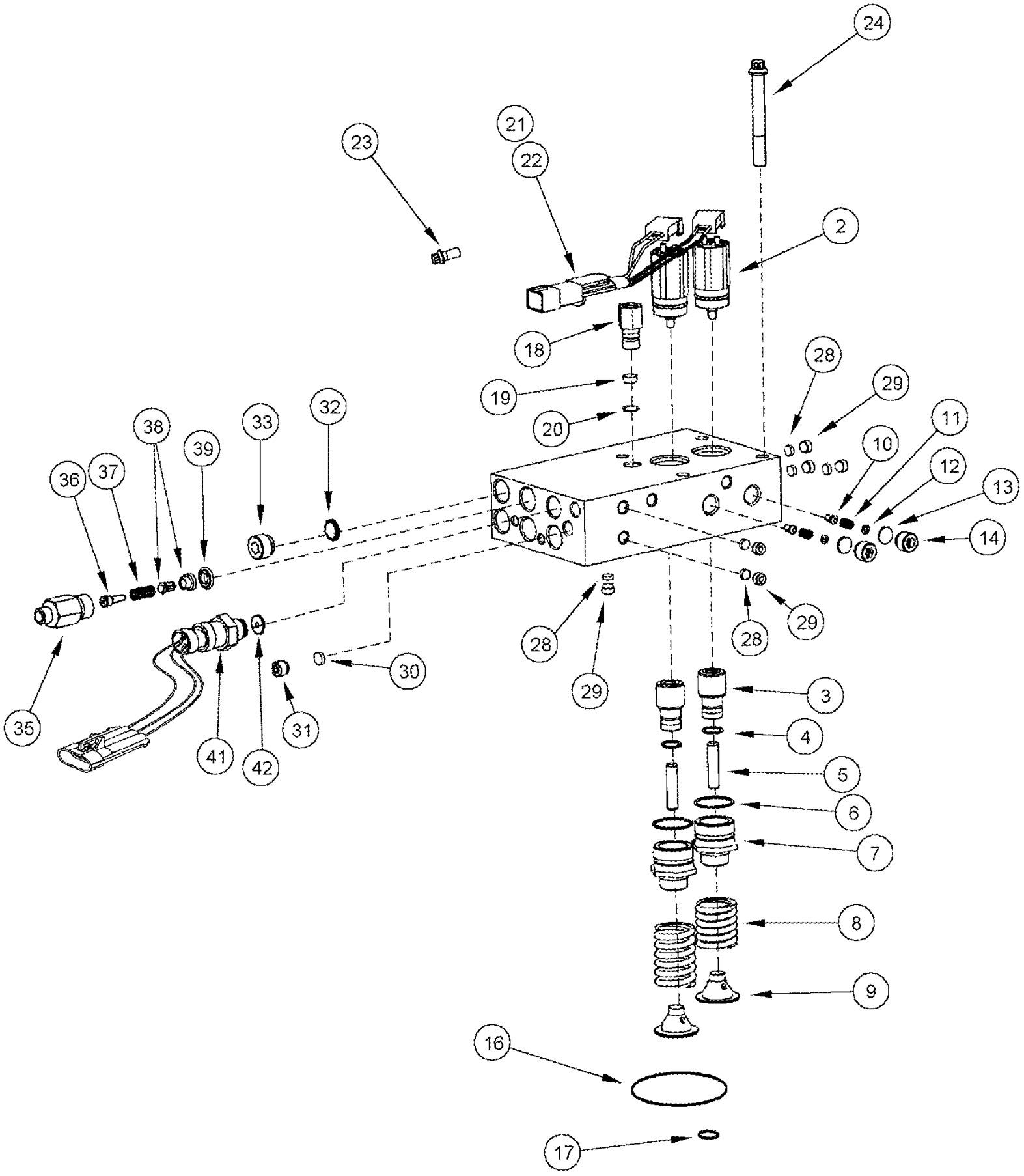

MX285 CASE IH MAGNUM TRACTOR (NORTH AMERICA)

03-09 FUEL INJECTION PUMP, MX255 AND MX285

ссылка	Номер детали	Кол-во	Описание
	J4025319	1	KIT, REPAIR, Accumulator, Inc. 1 - 6, 9 - 42
	JR4025319	1	KIT, REPAIR, Accumulator, Remanufactured, N.A. Only
	JC4025319	1	CORE-ACCUMULATOR, Return Number
1	NSS	1	NOT SERVICED SEPARATELY, Body
2	NSS	2	NOT SERVICED SEPARATELY, Valve, Solenoid
3	NSS	2	NOT SERVICED SEPARATELY, Tappet
4	NSS	2	NOT SERVICED SEPARATELY, Seal
5	NSS	2	NOT SERVICED SEPARATELY, Plunger
6	NSS	2	NOT SERVICED SEPARATELY, Seal
7	NSS	2	NOT SERVICED SEPARATELY, Retainer
8	NSS	2	NOT SERVICED SEPARATELY, Spring
9	NSS	2	NOT SERVICED SEPARATELY, Retainer
10	NSS	2	NOT SERVICED SEPARATELY, Plunger
11	NSS	2	NOT SERVICED SEPARATELY, Spring
12	NSS	2	NOT SERVICED SEPARATELY, Shim
13	NSS	2	NOT SERVICED SEPARATELY, Seat
14	NSS	2	NOT SERVICED SEPARATELY, Plug
16	J4010636	1	O-RING,
17	J867640	1	O-RING,
18	J347925	1	CONNECTOR, ELEC, Drain, Inc. 19
19	NSS	1	NOT SERVICED SEPARATELY, Screen
20	J867043	1	SEAL,
21	J417161	1	HARNESS, Inc. 22
22	J417095	1	CLIP, CABLE,
23	NSS	1	NOT SERVICED SEPARATELY, Bolt
24	J331002	4	SCREW,
	A77966	6	KIT, Inc. 28, 29
28	NSS	1	NOT SERVICED SEPARATELY, Seal
29	NSS	1	NOT SERVICED SEPARATELY, Plug
30	NSS	1	NOT SERVICED SEPARATELY, Seal
31	NSS	1	NOT SERVICED SEPARATELY, Plug
	A77968	4	KIT, Inc. 32, 33
32	NSS	1	NOT SERVICED SEPARATELY, Seal
33	NSS	1	NOT SERVICED SEPARATELY, Plug
	J4010544	1	ADJUSTER, Inc. 35 - 39
35	NSS	1	NOT SERVICED SEPARATELY, Adapter
36	NSS	1	NOT SERVICED SEPARATELY, Guide
37	NSS	1	NOT SERVICED SEPARATELY, Spring
38	NSS	1	NOT SERVICED SEPARATELY, Seat, Valve
39	J4001869	1	SEAL,
	J4025130	1	KIT, Pressure Sensing, Inc. 41, 42
41	NSS	1	NOT SERVICED SEPARATELY, Sensor
42	J4076375	1	SEAL,

03-10 FUEL INJECTION PUMP, MX255 AND MX285

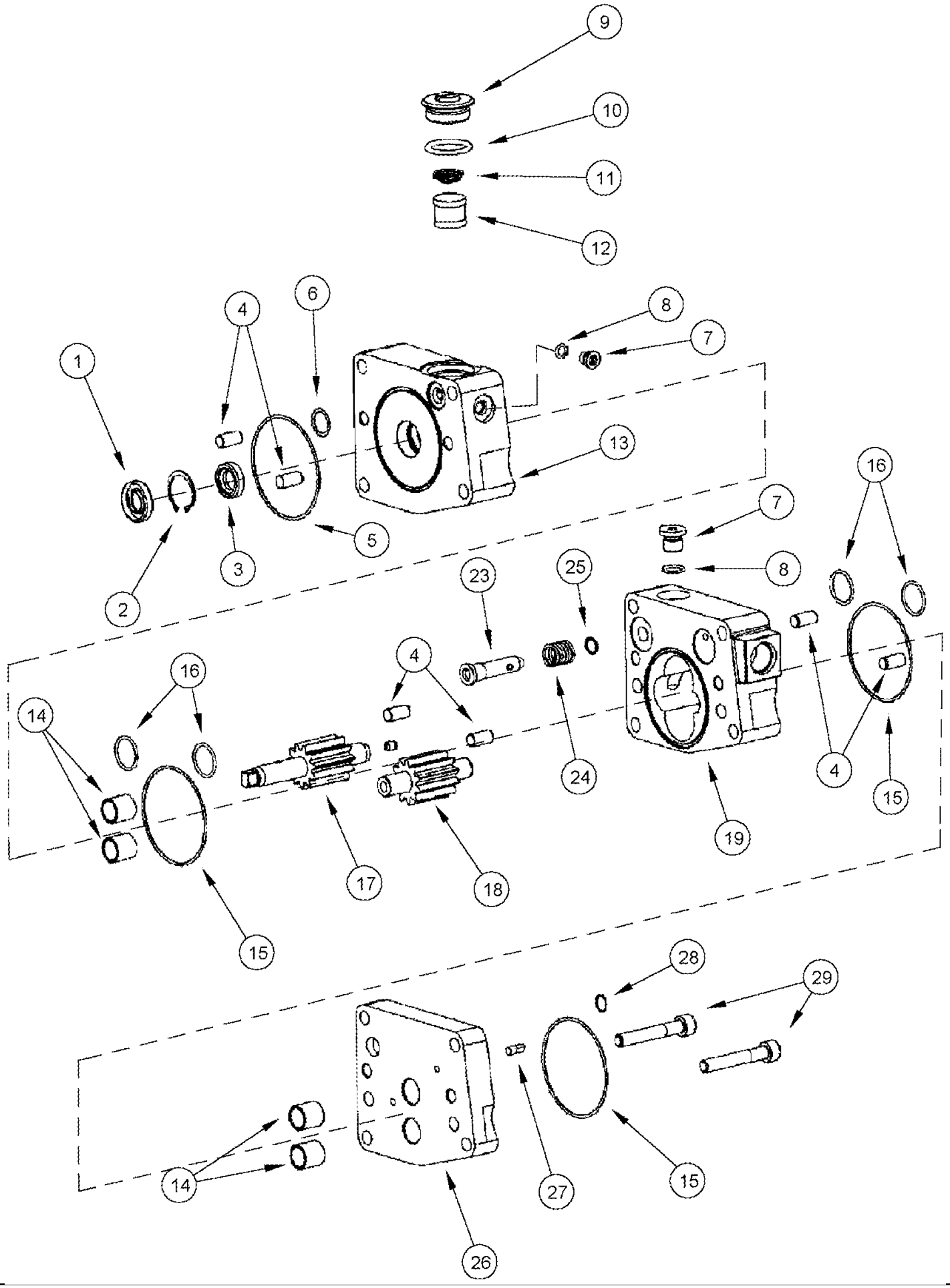

MX285 CASE IH MAGNUM TRACTOR (NORTH AMERICA)

03-10 FUEL INJECTION PUMP, MX255 AND MX285

ссылка	Номер детали	Кол-во	Описание
	J4089074	1	KIT, REPAIR, Gear Pump, Inc. 1 - 29
	JR4089074	1	REMAN-GEAR, Gear Pump, Remanufactured, N.A. Only
	JC4089074	1	CORE-INJECTION PUMP, Return Number
1	NSS	1	NOT SERVICED SEPARATELY, Seal
2	NSS	1	NOT SERVICED SEPARATELY, Ring, Retaining
3	NSS	1	NOT SERVICED SEPARATELY, Seal
4	NSS	6	NOT SERVICED SEPARATELY, Pin, Dowel
5	J867642	1	O-RING,
6	J867641	1	O-RING,
7	J678610	2	PLUG, Inc. 8
8	J678603	1	O-RING, 9,3 mm ID x 2,2 mm
9	J4009979	1	CAP,
10	237-8012	1	O-RING, 12-1, CI 8, .924" ID x .116" Thk, 3/4 OD Tube
11	J70700	1	SPRING,
12	J146483	1	SCREEN, Filter
13	NSS	1	NOT SERVICED SEPARATELY, Cover
14	NSS	4	NOT SERVICED SEPARATELY, Bushing
15	J867645	3	O-RING,
16	J3066914	4	O-RING,
17	NSS	1	NOT SERVICED SEPARATELY, Shaft, Drive
18	NSS	1	NOT SERVICED SEPARATELY, Shaft
19	NSS	1	NOT SERVICED SEPARATELY, Housing
	A77972	1	KIT, Plunger, Inc. 23 - 25
23	NSS	1	NOT SERVICED SEPARATELY, Plunger
24	NSS	1	NOT SERVICED SEPARATELY, Spring
25	NSS	1	NOT SERVICED SEPARATELY, Ring, Retaining
26	NSS	1	NOT SERVICED SEPARATELY, Cover
27	NSS	1	NOT SERVICED SEPARATELY, Pin
28	J867480	1	O-RING,
29	NSS	2	NOT SERVICED SEPARATELY, Bolt

03-11 FUEL INJECTION PUMP, MX255 AND MX285

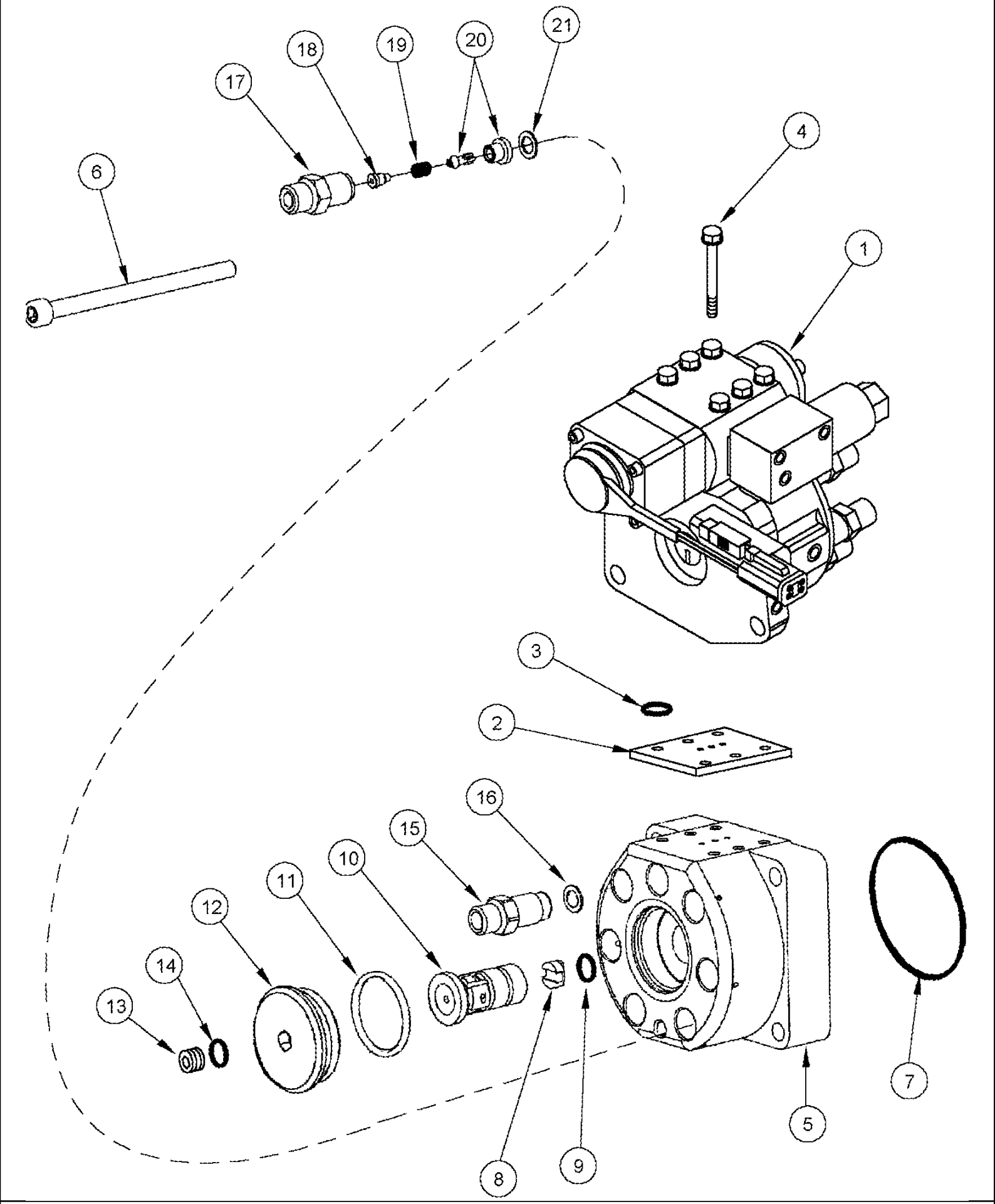

MX285 CASE IH MAGNUM TRACTOR (NORTH AMERICA)

03-11 FUEL INJECTION PUMP, MX255 AND MX285

ссылка	Номер детали	Кол-во	Описание
	J4010269	1	KIT, REPAIR, Distributor, Inc. 1 - 21
	JR4010269	1	KIT, REPAIR, Distributor, Remanufactured, N.A. Only
	JC4010269	1	KIT, SERVICE, Return Number
1	NSS	1	NOT SERVICED SEPARATELY, Valve, Control, Order Distributor Kit or Equalizer Kit
	87440896	1	KIT, Distributor, New
	87441038	1	KIT, Distributor, Remanufactured
	87441045	1	KIT, Core Return Number, Distributor
	87440895	1	KIT, Equalizer, ICV, New
	87441008	1	KIT, Equalizer, ICV, Remanufactured
	87441037	1	KIT, Core Return Number, Equalizer
	87442224	1	KIT, Stator, Inc. 2 - 21
2	NSS	1	NOT SERVICED SEPARATELY, Gasket, Mounting
3	NSS	1	NOT SERVICED SEPARATELY, Seal
4	NSS	6	NOT SERVICED SEPARATELY, Bolt
5	NSS	1	NOT SERVICED SEPARATELY, Housing
6	J347941	4	SCREW,
7	J867645	2	O-RING,
8	J330644	1	HUB,
9	J867480	1	O-RING,
10	NSS	1	NOT SERVICED SEPARATELY, Shaft
11	J348757	1	O-RING,
12	J4002104	1	PLUG,
13	J678923	1	PLUG, 10 mm, Inc. 14
14	J678925	1	O-RING,
	J800867	1	KIT, REPAIR, Inlet, Inc. 15, 16
15	NSS	1	NOT SERVICED SEPARATELY, Connector
16	J4009898	1	DISC,
	J800909	6	KIT, REPAIR, Outlet, Inc. 17 - 21
17	NSS	1	NOT SERVICED SEPARATELY, Connector
18	NSS	1	NOT SERVICED SEPARATELY, Guide
19	NSS	1	NOT SERVICED SEPARATELY, Spring
20	NSS	1	NOT SERVICED SEPARATELY, Seat, Valve
21	J867724	1	SEAL,

MX285 CASE IH MAGNUM TRACTOR (NORTH AMERICA)

03-12 FUEL INJECTION PUMP, MX255 AND MX285

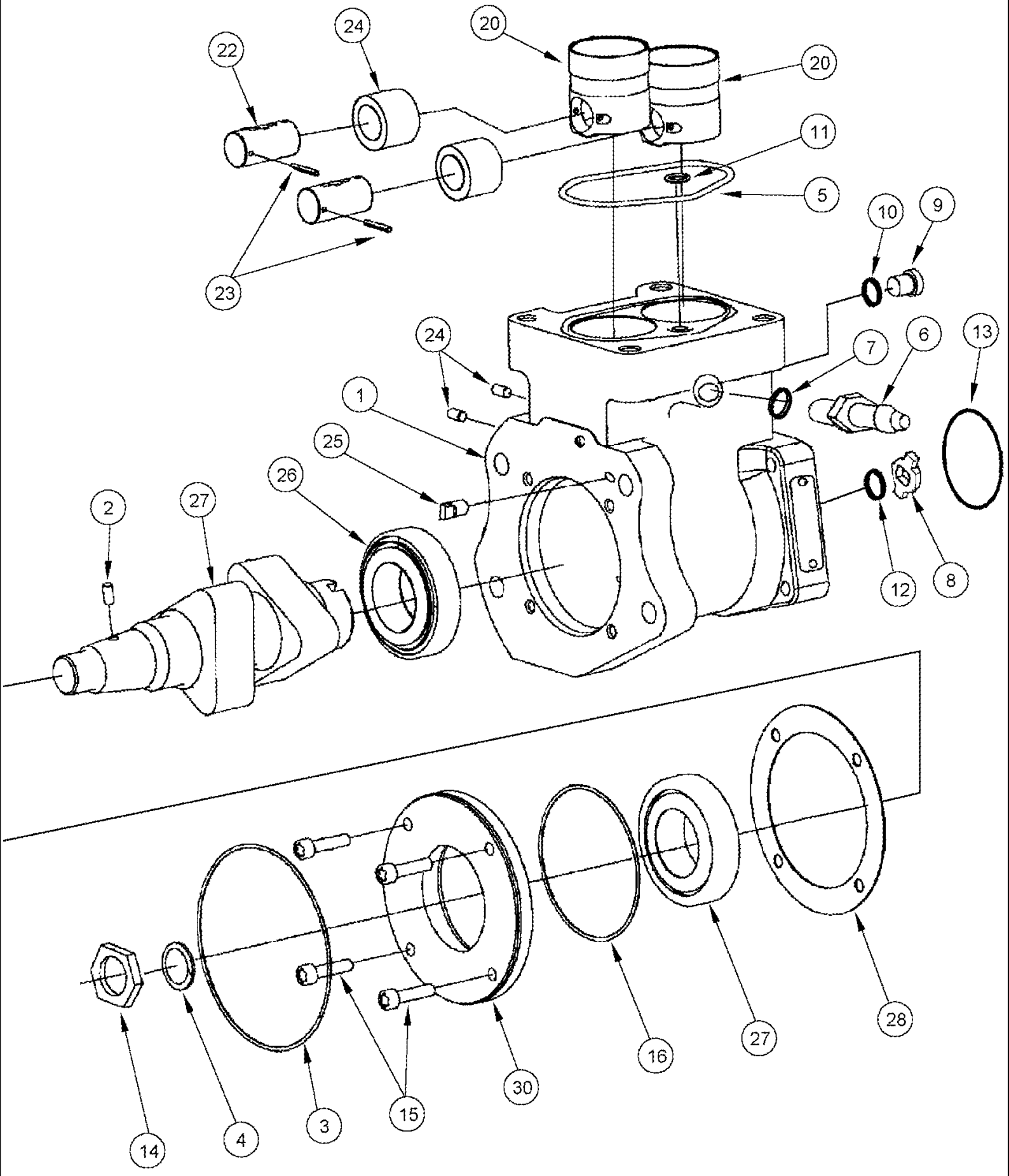

MX285 CASE IH MAGNUM TRACTOR (NORTH AMERICA)

03-12 FUEL INJECTION PUMP, MX255 AND MX285

ссылка	Номер детали	Кол-во	Описание
	A77928	1	KIT, REPAIR, Cam Housing, Inc. 1 - 30
	AR77928	1	KIT, REPAIR, Cam Housing, Remanufactured, N.A. Only
	AC77928	1	CORE-HOUSING, Return Number
1	NSS	1	NOT SERVICED SEPARATELY, Housing
2	J329899	1	PIN,
3	J330081	1	O-RING,
4	J330252	1	WASHER,
5	J4010636	1	O-RING,
6	J348448	1	CONNECTOR, ELEC, Inc. 7
7	J678925	1	O-RING,
8	J417071	1	HUB,
9	J678923	1	PLUG, 10 mm, Inc. 10
10	J678925	1	O-RING,
11	J867640	1	O-RING,
12	J867641	1	O-RING,
13	J867642	1	O-RING,
14	J926593	1	NUT, M20 x 1,5
15	NSS	4	NOT SERVICED SEPARATELY, Bolt
16	NSS	1	NOT SERVICED SEPARATELY, O-Ring
20	NSS	2	NOT SERVICED SEPARATELY, Tappet
21	NSS	2	NOT SERVICED SEPARATELY, Roller
22	NSS	2	NOT SERVICED SEPARATELY, Pin
23	NSS	2	NOT SERVICED SEPARATELY, Pin, Roll
24	NSS	2	NOT SERVICED SEPARATELY, Pin, Dowel
25	NSS	1	NOT SERVICED SEPARATELY, Pin
26	NSS	1	NOT SERVICED SEPARATELY, Bearing, Roller
27	NSS	1	NOT SERVICED SEPARATELY, Camshaft
28	NSS	1	NOT SERVICED SEPARATELY, Shim
29	NSS	1	NOT SERVICED SEPARATELY, Bearing, Roller
30	NSS	1	NOT SERVICED SEPARATELY, Support

03-13 FUEL INJECTION PUMP - GEAR AND MOUNTING BRACKETS, MX255 AND MX285

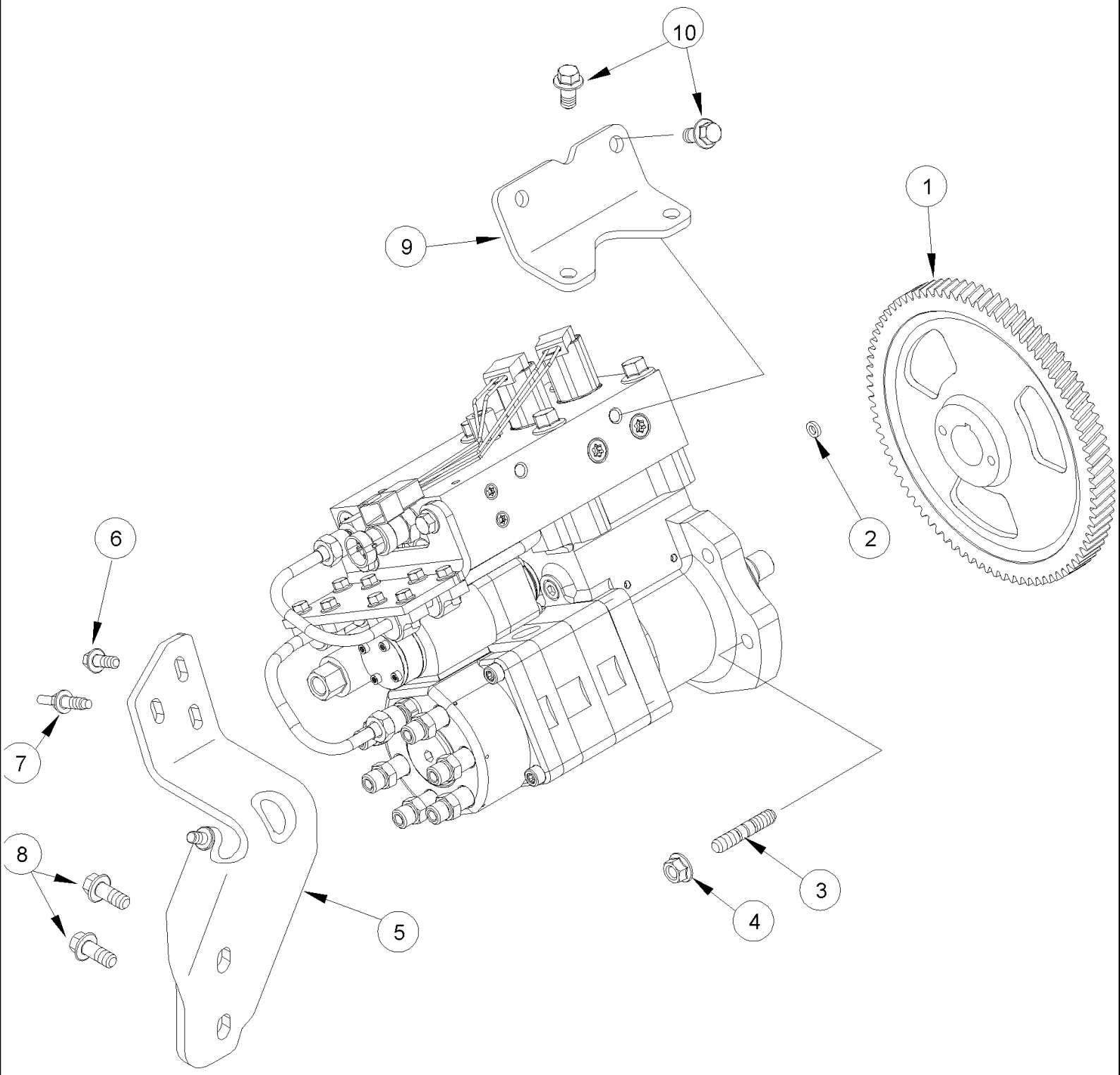

MX285 CASE IH MAGNUM TRACTOR (NORTH AMERICA)

03-13 FUEL INJECTION PUMP - GEAR AND MOUNTING BRACKETS, MX255 AND MX285

сылка	Номер детали	Кол-во	Описание
1	J942764	1	GEAR,
2	J926722	1	SEAL,
3	86991263	4	STUD, 55 mm (2-5/32 in)
4	825-2410	4	NUT, M10 x 1.5, Flg, Cl 8, M10
5	J943440	1	SUPPORT,
6	845-8020	2	BOLT, Hex Flg, M8 x 20, 8.8, Full Thd, M8 x 20; 8.8
7	J909310	1	SCREW, Special
8	844-10025	2	BOLT, Hex Flg, M10 x 25, 8.8, Full Thd, M10 x 20; 8.8
9	J991108	1	SUPPORT,
10	854-10020	4	BOLT, Hex Flg, M10 x 20, 10.9, M10 x 20; 10.9

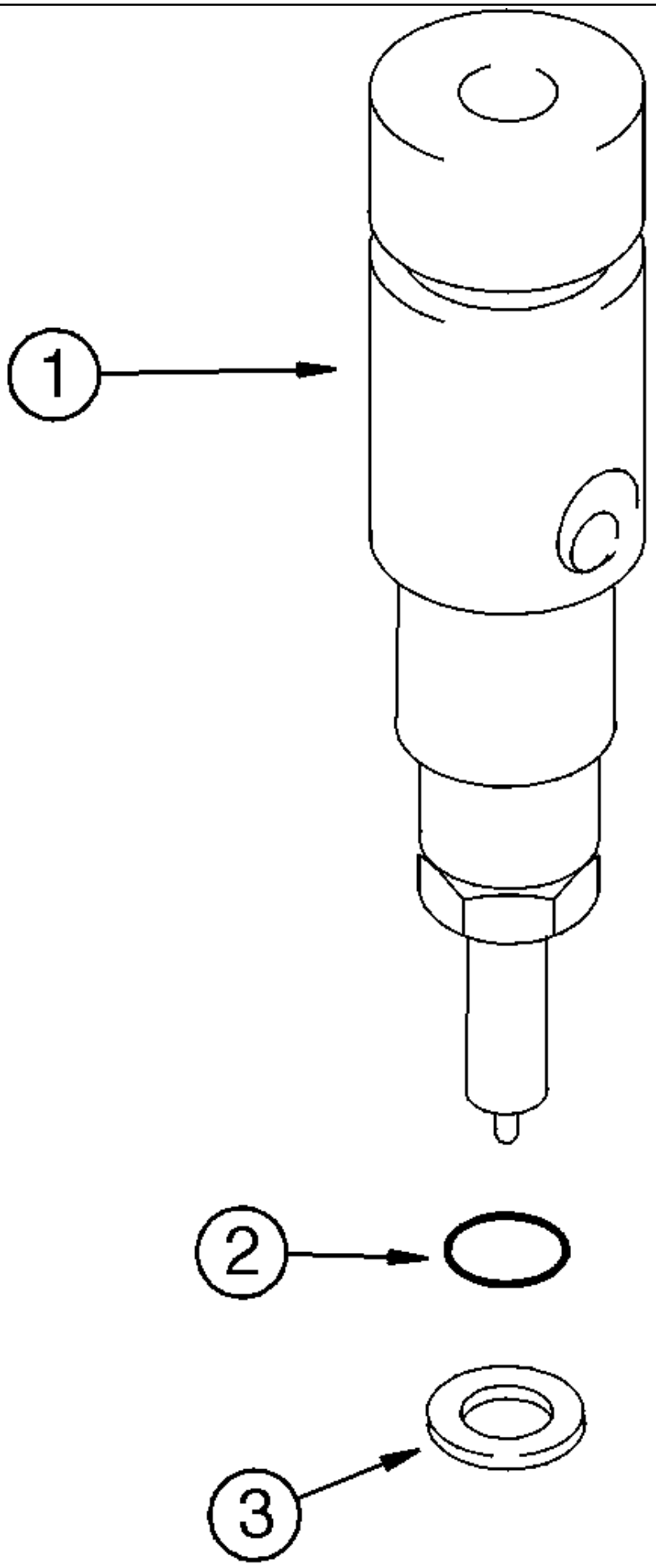
1
2
3

MX285 CASE IH MAGNUM TRACTOR (NORTH AMERICA)

03-15 FUEL INJECTION - NOZZLE , MX255 AND MX285

ссылка	Номер детали	Кол-во	Описание
	JR948529	1	REMAN-NOZZLE, INJECT, Remanufactured, N.A. Only
	JC948529	1	CORE-NOZZLE, INJECT,
1	J948529	1	INJECTOR ASSY., New, Inc. 2, 3
2	238-7210	1	O-RING, -210, CI 7, .734" ID x .139" Thk,
3	J937142	1	SEAL, 1,5 mm

MX285 CASE IH MAGNUM TRACTOR (NORTH AMERICA)

03-17 HAND THROTTLE, MX255 AND MX285

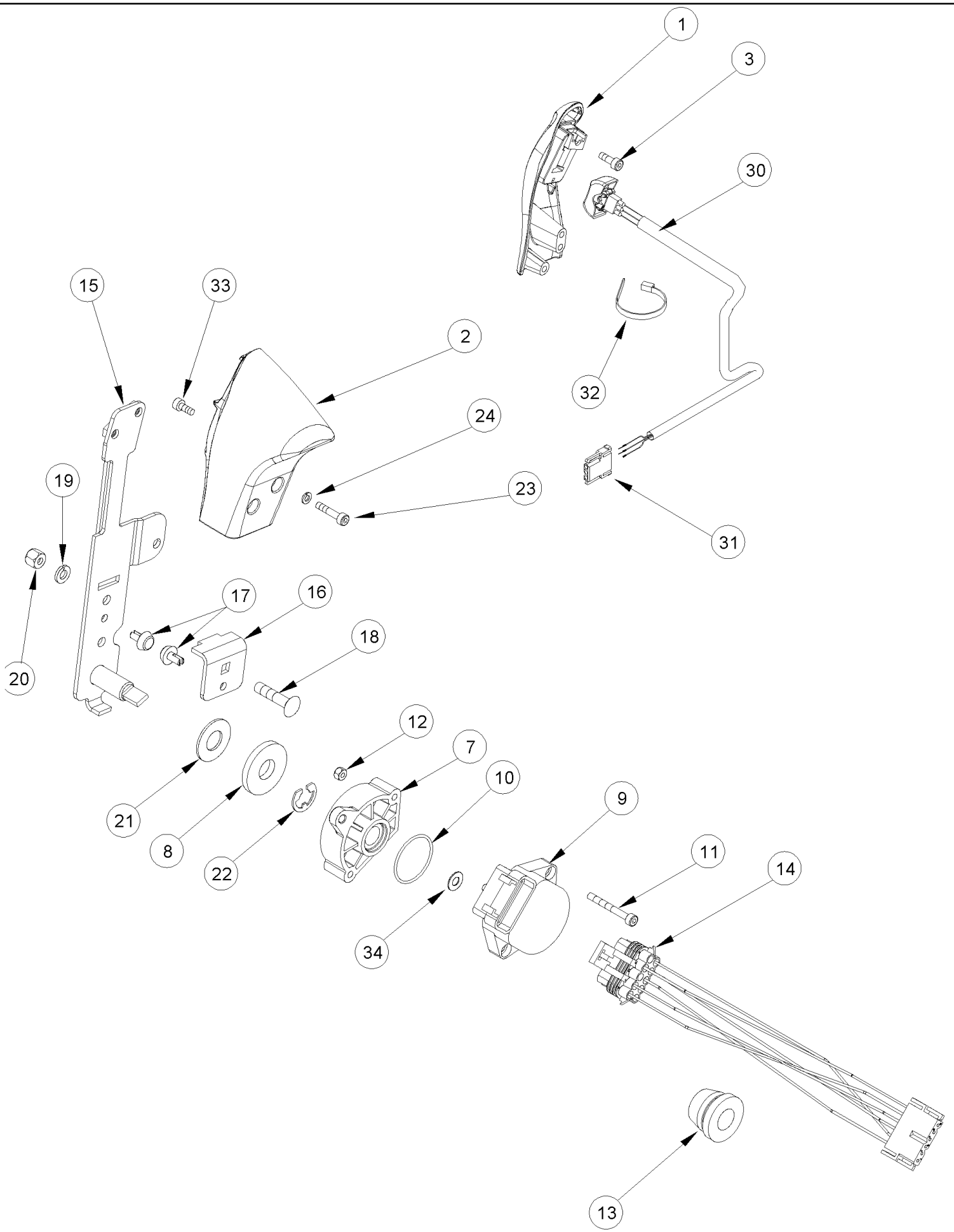

MX285 CASE IH MAGNUM TRACTOR (NORTH AMERICA)

03-17 HAND THROTTLE, MX255 AND MX285

ссылка	Номер детали	Кол-во	Описание
1	316000A2	1	GRIP,
2	293388A2	1	GRIP, Standard And Deluxe Cab
2	359032A1	1	GRIP, Luxury Cab
3	368048A1	3	SCREW, M4 x 12
7	239491A1	1	BUSHING,
8	237486A1	1	WASHER,
9	259012A1	1	POTENTIOMETER,
10	238-6025	1	O-RING, -025, 90 Duro, 1.176" ID x .070" Thk,
11	864-4035	2	SCREW, Hex Soc Hd, M4 x 35, 8.8, M4 x 35; 8.8
12	832-46404	2	NUT, LOCK, M4 x .7, Cl 8, M4; 8
13	182220A1	1	GROMMET,
14	276352A1	1	HARNESS,
15	367607A1	1	SUPPORT,
16	258734A2	1	SUPPORT,
17	259040A1	2	PAD, WEAR,
18	811-6030	1	BOLT, CARRIAGE, Short NK, M6 x 30, Cl8.8, Full Thd, M6 x 30; 8,8
19	892-11006	2	WASHER, LOCK, M6, M6
20	832-10406	1	NUT, M6 x 1, Cl 8, M6; 8
21	495-81022	1	WASHER, 17/32" x 1 1/8" x .060", 17/32 x 1-1/8 x 1/16
22	103-3350	1	RING, LOCKING, #50, .392" Dia, E-Type,
23	864-4020	2	SCREW, Hex Soc Hd, M4 x 20, 8.8,
24	892-11004	2	WASHER, LOCK, M4, M4
30	258010A2	1	SWITCH, Transmission Shift
31	235676A1	1	CONNECTOR,
32	473321C1	2	STRAP, 8 in
33	864-4012	1	SCREW, Hex Soc Hd, M4 x 12, 8.8, M4 x 12
34	895-11004	2	WASHER, M4, 4,3 x 9 x 0,8 mm

03-19 FOOT THROTTLE, MX255 AND MX285

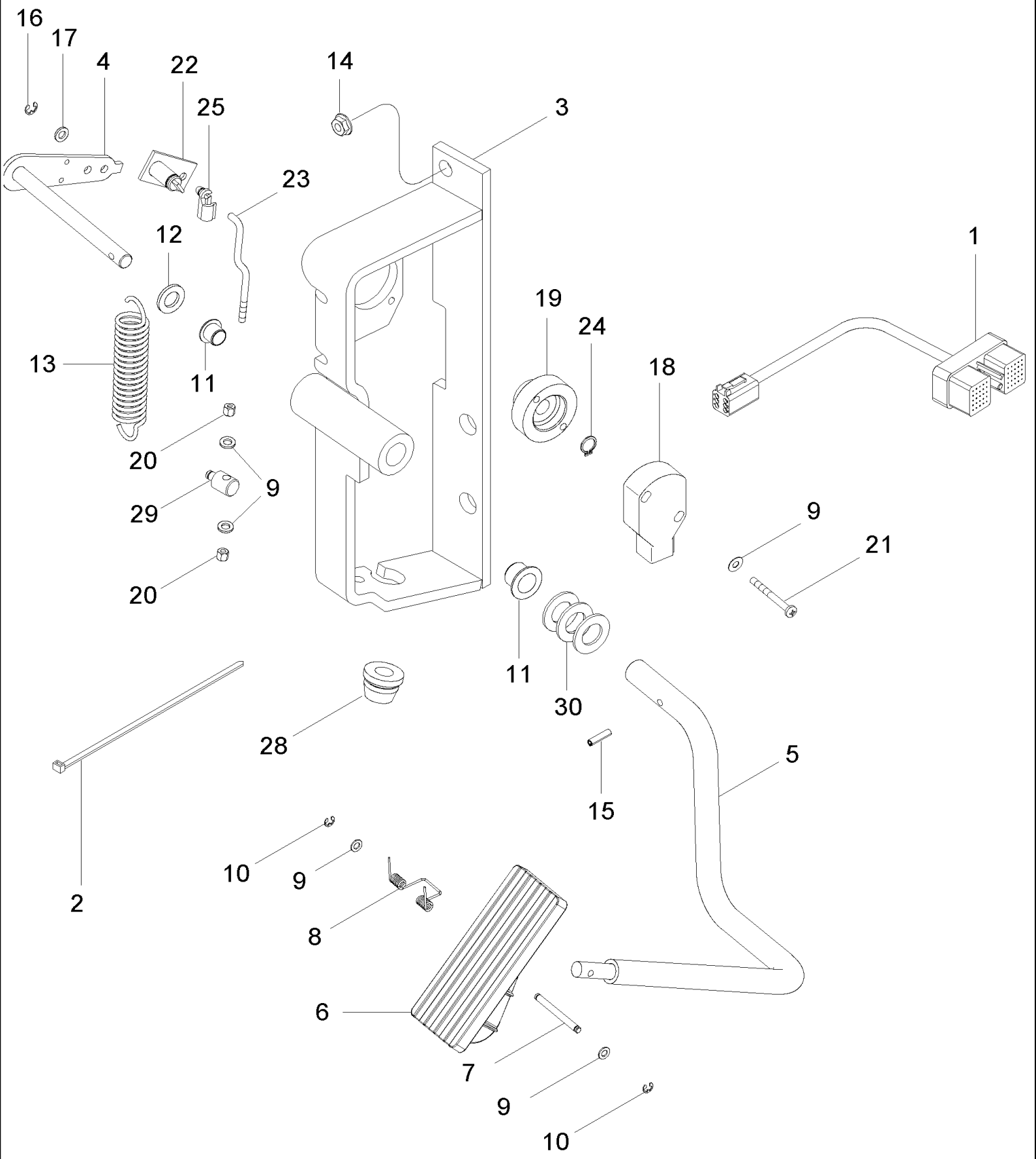

MX285 CASE IH MAGNUM TRACTOR (NORTH AMERICA)

03-19 FOOT THROTTLE, MX255 AND MX285

ссылка	Номер детали	Кол-во	Описание
1	86984487	1	HARNESS,
2	L18337	12	STRAP, CABLE, 9.95"-12.1" lg, 15 in
2	473321C1	3	STRAP,
3	404659A3	1	FRAME,
4	446487A1	1	LEVER,
5	446488A1	1	TUBE ASSY.,
6	297853A2	1	PEDAL,
7	255291A1	1	PIN,
8	256776A1	1	SPRING,
9	895-11005	6	WASHER, M5 x 10 x 1, 5,5 x 10 x 1 mm
10	800-435	2	CIRCLIP, M5, 5 mm
11	1533540C1	2	EYEBOLT,
12	895-11012	1	WASHER, M12 x 24 x 2.5, 13,5 x 24 x 2,5 mm
13	248913A2	1	SPRING,
14	825-2408	3	NUT, M8 x 1.25, Flg, Cl 8,
15	838-3528	1	PIN, M5 x 28, Coiled, 5 x 28 mm
16	800-316	1	CIRCLIP, M6, 6 mm
17	895-11006	1	WASHER, M6, 6,6 x 12 x 1,6 mm
18	231426A1	1	POTENTIOMETER,
19	231410A1	1	BUSHING,
20	832-10405	2	NUT, LOCK, M5 x .8, Cl 8, M5
21	840-1550	2	SCREW, Cross Pan Hd, M5 x 50, M5 x 50; 4,8
22	322108A1	1	SUPPORT,
23	322109A1	1	ROD,
24	800-1112	1	RING, SNAP, M12, Ext, 12 mm
25	60-2404T1	1	RETAINER,
28	182220A1	1	GROMMET,
29	307475A1	1	PIVOT,
30	495-81020	3	WASHER, 17/32" x 1" x .030", 17/32 x 1 x 1/32, Use As Required

MX285 CASE IH MAGNUM TRACTOR (NORTH AMERICA)

03-20 FUEL TANKS

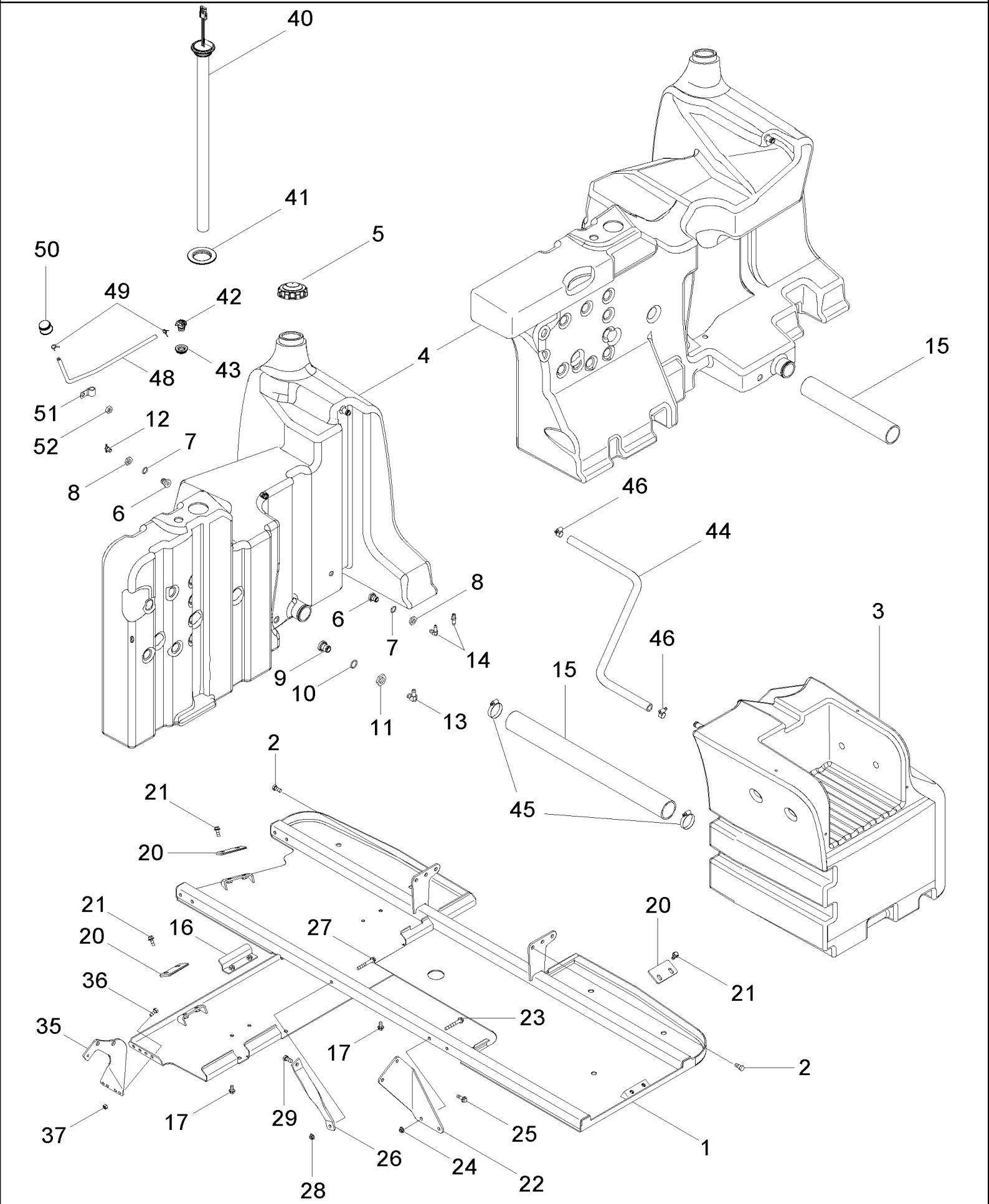

MX285 CASE IH MAGNUM TRACTOR (NORTH AMERICA)

03-20 FUEL TANKS

ссылка	Номер детали	Кол-во	Описание
1	363279A3	1	SUPPORT,
2	627-12025	4	BOLT, Hex, M12 x 25, 10.9, M12 x 25; 10.9
3	255028A4	1	TANK, Fuel, Right Hand, 275 L (73 gal)
4	255029A4	1	FUEL TANK, Left Hand, 235 L (62 gal), Inc. 5 - 14
4	231242A7	1	FUEL TANK, Left Hand, 325 L (86 gal), Inc. 5 - 14
5	257349A1	1	CAP, FILLER,
6	1251790C2	2	FITTING,
7	238-5210	2	O-RING, -210, 70 Duro, .734" ID x .139" Thk,
8	1251791C1	1	NUT,
9	282708A1	1	FITTING,
10	238-5214	1	O-RING, -214, 70 Duro, .984" ID x .139" Thk,
11	282709A1	1	NUT,
12	217-103	1	COCK, DRAIN, 1/4 PT
13	217-290	1	ELBOW, 90є, 1/2" Hose x 3/8" NPTF, Barbed, 90 1/2 barb x 3/8 PT
14	217-293	1	ELBOW, 90є, 3/8" Hose x 1/4" NPTF, Barbed, 90 3/8 barb x 1/4 PT, 235 L (62 gal) Fuel Tank
14	217-125	1	FITTING, 3/8" Hose x 1/4" NPTF, Barbed, 3/8 x 1/4 in, 325 L (86 gal) Fuel Tank
15	283035A1	1	HOSE, , 235 L (62 gal) Fuel Tank
15	275798A1	1	HOSE, , 325 L (86 gal) Fuel Tank
16	315832A1	2	ANGLE, , 235 L (62 gal) Fuel Tank
17	905-10020	2	BOLT, Hex Serr Flg, M10 x 20,
20	243779A4	3	PLATE, LARGE,
21	555-5	6	BOLT, Hex Flg, M10 x 25, 8.8, Full Thd, M10 x 25; 8,8
22	295340A1	1	SUPPORT,
23	857-10075	2	BOLT, Hex Flg, M10 x 75, 10.9, M10 x 70; 10.9
24	825-2410	2	NUT, M10 x 1.5, Flg, Cl 8, M10
25	844-10030	2	BOLT, Hex Flg, M10 x 30, 8.8, Full Thd, M10 x 30; 8.8
26	258942A1	1	STRAP, SECURING,
27	857-10075	1	BOLT, Hex Flg, M10 x 75, 10.9, M10 x 70; 10.9
28	825-2410	1	NUT, M10 x 1.5, Flg, Cl 8, M10
29	627-12025	1	BOLT, Hex, M12 x 25, 10.9, M12 x 25; 10.9
35	301790A3	1	BRACKET,
36	514-745	2	BOLT, Hex, M10 x 25, 8.8, Full Thd, M10 x 20; 8,8
37	829-1510	2	NUT, M10, Cl 10, M10
40	87366602	1	GAUGE, FUEL, Fuel Level
41	255095A1	1	GROMMET,
42	275800A1	1	VALVE STEM,
43	255094A1	1	GROMMET,
44	275799A2	1	HOSE,
45	214-3248	2	CLAMP, HOSE, 2.25/3.125 HD Worm, W/liner, 2-1/4 x 3-1/8
46	214-1516	2	CLAMP, HOSE, #16, .81/1.50 Type F Worm, W/liner, 13/16 - 1-1/2
48	275801A1	1	HOSE,
49	214-1308	2	CLAMP, HOSE, #8, 1/2", Spring, 1/2
50	316078A2	1	BREATHER,
51	515-22159	1	CLAMP, 5/8", Insul, 5/16" Bolt, 5/8 ID
52	825-2408	1	NUT, M8 x 1.25, Flg, Cl 8,

MX285 CASE IH MAGNUM TRACTOR (NORTH AMERICA)

03-23 FUEL LINES WITH INLINE FILTER, MX255 AND MX285

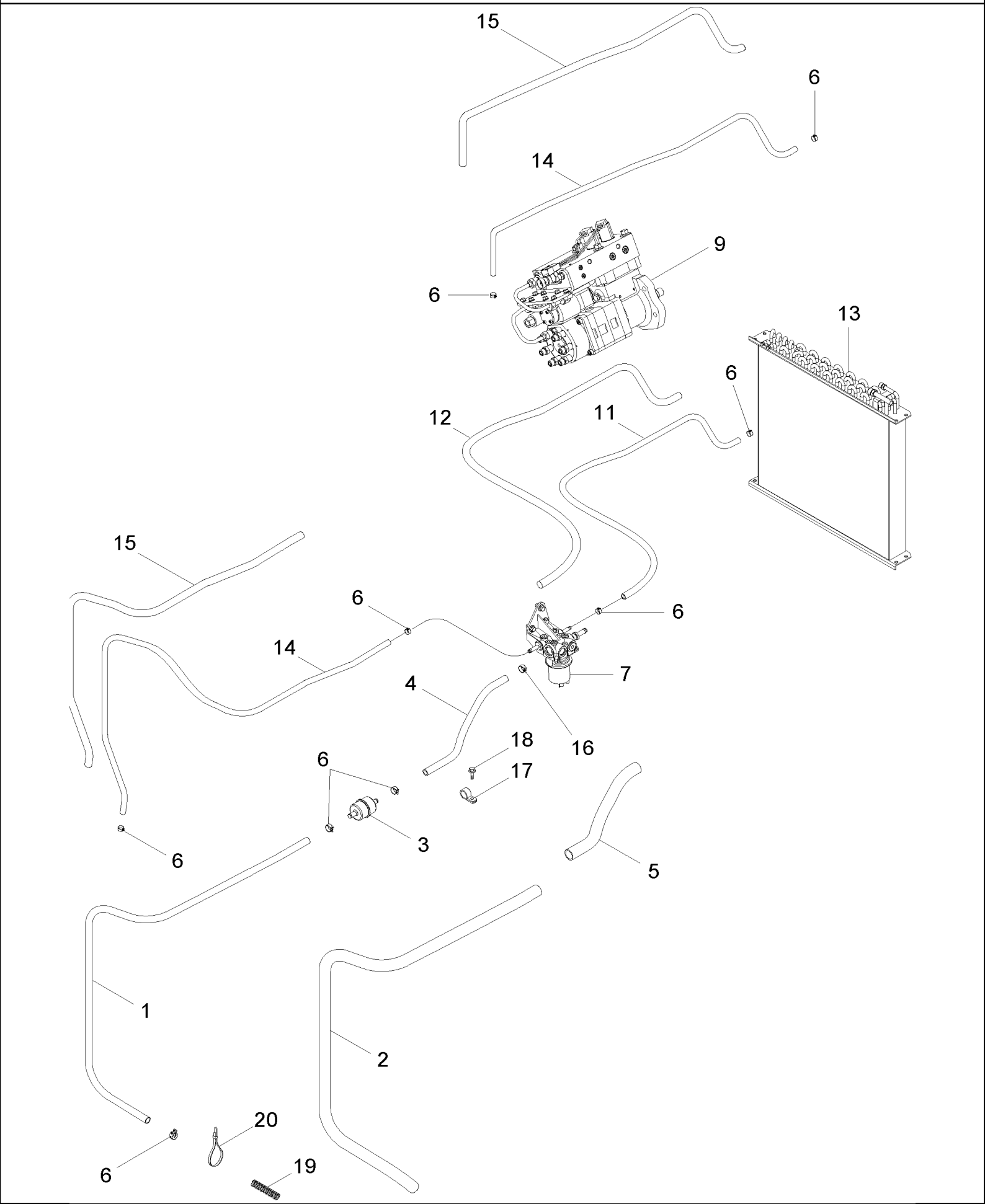

MX285 CASE IH MAGNUM TRACTOR (NORTH AMERICA)

03-23 FUEL LINES WITH INLINE FILTER, MX255 AND MX285

ссылка	Номер детали	Кол-во	Описание
1	87404609	1	HOSE, 1380 mm (54-11/32 in)
2	87404610	1	CONDUIT, 1310 mm (51-9/16 in)
3	194199A1	1	FILTER, STRAINER,
4	87404615	1	HOSE, 735 mm (28-15/16 in)
5	87404616	1	CONDUIT, 665 mm (26-3/16 in)
6	1348264C1	6	CLAMP, HOSE, 3/8 ID
7	REF	1	INSTRUCTION, Pump, See Figure 03-05
9	J4076442	1	PUMP, FUEL INJECTION, , See Figure 03-08
11	292457A2	1	HOSE, 1415 mm (56 in), Cut From 284736A2
12	291507A2	1	CONDUIT, 1345 mm (53 in), Cut From 291262A2
13	REF	1	INSTRUCTION, Cooler, See Figure 09-38
14	327835A1	2	HOSE, 1865 mm (74 in) , Cut From 284736A2
15	327836A1	2	HOSE, 1795 mm (71 in) , Cut From 291262A2
16	196252A1	4	CLAMP,
17	229357A1	1	CLAMP,
18	844-8012	1	BOLT, Hex Flg, M8 x 12, 8.8, Full Thd, M8 x 12; 8.8
19	87435416	1	SPRING, Fuel Hose Guard, ASN JAZ129998
20	L18331	1	STRAP, CABLE, Tie, ASN JAZ129998

MX285 CASE IH MAGNUM TRACTOR (NORTH AMERICA)

03-24 FUEL LINES WITH SEPARATOR FILTER, MX255 AND MX285

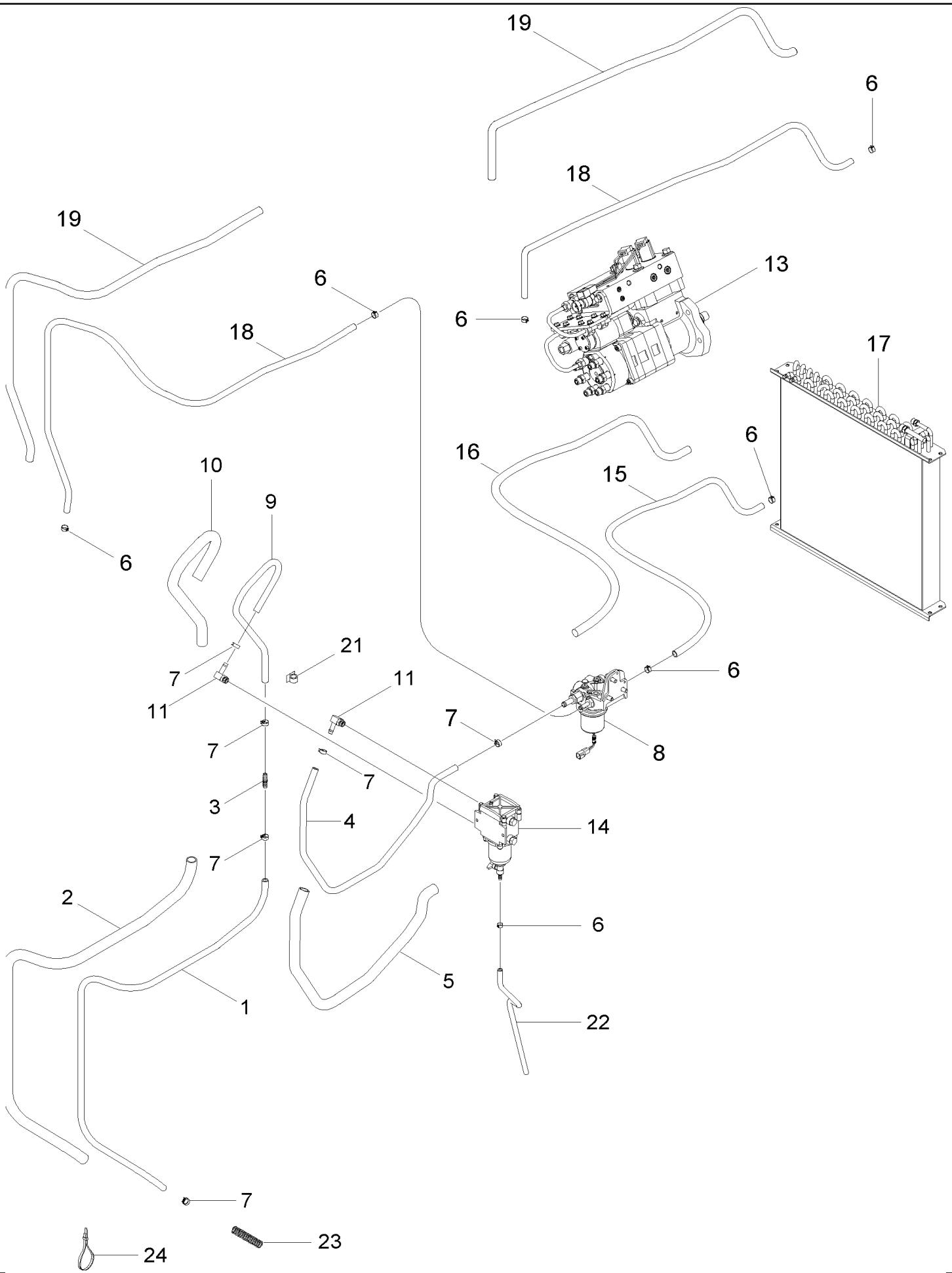

MX285 CASE IH MAGNUM TRACTOR (NORTH AMERICA)

03-24 FUEL LINES WITH SEPARATOR FILTER, MX255 AND MX285

сылка	Номер детали	Кол-во	Описание
1	284735A2	1	HOSE, 1570 mm (61-13/16 in)
2	291260A2	1	CONDUIT, 1500 mm (59 in)
3	336427A1	1	COUPLING, Hose, 1/2 in
4	87447003	1	HOSE, Fuel Filter Outlet, 1090 mm (42-29/32 in)
5	87447004	1	CONDUIT, 1000 mm (39-3/8 in)
6	1348264C1	7	CLAMP, HOSE, 3/8 ID
7	214-1408	6	CLAMP, HOSE, #08, 0.50/0.91 Type F Worm, 1/2 - 29/32
8	REF	1	INSTRUCTION, Pump, See Figure 03-05
9	356412A1	1	HOSE, Fuel Filter Supply, 900 mm (35-7/16 in)
10	356414A1	1	CONDUIT, 830 mm (32-11/16 in)
11	217-348	2	ELBOW, 90є, 1/2" Hose x 3/4"-16 ORB Beaded, 1/2 stem x 3/4 Or
13	REF	1	INSTRUCTION, Pump, Injection, See Figure 03-08
14	336429A2	1	FILTER, FUEL, , See Figure 03-25
15	292457A2	1	HOSE, 1415 mm (56 in), Cut From 284736A2
16	291507A2	1	CONDUIT, 1345 mm (53 in), Cut From 291262A2
17	REF	1	INSTRUCTION, Cooler, See Figure 09-38
18	327835A1	2	HOSE, 1865 mm (74 in) , Cut From 284736A2
19	327836A1	2	HOSE, 1795 mm (71 in) , Cut From 291262A2
21	169850C2	1	ANCHOR,
22	360525A1	1	HOSE, Filter Drain, 700 mm (27-9/16 in)
23	87435416	2	SPRING, Fuel Hose Guard
24	L18331	2	STRAP, CABLE, Tie

MX285 CASE IH MAGNUM TRACTOR (NORTH AMERICA)

03-25 FUEL SEPARATOR FILTER

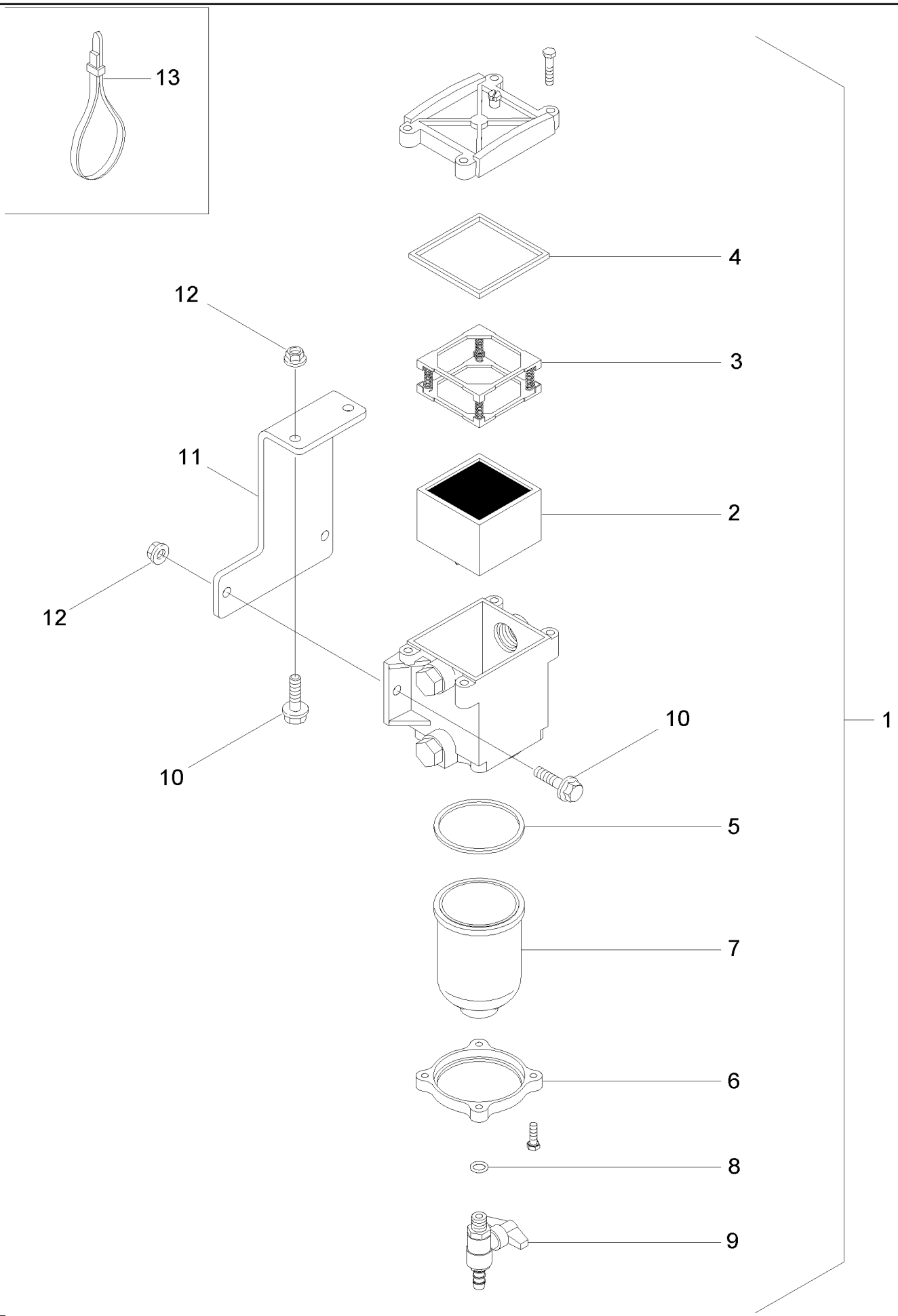

MX285 CASE IH MAGNUM TRACTOR (NORTH AMERICA)

03-25 FUEL SEPARATOR FILTER

ссылка	Номер детали	Кол-во	Описание
1	336429A2	1	FILTER, FUEL, Inc. 2 - 9
2	336430A1	1	FILTER, ELEMENT,
3	336431A1	1	FRAME,
4	336432A1	1	SEAL,
5	336433A1	1	SEAL,
6	369841A1	1	RING,
7	369842A1	1	COVER, FILTER,
8	369843A1	1	GASKET,
9	369844A1	1	DRAINCOCK/TAP, SUPPLY,
10	844-8025	4	BOLT, Hex Flg, M8 x 25, 8.8, M8 x 25
11	352416A2	1	SUPPORT,
12	825-2408	4	NUT, M8 x 1.25, Flg, Cl 8,
13	A169433	1	STRAP, SECURING,

MX285 CASE IH MAGNUM TRACTOR (NORTH AMERICA)

04-02 HARNESS - ENGINE, MX255 AND MX285

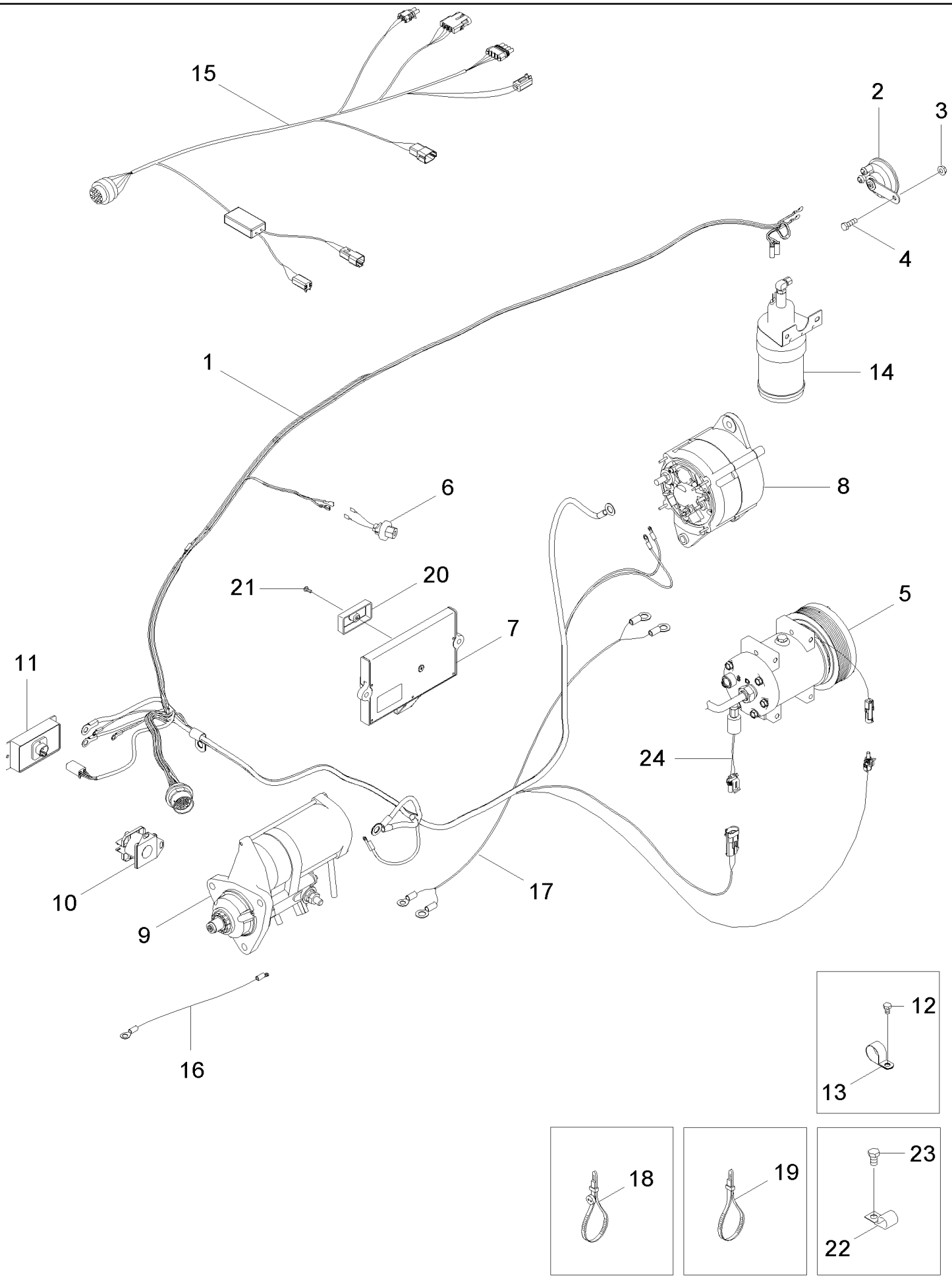

MX285 CASE IH MAGNUM TRACTOR (NORTH AMERICA)

04-02 HARNESS - ENGINE, MX255 AND MX285

ссылка	Номер детали	Кол-во	Описание
1	87403845	1	HARNESS, Engine, BSN JAZ135316
1	87452521	1	HARNESS, Engine, ASN JAZ135316
2	87049215	1	HORN,
3	825-5148	1	NUT, M8, Flg Ser,
4	614-8025	1	BOLT, Hex, M8 x 25, 8.8,
5	REF	1	INSTRUCTION, Compressor Assy, See Figure 09-37
6	79081900	1	SWITCH, PRESSURE, Air Filter
7	REF	1	INSTRUCTION, Module, See Figure 04-04
8	REF	1	INSTRUCTION, Alternator Assy, See Figure 04-17, BSN JAZ135316
8	REF	1	INSTRUCTION, Alternator Assy, See Figure 04-17A, ASN JAZ135316
9	REF	1	INSTRUCTION, Starter Assy, See Figure 04-19
10	REF	1	INSTRUCTION, Solenoid, See Figure 04-21
11	REF	1	INSTRUCTION, Terminator, See Figure 04-21
12	515-23317	1	CLAMP, 1 1/4", Insul, 3/8" Bolt, 1-1/4 ID
13	336199	1	SCREW, Hex, M8 x 12, 8.8, Full Thd,
14	REF	1	INSTRUCTION, Solenoid Assy, Ether Start, See Figure 02-07
15	86983667	1	HARNESS, Engine Adapter, MX255, BSN JAZ128063
15	86983667	1	HARNESS, Engine Adapter, MX285, BSN JAZ128059
15	87414567	1	HARNESS, Engine Adapter, MX255, ASN JAZ128064
15	87414567	1	HARNESS, Engine Adapter, MX285, ASN JAZ128060
16	86985347	1	HARNESS, Solenoid to Starter
17	86983670	1	HARNESS, Alternator to Starter, BSN JAZ135316
17	87452818	1	HARNESS, Alternator to Starter, ASN JAZ135316
18	87403339	2	STRAP, CABLE,
19	L18337	4	STRAP, CABLE, 9.95"-12.1" lg, 15 in
20	279267A1	1	PLUG,
21	490-1108	1	SCREW, Cross Pan Hd, #10-32 x 1/2", No. 10 x 1/2
22	229354A1	1	CLAMP,
23	615-12020	1	BOLT, Hex, M12 x 20, 8.8, Full Thd, M12 x 20; 8,8
24	284273A2	1	SWITCH,

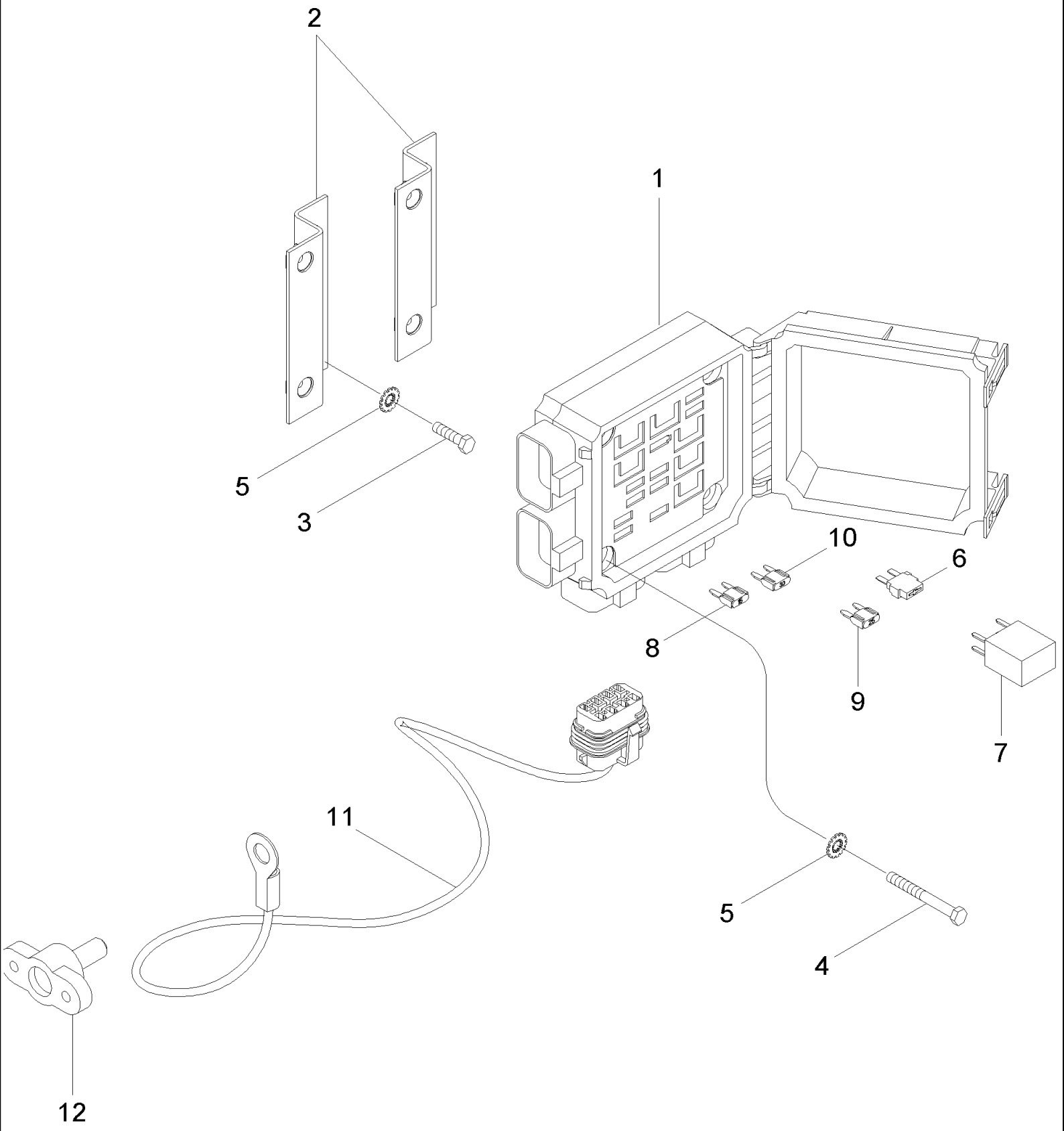
2
1
5
3
10
6
8
9
7
11
5
4
12

MX285 CASE IH MAGNUM TRACTOR (NORTH AMERICA)

04-03 POWER DISTRIBUTION

ссылка	Номер детали	Кол-во	Описание
1	441480A2	1	BOX, FUSE, Engine
2	87410072	2	BRACKET, Fuse Box
3	463-11012	4	SCREW, Hex Hd, #10-24 x 3/4", No. 10 x 3/4
4	363-11028	4	SCREW, Hex Hd, #10-24 x 1 3/4", No. 10 x 1-3/4
5	493-11020	8	WASHER, LOCK, Ext-Int Tooth, #10, No. 10
6	416569A1	1	DIODE-ELEMENT,
7	416570A1	5	RELAY, , MX210, MX230
7	416570A1	4	RELAY, , MX255, MX285
8	121413A1	AR	FUSE, 15 Amp
9	121415A1	AR	FUSE, 25 Amp
10	121416A1	AR	FUSE, 30 Amp
11	441479A2	1	HARNESS, Tractor Auxiliary Power
12	441483A1	1	CONNECTOR, TERMINAL, Auxiliary Power

04-04 MODULE, ENGINE CONTROL, MX255 AND MX285

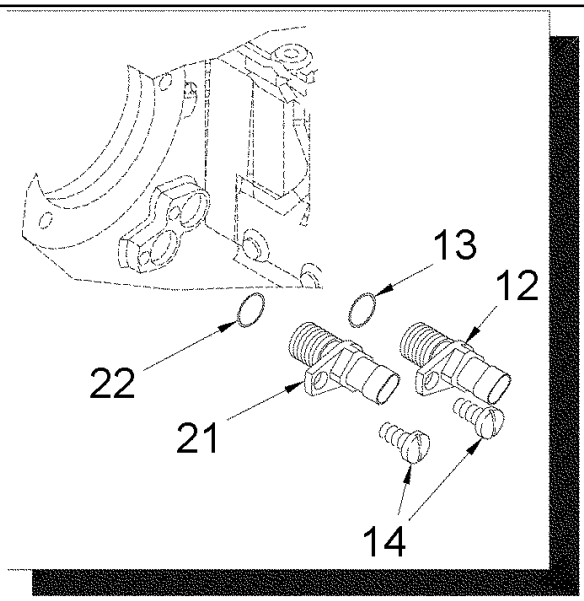

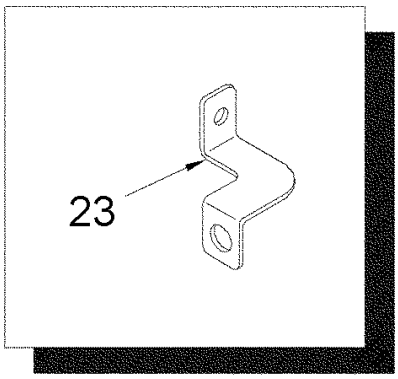

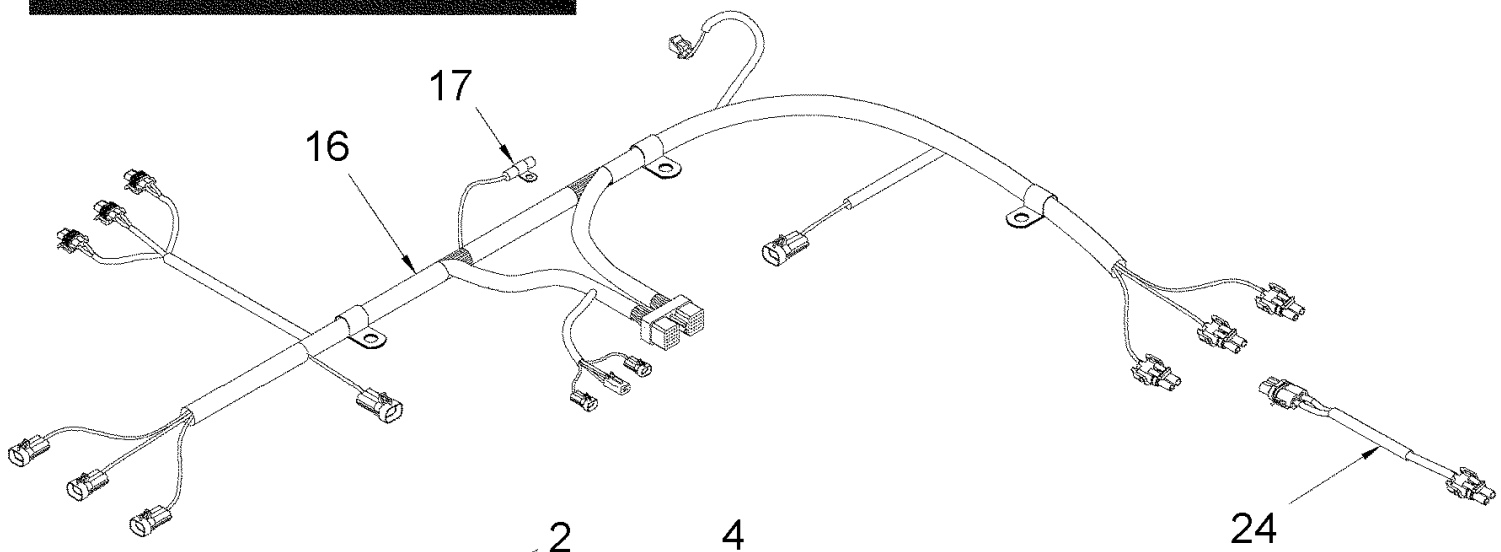

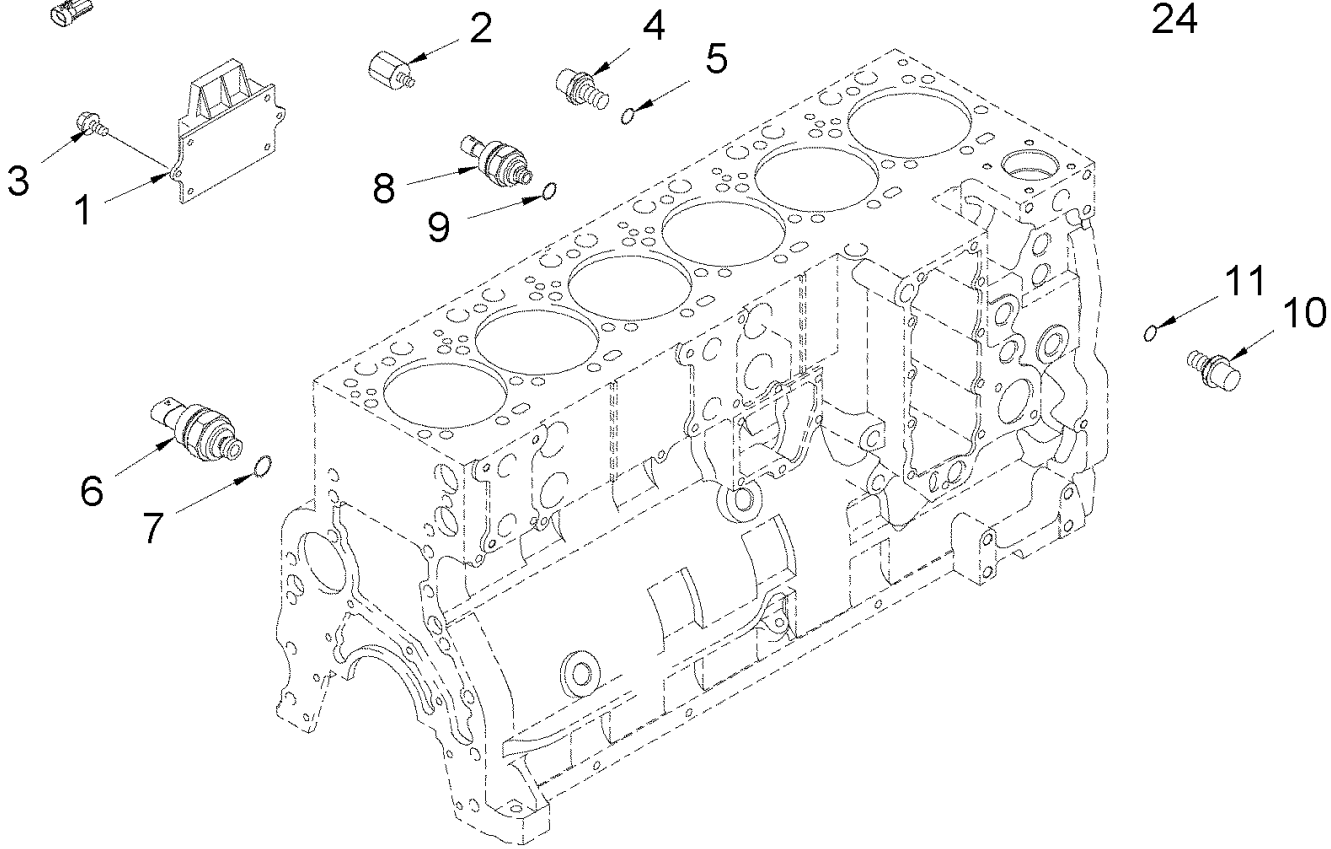

MX285 CASE IH MAGNUM TRACTOR (NORTH AMERICA)

04-04 MODULE, ENGINE CONTROL, MX255 AND MX285

ссылка	Номер детали	Кол-во	Описание
	JR944125	1	REMAN-MONITOR ELECTR, Control, Remanufactured
	JC944125	1	ELECTRONIC UNIT, CONTROL,
1	J944125	1	ELECTRONIC UNIT, CONTROL, New
2	J936236	2	SPACER,
3	845-8020	3	BOLT, Hex Flg, M8 x 20, 8.8, Full Thd, M8 x 20; 8.8
4	J348747	1	SENSOR, Pressure, Inc. 5
5	J330202	1	O-RING, 11,3 ID x 2,2 mm
6	87400188	1	SENSOR, Pressure, Inc. 7
7	J330202	1	O-RING, 11,3 ID x 2,2 mm
8	J408345	1	SENSOR, Temperature, Inc. 9
9	J678912	1	O-RING, 11,3 ID x 2,2 mm
10	J865346	1	SENSOR, Inc. 11
11	J678912	1	O-RING, 11,3 ID x 2,2 mm
12	J4002064	1	SENSOR, Position, Inc. 13
13	J330478	1	O-RING,
14	844-6016	2	BOLT, Hex Flg, M6 x 16, 8.8,
16	87404234	1	HARNESS, WIRE, Inc. 17, MX255, BSN JAZ128063
16	87404234	1	HARNESS, WIRE, Inc. 17, MX285, BSN JAZ128059
16	87416065	1	HARNESS, WIRE, Inc. 17, 24, MX255, ASN JAZ128064
16	87416065	1	HARNESS, WIRE, Inc. 17, 24, MX285, ASN JAZ128060
17	J944110	1	SUPPRESSOR, Used With 18, 19, 20
18	313490A1	6	BOLT, M10 x 14, Not Illustrated
19	825-2408	1	NUT, M8 x 1.25, Flg, Cl 8, Not Illustrated
20	825-2406	1	NUT, M6 x 1, Flg, Cl 8, Not Illustrated
21	87400183	1	SENSOR, Inc. 22
22	87400235	1	O-RING,
23	87414641	1	BRACKET, Mounting, Engine Harness, MX255, ASN JAZ128064
23	87414641	1	BRACKET, Mounting, Engine Harness, MX285, ASN JAZ128060
24	87428093	1	HARNESS, WIRE, Coolant, MX255, ASN JAZ128064
24	87428093	1	HARNESS, WIRE, Coolant, MX285, ASN JAZ128060

MX285 CASE IH MAGNUM TRACTOR (NORTH AMERICA)

04-05 HARNESS - CHASSIS

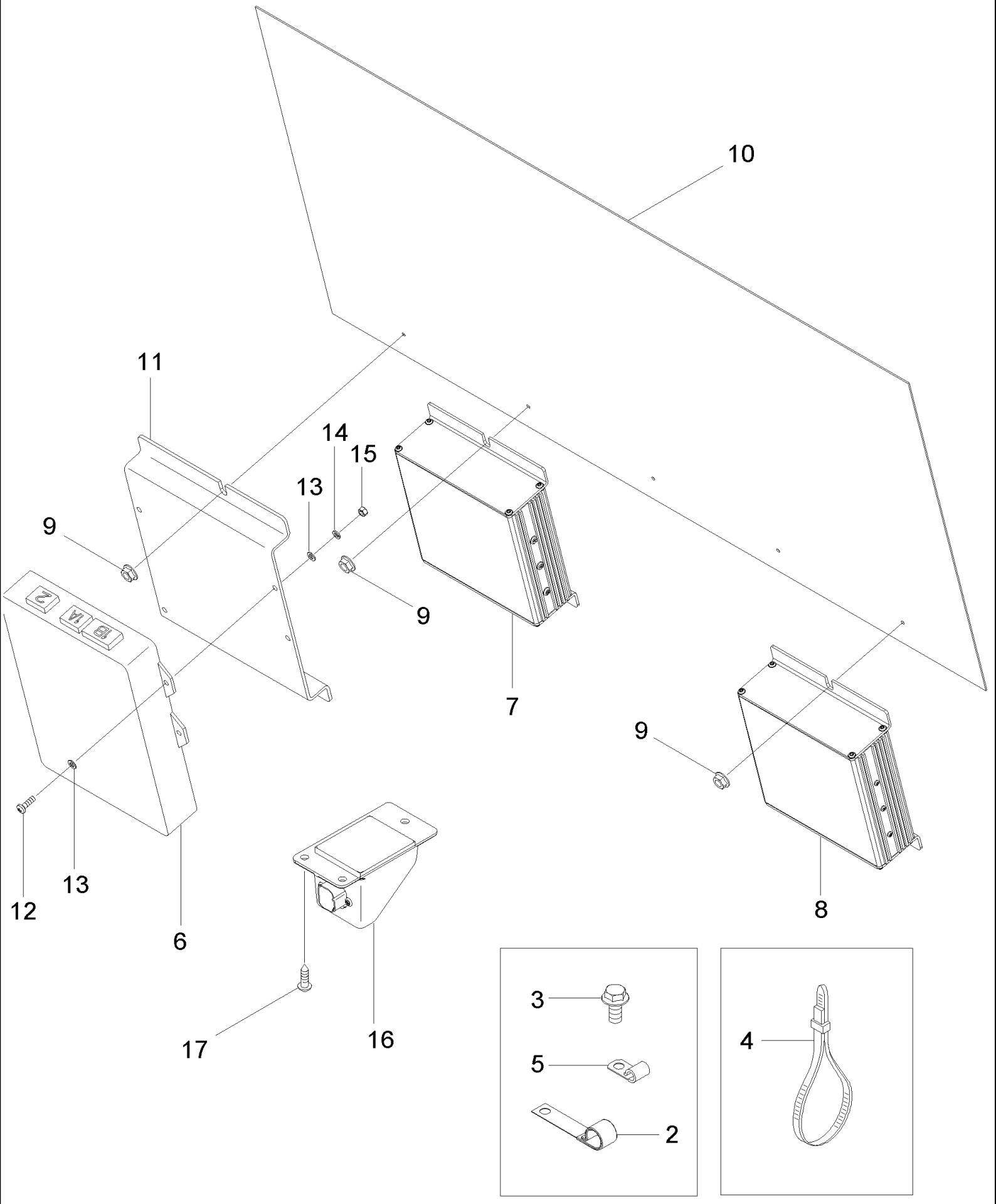

MX285 CASE IH MAGNUM TRACTOR (NORTH AMERICA)

04-05 HARNESS - CHASSIS

ссылка	Номер детали	Кол-во	Описание
1	87406275	1	HARNESS, Chassis, Not Shown, BSN JAZ128365
1	87413894	1	HARNESS, Chassis, Not Shown, BTW JAZ128365 & AJB0305690
1	87441878	1	HARNESS, Chassis, Not Shown, ASN AJB0305690
2	133738A1	2	CLIP,
3	844-12025	1	BOLT, Hex Flg, M12 x 25, 8.8, M12 x 25; 8.8
4	L11541	2	STRAP,
5	516-2395	2	CLAMP, J, 7/16" Insul, 3/8" Bolt, 3/8 ID
6	86985266	1	CONTROL UNIT, Transmission, Without Software
7	407118A2	1	CONTROL UNIT, Hitch, Without Software
8	411976A1	1	CONTROL UNIT, PTO/MFD/Differential Lock, Without Software
9	825-2408	3	NUT, M8 x 1.25, Flg, Cl 8,
10	378802A1	1	COVER,
11	446176A1	1	PLATE,
12	840-1516	4	SCREW, Cross Pan Hd, M5 x 16, M5 x 16
13	895-11005	8	WASHER, M5 x 10 x 1, 5,5 x 10 x 1 mm
14	892-11005	4	WASHER, LOCK, M5, M5
15	824-1405	4	NUT, M5, Cl 5, M5
16	397496A1	1	CONNECTOR, ELEC,
17	780-34319	3	SCREW, SELF TAP, Hex Wash Hd, M4.8 x 19, M4,8 x 19
18	397240A1	1	SENDOR, TEMPERATURE, Transmission (Not Illustrated), See Figure 07-07
19	366867A2	1	HARNESS, Dual Speed PTO Sensor (Not Illustrated)
20	A186004	1	SENSOR, Dual Speed PTO (Not Illustrated), See Figure 06-42
21	169850C2	2	ANCHOR, Harness (Not Illustrated)
22	515-2195	1	CLAMP, 3/8", Insul, 1/4" Bolt, 3/8 ID (Not Illustrated)
23	614-6012	1	BOLT, Hex, M6 x 12, 8.8, M6 x 12; 8.8 (Not Illustrated)
24	829-1406	1	NUT, M6, Cl 10, M6 (Not Illustrated)

MX285 CASE IH MAGNUM TRACTOR (NORTH AMERICA)

04-06 HARNESS - REMOTE HYDRAULIC VALVE

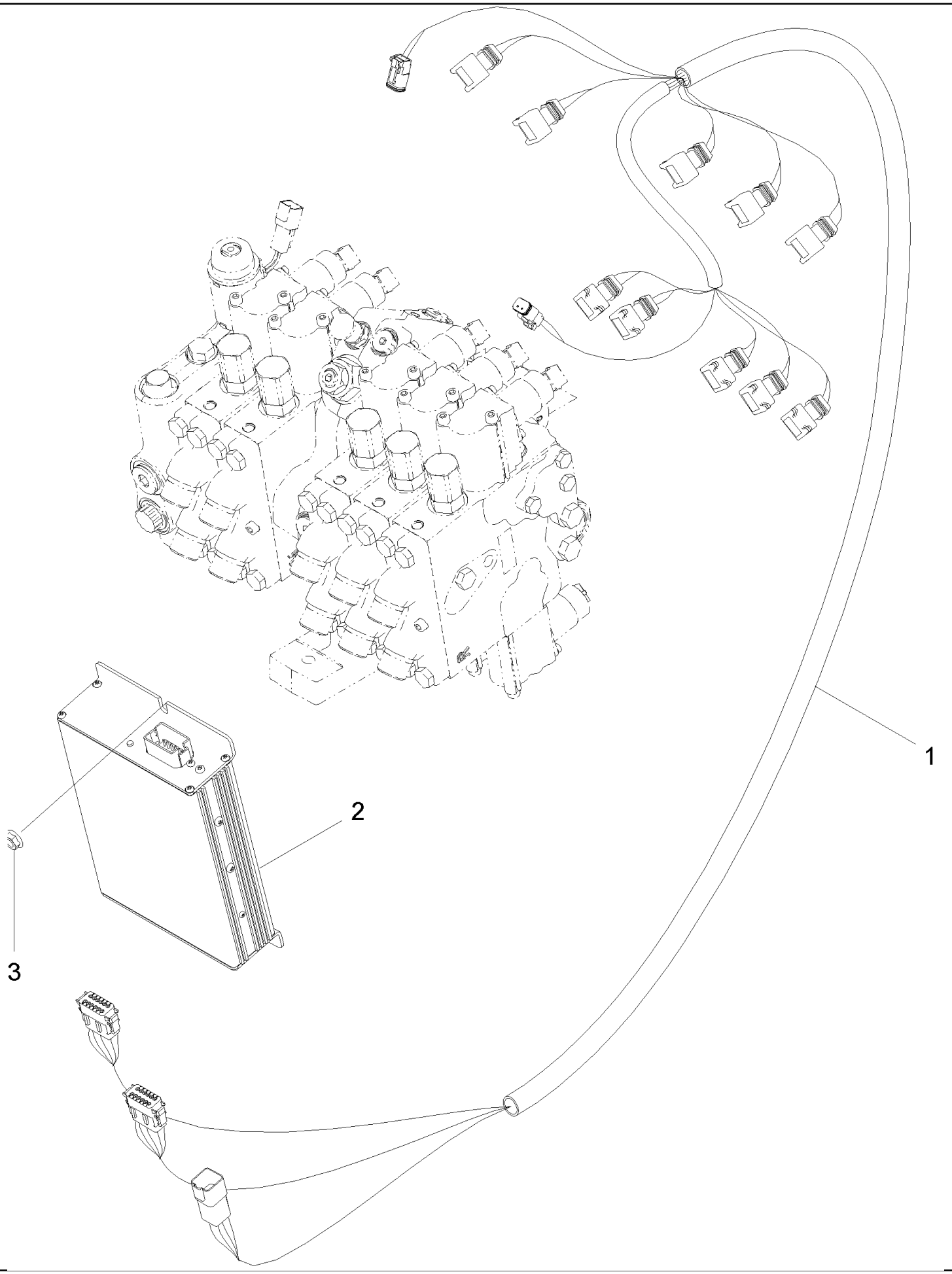

MX285 CASE IH MAGNUM TRACTOR (NORTH AMERICA)

04-06 HARNESS - REMOTE HYDRAULIC VALVE

ссылка	Номер детали	Кол-во	Описание
1	87406276	1	HARNESS, Remote Valve
2	313776A4	1	CONTROL UNIT, Remote Valve
3	825-2408	1	NUT, M8 x 1.25, Flg, Cl 8,

MX285 CASE IH MAGNUM TRACTOR (NORTH AMERICA)

04-07 HARNESS - CAB

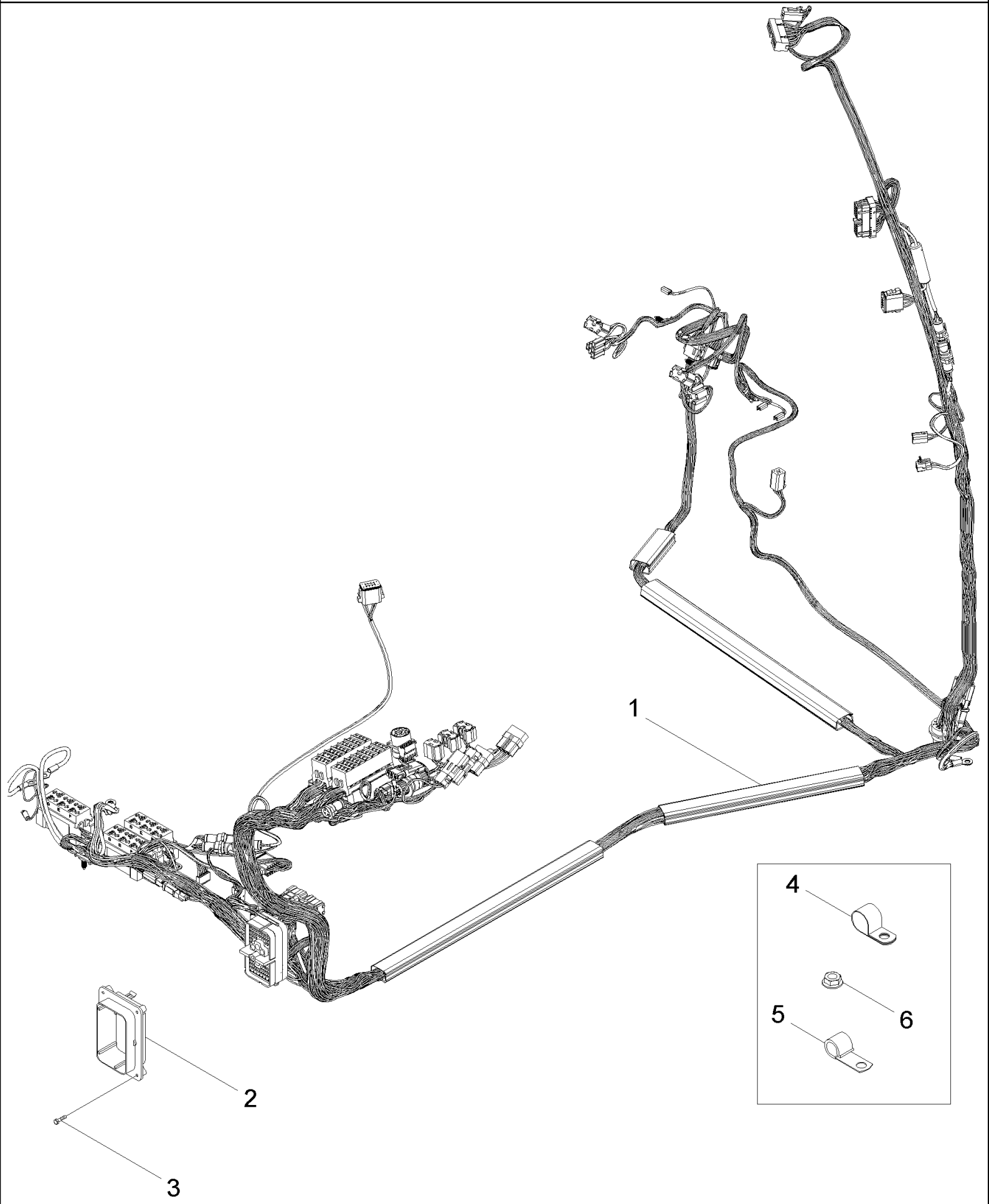

MX285 CASE IH MAGNUM TRACTOR (NORTH AMERICA)

04-07 HARNESS - CAB

ссылка	Номер детали	Кол-во	Описание
1	87403844	1	HARNESS, Cab, BSN JAZ132505
1	87444021	1	HARNESS, Cab, BTW JAZ132505 & JAZ137282
1	87315713	1	HARNESS, Cab, ASN JAZ137282
2	437550A1	1	FLANGE, 102 Pin Connector
3	779-34319	4	SCREW, SELF TAP, Hex Hd, M4.8 x 19, M4,8 x 19 mm
4	515-22190	2	CLAMP, 3/4", Insul, 5/16" Bolt, 3/4 ID
5	516-22127	1	CLAMP, J, 9/16" Insul, 5/16" Bolt, 1/2 ID
6	825-2408	4	NUT, M8 x 1.25, Flg, Cl 8,

MX285 CASE IH MAGNUM TRACTOR (NORTH AMERICA)

04-08 HARNESS - CAB ROOF, SHELF AND CD CHANGER

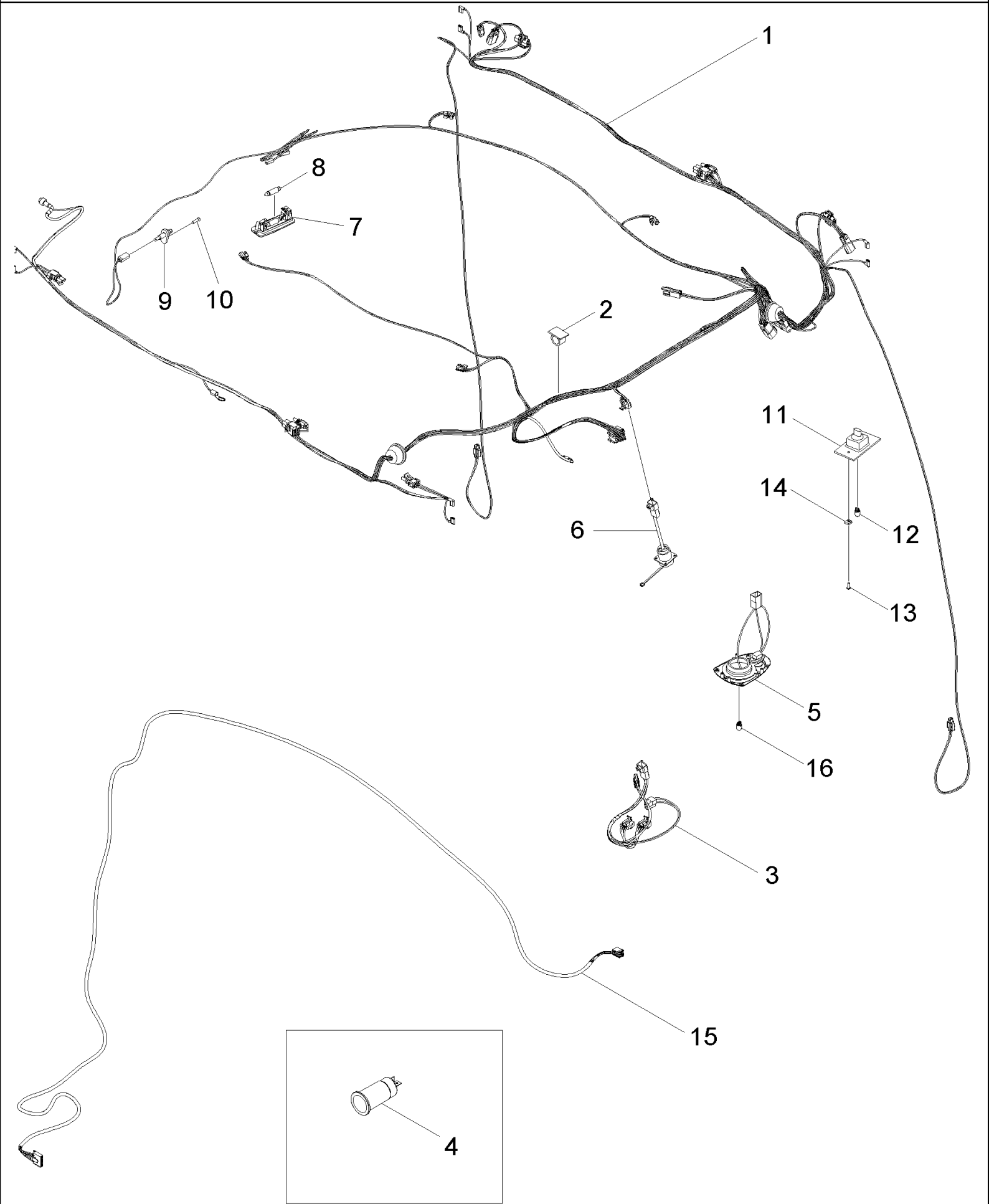

MX285 CASE IH MAGNUM TRACTOR (NORTH AMERICA)

04-08 HARNESS - CAB ROOF, SHELF AND CD CHANGER

ссылка	Номер детали	Кол-во	Описание
1	435210A1	1	HARNESS, Cab Roof
2	169850C2	3	ANCHOR,
3	280584A3	1	HARNESS, Shelf
4	308904A1	1	LIGHTER, CIGARETTE, 12V, Power Outlet
5	372892A1	1	LAMP, Map, Inc. 16
6	227739A2	2	CONNECTOR, ELEC, Harness, Aux Power
7	1983391C1	1	LAMP, Dome, Inc. 8
8	E35556	1	BULB, 12V, 10w
9	1534229C1	1	SWITCH, DOOR, Door
10	765-14322	1	SCREW, SELF TAP, Oval Hd, M4.2 x 22, M4,2 x 22 mm
11	368143A1	1	LAMP, Console Illuminator, Inc. 12
12	D71346	1	LAMP, TAIL, No. 168
13	760-17316	2	SCREW, SELF TAP, Pan Hd, M4.2 x 16, M4,2 x 16
14	177269A1	2	NUT,
15	303433A1	1	HARNESS, CD Changer, If Equipped
16	373114A1	1	BULB,

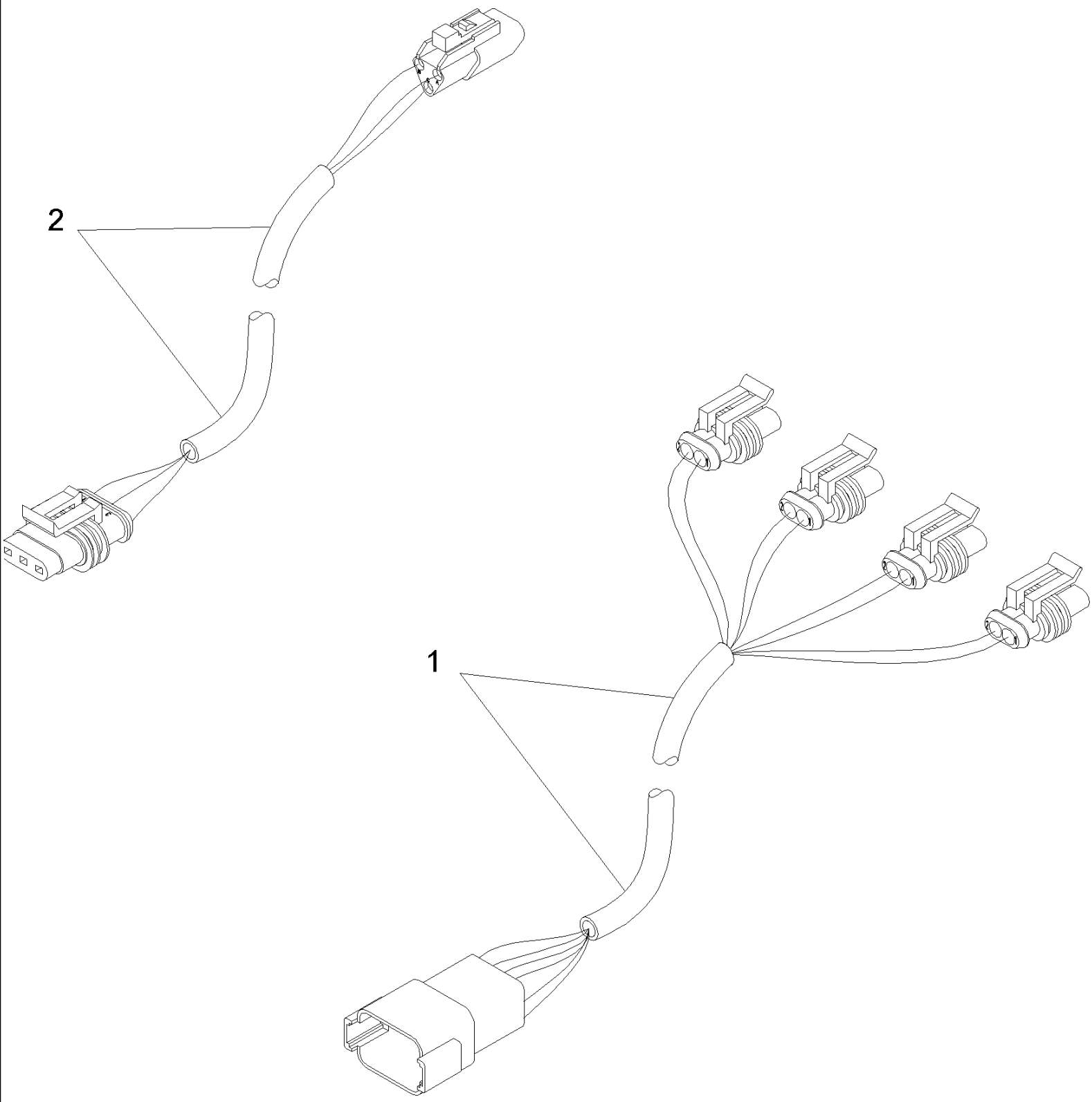
2
1

MX285 CASE IH MAGNUM TRACTOR (NORTH AMERICA)

04-09 HARNESS - SUSPENDED AXLE

ссылка	Номер детали	Кол-во	Описание
1	86984258	1	HARNESS, Suspended Axle Solenoids
2	87408291	1	HARNESS, Suspended Axle Sensor

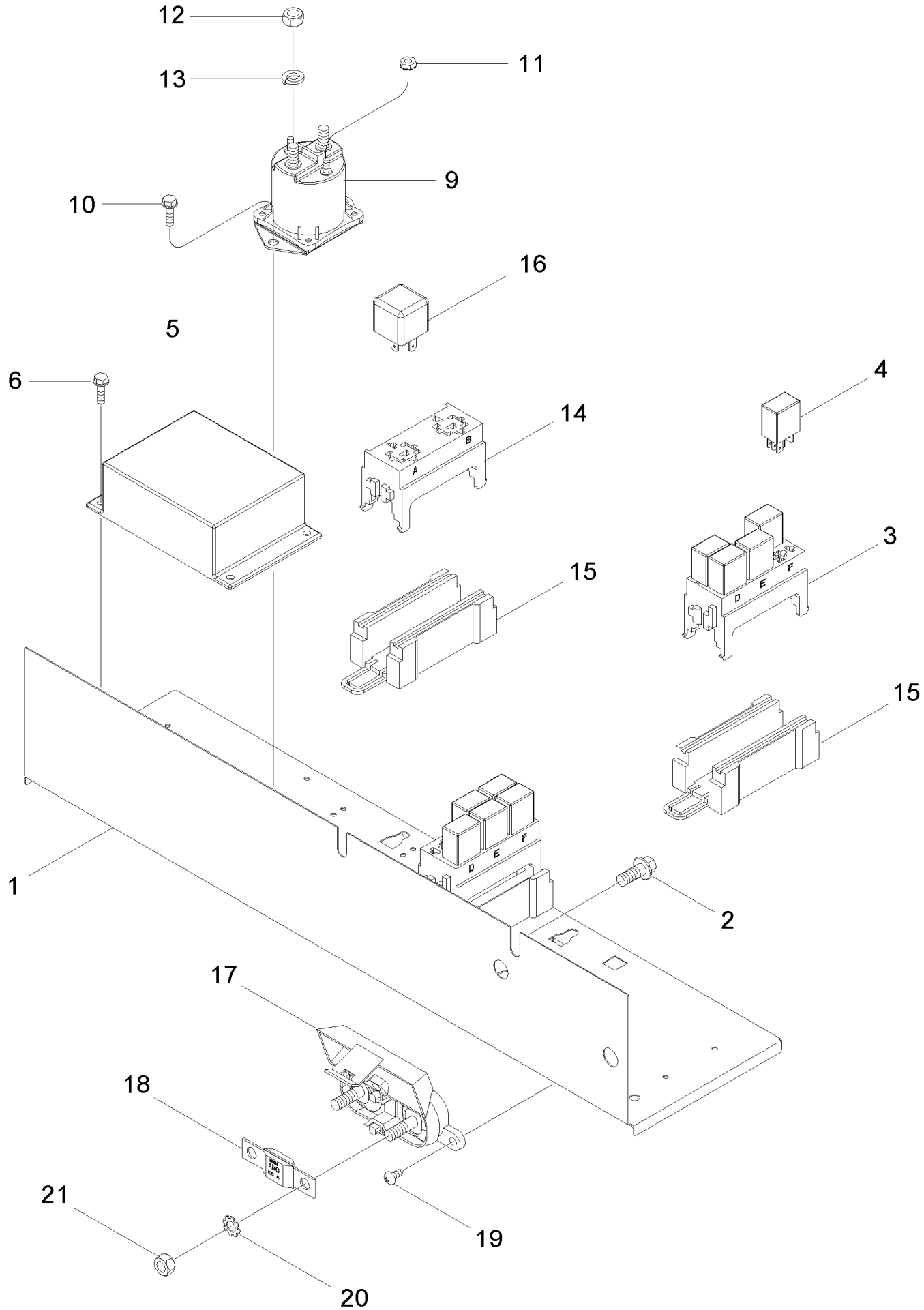
12
13
11
9
10
16
5
6
4
14
A
B
3
15
D
E
F
15
1
2
17
18
19
21
20

MX285 CASE IH MAGNUM TRACTOR (NORTH AMERICA)

04-10 ELECTRICAL COMPONENT MOUNTING

сылка	Номер детали	Кол-во	Описание
1	399428A5	1	PANEL,
2	781-24820	3	SCREW, SELF TAP, Hex Flg Hd, M8 x 20, M8 x 20
3	144417A1	2	BLOCK, CONNECTING,
4	105849A1	10	RELAY, 20 Amp
5	397346A1	1	FLASHER UNIT, Flasher
6	780-34319	2	SCREW, SELF TAP, Hex Wash Hd, M4.8 x 19, M4,8 x 19
9	418485A1	1	SOLENOID,
10	780-34319	2	SCREW, SELF TAP, Hex Wash Hd, M4.8 x 19, M4,8 x 19
11	193-1000	2	NUT, Keps, w/LW,#10-32, No. 10 NF
12	425-105	2	NUT, 5/16"-18, G5, 5/16
13	492-11031	2	WASHER, LOCK, 5/16",
14	NSS	1	NOT SERVICED SEPARATELY, Block, Relay
15	182163A1	2	CONNECTOR, ELEC,
16	1983394C2	1	RELAY,
17	440038A1	1	JUNCTION,
18	440572A1	1	FUSE, 100 Amp
19	760-14413	2	SCREW, SELF TAP, Pan Hd, M4.8 x 13, 4,8 x 13 mm
20	893-11008	2	WASHER, LOCK, Ext Tooth, M8, M8
21	829-1408	2	NUT, M8, Cl 10, M8; 10

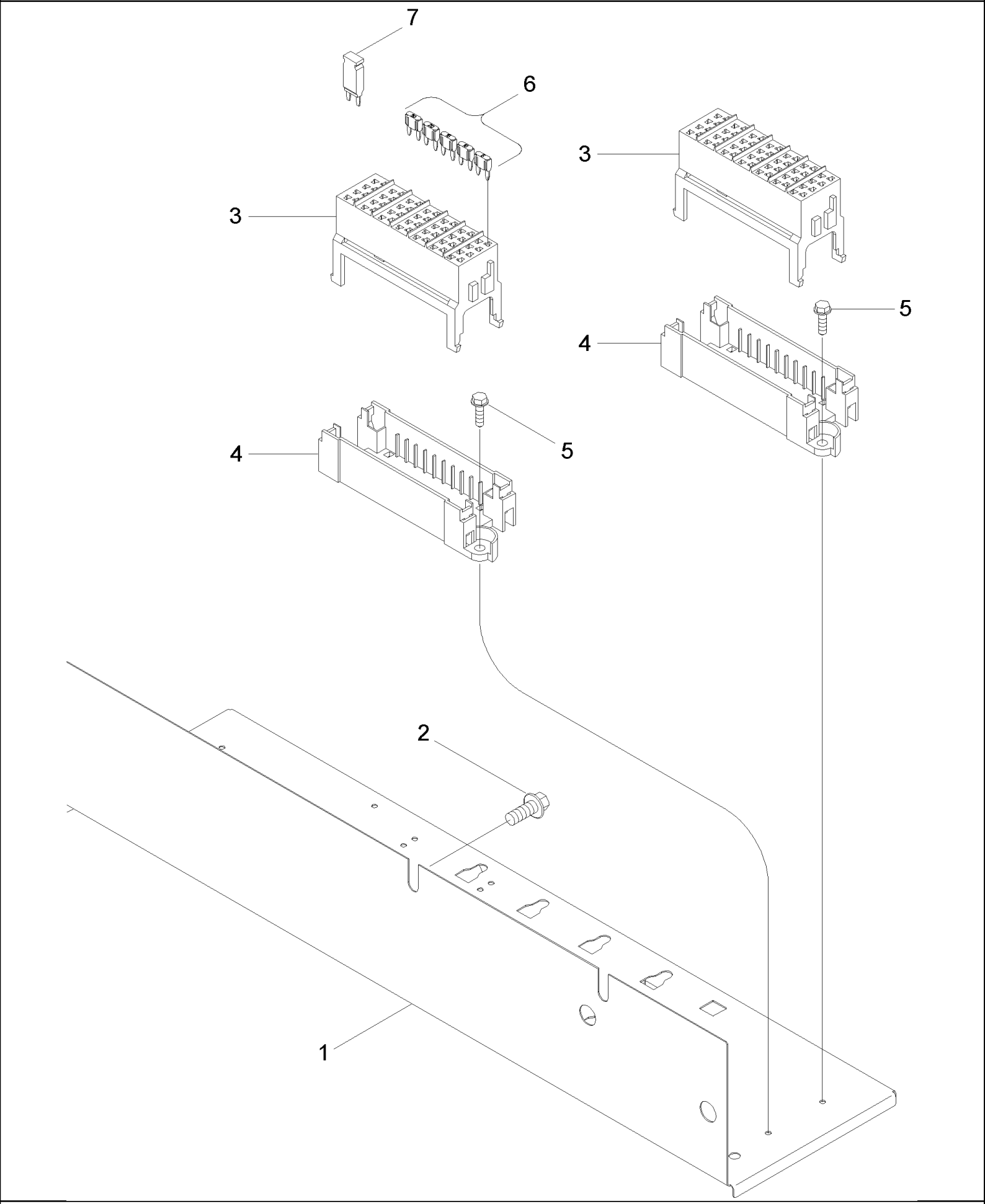
7
6
3
3
5
4
4
5
2
1

MX285 CASE IH MAGNUM TRACTOR (NORTH AMERICA)

04-11 ELECTRICAL COMPONENT MOUNTING - FUSES

сылка	Номер детали	Кол-во	Описание
1	399428A5	1	PANEL,
2	781-24820	3	SCREW, SELF TAP, Hex Flg Hd, M8 x 20, M8 x 20
3	144421A1	2	BLOCK, CONNECTING,
4	194319A1	2	BASE,
5	780-34319	2	SCREW, SELF TAP, Hex Wash Hd, M4.8 x 19, M4,8 x 19
6	121410A1	AR	FUSE, 5 Amp
6	121412A1	AR	FUSE, 10 Amp
6	121413A1	AR	FUSE, 15 Amp
6	121414A1	AR	FUSE, 20 Amp
6	121416A1	AR	FUSE, 30 Amp
7	139719A1	1	CIRCUIT BREAKER, 15 Amp

MX285 CASE IH MAGNUM TRACTOR (NORTH AMERICA)

04-12 A-POST COVER - INSTRUMENT CLUSTER, BSN JAZ137282

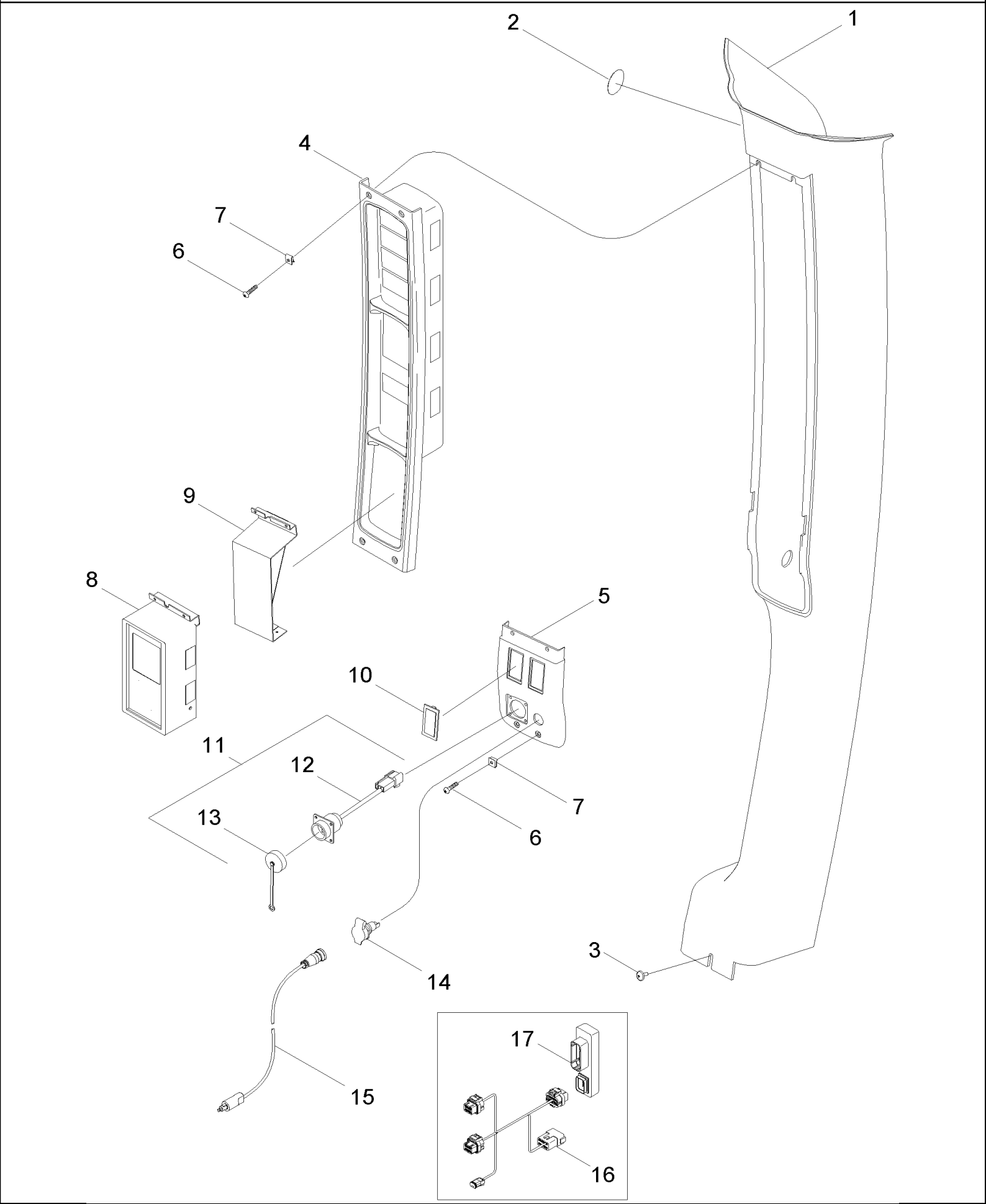

MX285 CASE IH MAGNUM TRACTOR (NORTH AMERICA)

04-12 A-POST COVER - INSTRUMENT CLUSTER, BSN JAZ137282

ссылка	Номер детали	Кол-во	Описание
1	444547A1	1	TRIM PANEL,
2	376597A2	2	COVER,
3	1975782C1	1	SCREW, SELF TAP, Cross Truss Wash Hd, #10 x 5/8",
4	86989494	1	CLUSTER, INSTRUMENT, Without Software
5	358804A1	1	BEZEL,
6	260-16516	6	SCREW, SELF TAP, Cross Pan Hd, #10 x 1", No. 10 x 1
7	177269A1	7	NUT,
8	86990264	1	MODULE, Performance, Without Software
9	358296A1	1	PANEL, Blanking
10	245918C1	2	CAP, Blanking
11	227739A2	1	CONNECTOR, ELEC, Auxiliary Power, Inc. 12, 13
12	225164C1	1	CONNECTOR, ELEC,
13	225162C1	1	PLUG, Dust
14	300655A1	1	SOCKET, POWER,
15	324847A2	1	HARNESS, Monitor
16	87314407	1	HARNESS, WIRE, , Required For Conversion To Instrument Cluster Used ASN JAZ137282
17	87314358	1	ADAPTER, , Required For Conversion To Instrument Cluster Used ASN JAZ137282

MX285 CASE IH MAGNUM TRACTOR (NORTH AMERICA)

04-12A A-POST COVER - INSTRUMENT CLUSTER, ASN JAZ137282

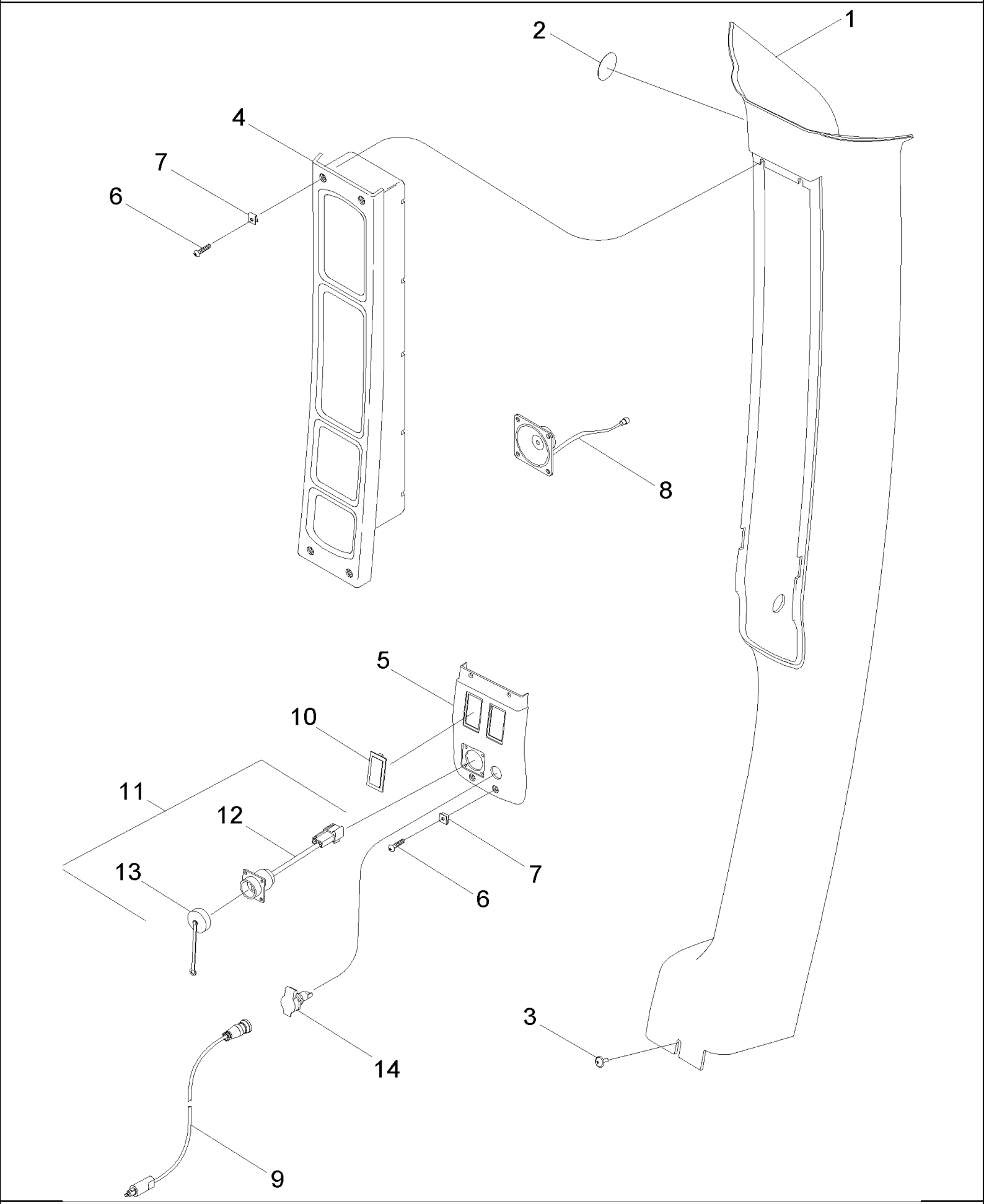

MX285 CASE IH MAGNUM TRACTOR (NORTH AMERICA)

04-12A A-POST COVER - INSTRUMENT CLUSTER, ASN JAZ137282

сылка	Номер детали	Кол-во	Описание
1	444547A1	1	TRIM PANEL,
2	376597A2	2	COVER,
3	1975782C1	1	SCREW, SELF TAP, Cross Truss Wash Hd, #10 x 5/8",
4	87350682	1	MODULE, Standard, Without Software, Inc. REF 8
4	87350683	1	MODULE, Deluxe, Without Software, Inc. REF 8
5	358804A1	1	BEZEL,
6	260-16516	6	SCREW, SELF TAP, Cross Pan Hd, #10 x 1", No. 10 x 1
7	177269A1	7	NUT,
8	87335023	1	SPEAKER,
9	324847A2	1	HARNESS, Monitor
10	245918C1	2	CAP, Blanking
11	227739A2	1	CONNECTOR, ELEC, Auxiliary Power, Inc. 12, 13
12	225164C1	1	CONNECTOR, ELEC,
13	225162C1	1	PLUG, Dust
14	300655A1	1	SOCKET, POWER,

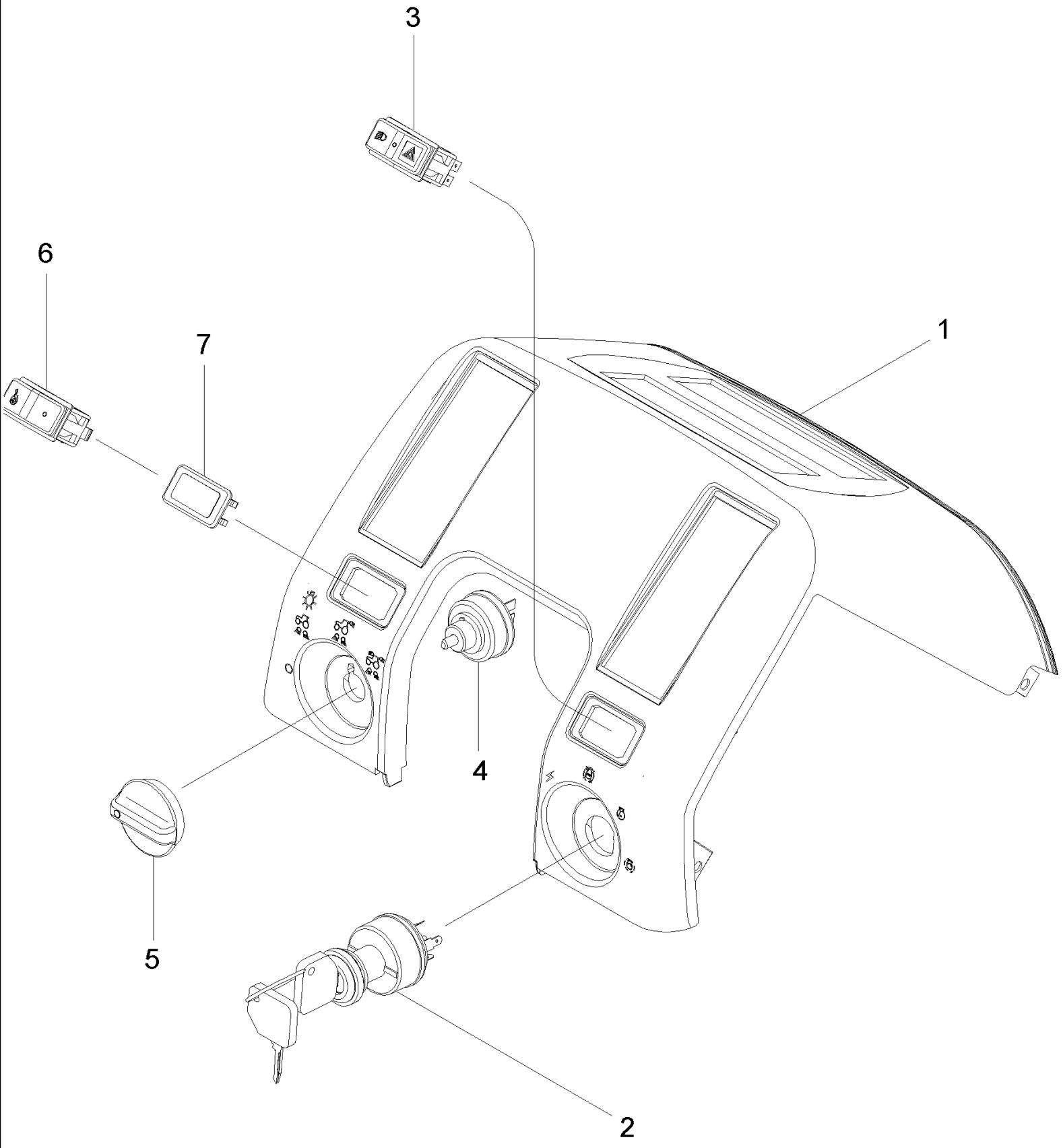
3
6
7
1
4
5
2

MX285 CASE IH MAGNUM TRACTOR (NORTH AMERICA)

04-13 CONTROLS - FRONT CONSOLE

ссылка	Номер детали	Кол-во	Описание
1	358672A1	1	COVER,
2	427182A1	1	SWITCH, With Key
3	86989942	1	SWITCH, LIGHTS, Head Lights
4	177250A1	1	SWITCH, LIGHTS, Work Lights
5	1331046C2	1	CAP, WASHER,
6	86989943	1	SWITCH, Ether
7	86000535	1	PLUG, 1.427" x .62", Plastic,
8	1964831C2	1	SET OF 2 KEYS, (Not Shown)

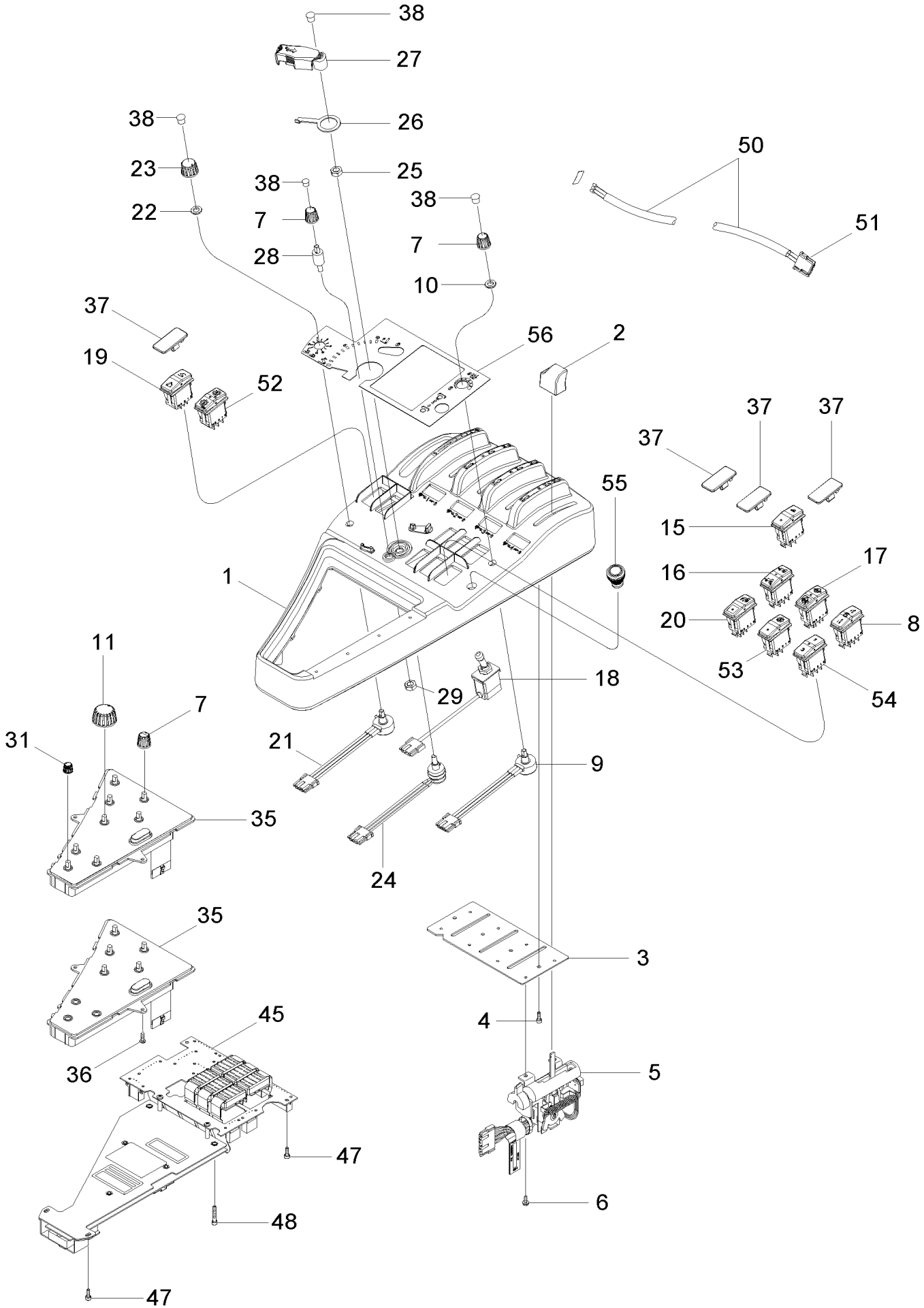
38
27
38
26
23
25
38
38
22
7
7
28
10
50
51
37
56
2
19
52
37
37
37
55
15
1
16
17
20
8
53
54
11
18
29
7
31
21
9
35
24
35
3
45
4
36
5
47
48
6
47

MX285 CASE IH MAGNUM TRACTOR (NORTH AMERICA)

04-14 CONTROLS - RIGHT HAND CONSOLE

ссылка	Номер детали	Кол-во	Описание
1	REF	1	INSTRUCTION, Cover Assembly, See Figure 09-34
2	406962A1	AR	KNOB,
3	230098A1	1	PLATE,
4	368048A1	4	SCREW, M4 x 12
5	87395299	AR	VALVE, CONTROL, Remote Hydraulics
6	281-3446	AR	SCREW, SELF TAP, Hex Wash Hd, #8 x 3/8", No. 8 NC x 3/8 in
7	276797A1	AR	KNOB,
8	86989947	1	SWITCH, 5th Remote
9	256305A2	1	POTENTIOMETER, Flow Control, 5th Remote, Inc. 10
10	A39888	2	NUT, 3/8-32
11	187820A1	1	BUTTON,
15	86989950	1	SWITCH, Creep Speed
16	86989948	1	SWITCH, MFD
17	86989963	1	SWITCH, Differential Lock
18	409603A2	1	SWITCH, PTO
19	86990406	1	SWITCH, Hitch Control
20	86989960	1	SWITCH, Slip Limit Control
21	256305A2	1	POTENTIOMETER, Draft Control, Inc. 22
22	A39888	1	NUT, 3/8-32
23	314601A1	1	BUTTON,
24	256304A2	1	POTENTIOMETER, Hitch Position
25	192231A1	1	NUT, 1/4 in
26	248087A1	1	LEVER,
27	411821A3	1	LEVER ASSY.,
28	256303A1	1	STUD,
29	829-1406	1	NUT, M6, Cl 10, M6; 10.9
31	223433A1	3	KNOB,
35	232869A5	1	PANEL, With Hitch
35	238290A4	1	PANEL, Without Hitch
35	87443735	1	PANEL, With End-of-Row System
36	760-14316	2	SCREW, SELF TAP, Pan Hd, M4.2 x 16, M4,2 x 16
37	406324A2	AR	PLUG,
38	353-402	AR	PLUG, Dome, .375" hole, Nylon, 3/8
38	353-401	AR	PLUG, Dome, .312" hole, Nylon, 5/16
45	86990793	1	UNIT, Without Software
45	87454949	1	UNIT, Without Software, With End-of-Row System
47	864-4012	4	SCREW, Hex Soc Hd, M4 x 12, 8.8, M4 x 12
48	864-4025	2	SCREW, Hex Soc Hd, M4 x 25, 8.8, M4 x 25; 8,8
50	258010A2	1	SWITCH, Transmission Shift
51	235676A1	1	CONNECTOR,
52	86989945	1	SWITCH, Programmable Shift
52	87422017	1	SWITCH, End-of-Row Step/Pause, With End-of-Row System
53	86989949	1	SWITCH, Autoshift
54	86989951	1	SWITCH, Scraper
55	411705A3	1	KNOB, PTO Switch

ссылка	Номер детали	Кол-во	Описание
56	406315A2	1	DECAL,

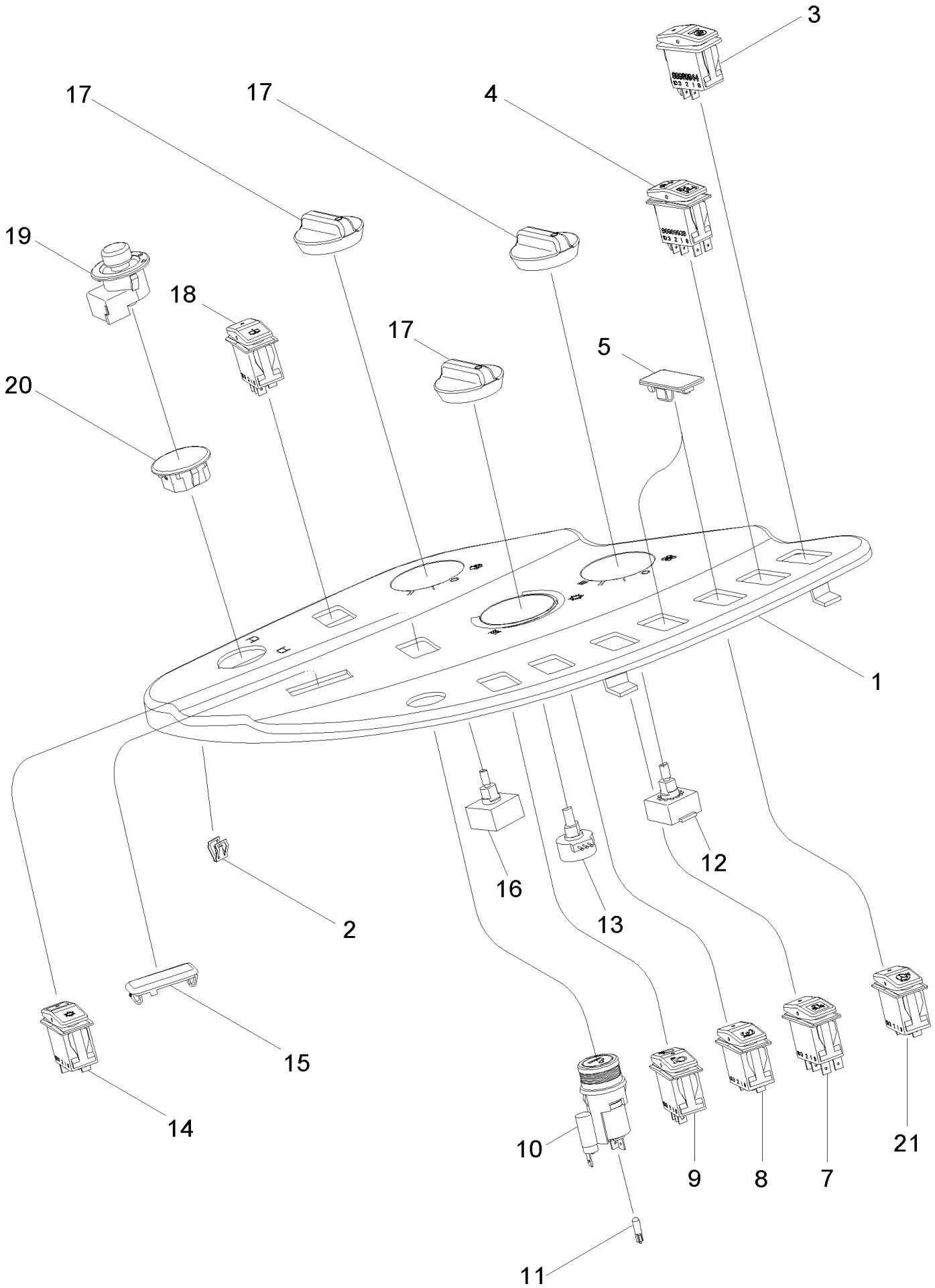
3
17
17
4
19
18
17
5
20
1
16
12
2
13
15
14
10
9
8
7
21
11

MX285 CASE IH MAGNUM TRACTOR (NORTH AMERICA)

04-15 CONTROLS - RIGHT FENDER CONSOLE, WITHOUT ATC

ссылка	Номер детали	Кол-во	Описание
1	409304A2	1	PANEL,
2	278316A2	2	CLIP,
3	86989944	1	SWITCH, Ride Control, Standard
3	86989964	1	SWITCH, Ride Control, Pickup Hitch, Latch
4	86989938	1	SWITCH, Suspended Axle
5	406324A2	AR	PLUG,
7	86989941	1	SWITCH, LIGHTS, Becon/Strobe Light
8	86989955	1	SWITCH, Cruise Control, On/Off
9	86989953	1	SWITCH, Cruise Control, Increase/Decrease
10	432239A1	1	LIGHTER, CIGARETTE, Inc. 11
10	82022823	1	PLATE, Rubber Plug, Without Lighter (Not Shown)
11	437324A1	1	BULB,
12	92100C2	1	SWITCH, Blower Motor
13	326282A1	1	POTENTIOMETER, Cab Temperature
14	87405636	1	SWITCH, Air Conditioning, On/Off
15	302118A1	1	COVER,
16	92115C2	1	SWITCH, Front Wiper
17	1331046C2	3	CAP, WASHER,
18	86989939	1	SWITCH, WINDSHIELD WIPER, Rear Wiper
19	280627A1	1	SWITCH, Mirror
20	280628A1	1	PLUG,
21	87422015	1	SWITCH, Accuguide

MX285 CASE IH MAGNUM TRACTOR (NORTH AMERICA)

04-16 CONTROLS - RIGHT FENDER CONSOLE, WITH ATC

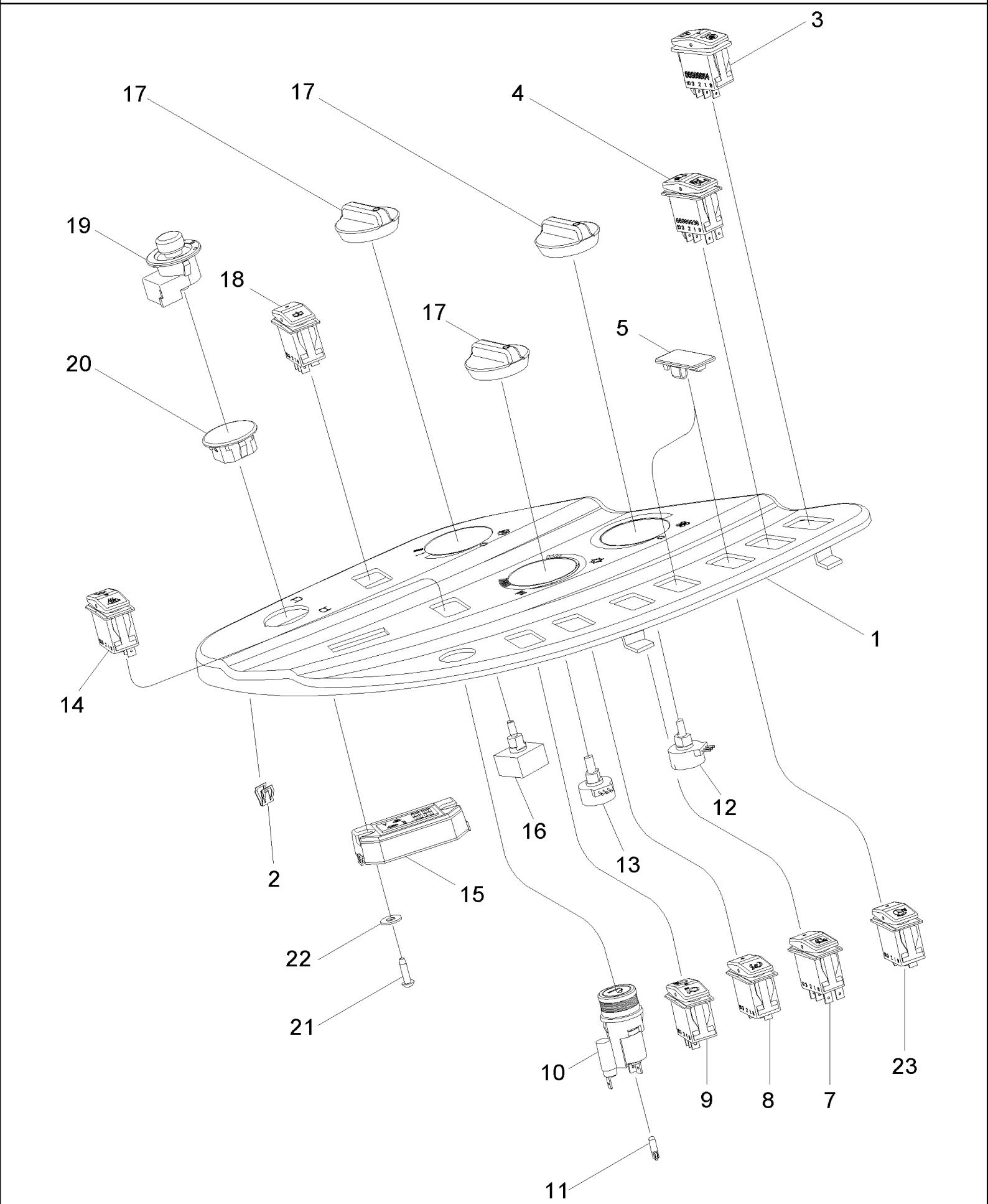

MX285 CASE IH MAGNUM TRACTOR (NORTH AMERICA)

04-16 CONTROLS - RIGHT FENDER CONSOLE, WITH ATC

сылка	Номер детали	Кол-во	Описание
1	405010A2	1	PANEL,
2	278316A2	2	CLIP,
3	86989944	1	SWITCH, Ride Control, Standard
3	86989964	1	SWITCH, Ride Control, Pickup Hitch, Latch
4	86989938	1	SWITCH, Suspended Axle
5	406324A2	AR	PLUG,
7	86989941	1	SWITCH, LIGHTS, Becon/Strobe Light
8	86989955	1	SWITCH, Cruise Control, On/Off
9	86989953	1	SWITCH, Cruise Control, Increase/Decrease
10	432239A1	1	LIGHTER, CIGARETTE, Inc. 11
10	82022823	1	PLATE, Rubber Plug, Without Lighter (Not Shown)
11	437324A1	1	BULB,
12	326281A1	11	POTENTIOMETER, Blower Motor
13	326282A1	1	POTENTIOMETER, Cab Temperature
14	86989940	1	SWITCH, Climate Control
15	308910A2	1	DISPLAY MATERIAL,
16	92115C2	1	SWITCH, Front Wiper
17	1331046C2	3	CAP, WASHER,
18	86989939	1	SWITCH, WINDSHIELD WIPER, Rear Wiper
19	280627A1	1	SWITCH, Mirror
20	280628A1	1	PLUG,
21	261-14512	2	SCREW, SELF TAP, Cross Pan Hd, #10 x 3/4", No. 10 st x 3/4
22	495-31027	2	WASHER, 1/4", 17/64 x 5/8 x 3/64
23	87422015	1	SWITCH, Accuguide

MX285 CASE IH MAGNUM TRACTOR (NORTH AMERICA)

04-17 ALTERNATOR - MOUNTING, BSN JAZ135316

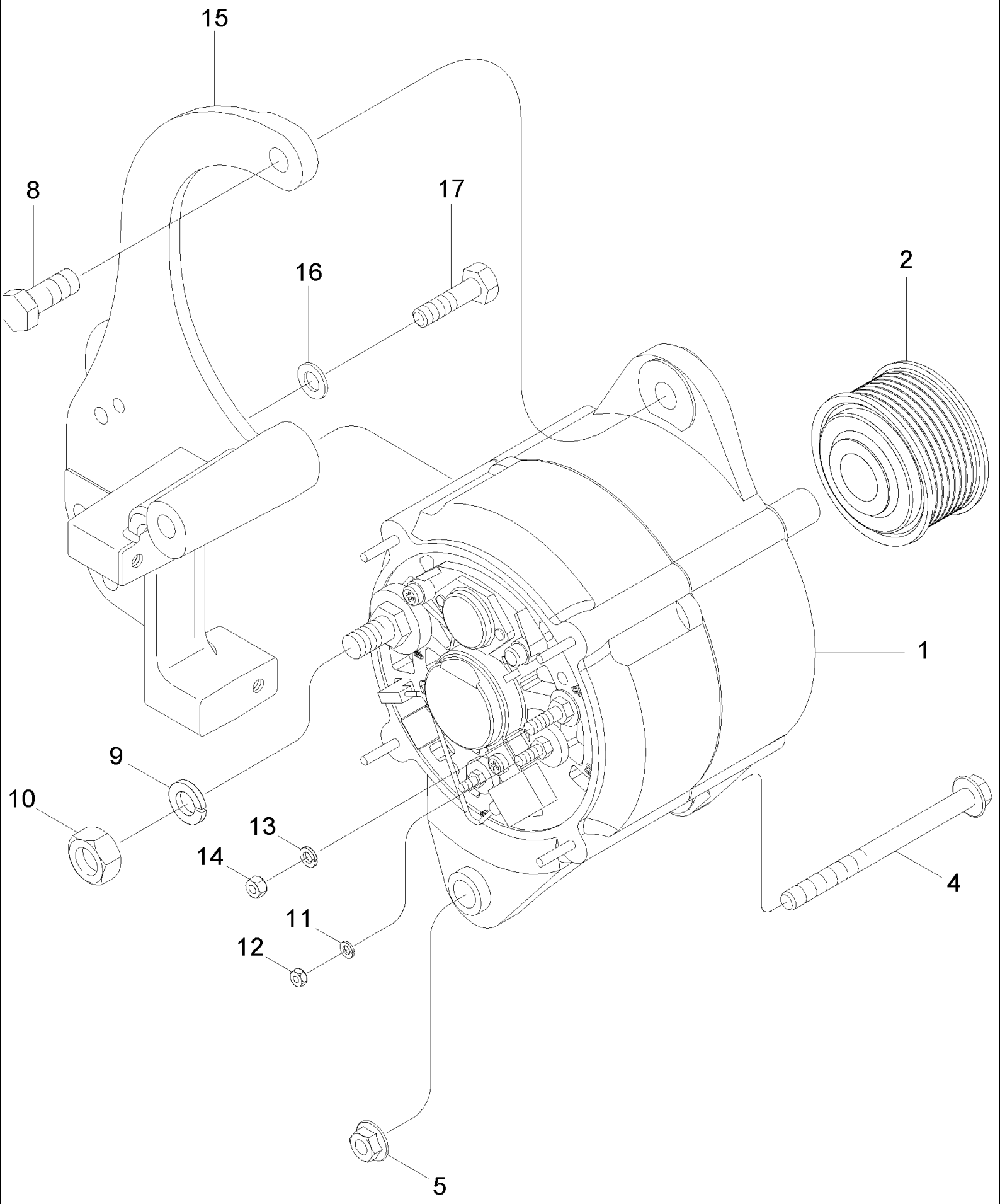

MX285 CASE IH MAGNUM TRACTOR (NORTH AMERICA)

04-17 ALTERNATOR - MOUNTING, BSN JAZ135316

ссылка	Номер детали	Кол-во	Описание
1	125849A1	1	ALTERNATOR, 135 amp, See Figure 04-18
2	86975356	1	PULLEY,
4	844-12150	1	BOLT, Hex Flg, M12 x 150, 8.8, M12 x 150; 8.8
5	9804279	1	NUT, M12 x 1.75, Flg, Cl 8,
8	426-820	1	BOLT, Hex, 1/2"-13 x 1 1/4", G8, Full Thd, 1/2 x 1-1/4; 8
9	492-11044	1	WASHER, LOCK, 7/16", 7/16"
10	425-147	1	NUT, Jam, 7/16"-14, G5, 7/16
11	892-11004	1	WASHER, LOCK, M4, M4
12	825-1404	1	NUT, M4, Cl 8,
13	892-11005	1	WASHER, LOCK, M5, M5
14	824-1405	1	NUT, M5, Cl 5, M5; 5
15	394717A4	1	SUPPORT,
16	895-11010	3	WASHER, M10 x 20 x 2, 11 x 20 x 2 mm
17	628-10030	3	BOLT, Hex, M10 x 30, 10.9, Full Thd, M10 x 30; 10.9

04-17A ALTERNATOR - MOUNTING, ASN JAZ135316

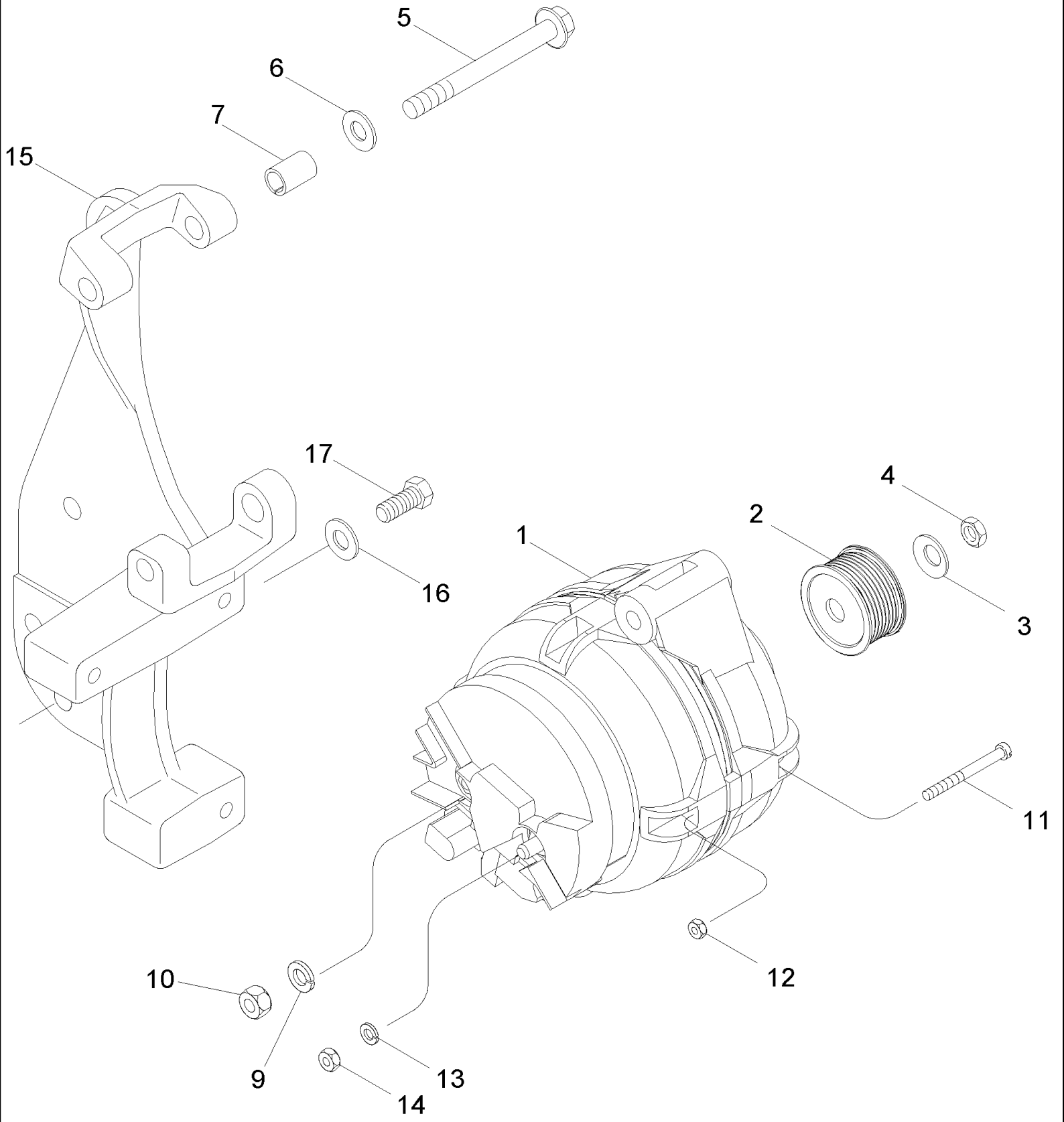

MX285 CASE IH MAGNUM TRACTOR (NORTH AMERICA)

04-17A ALTERNATOR - MOUNTING, ASN JAZ135316

ссылка	Номер детали	Кол-во	Описание
1	87452821	1	ALTERNATOR, 150 amp
2	87451504	1	PULLEY,
3	87456421	1	WASHER, SPRING,
4	87456420	1	NUT, M16
5	814-10100	2	BOLT, Hex, M10 x 100, 8.8, M10 x 100; 8.8
6	895-11010	2	WASHER, M10 x 20 x 2, Flat, 11 x 21 x 2 mm
7	87417776	2	BUSHING, Alternator Mounting
9	892-11008	1	WASHER, LOCK, M8, M8
10	829-1408	1	NUT, M8, Cl 10, M8
11	614-5045	3	BOLT, Hex, M5 x 45, 8.8, Full Thd, M5 x 45
12	825-2405	3	NUT, M5 x .8, Flg, Cl 8, M5
13	892-11005	1	WASHER, LOCK, M5, M5
14	824-1405	1	NUT, M5, Cl 5, M5; 5
15	87433300	1	SUPPORT, Alternator
16	895-11010	3	WASHER, M10 x 20 x 2, 11 x 20 x 2 mm
17	628-10030	3	BOLT, Hex, M10 x 30, 10.9, Full Thd, M10 x 30; 10.9

04-18 ALTERNATOR ASSEMBLY - 135 AMPERE, BSN JAZ135316

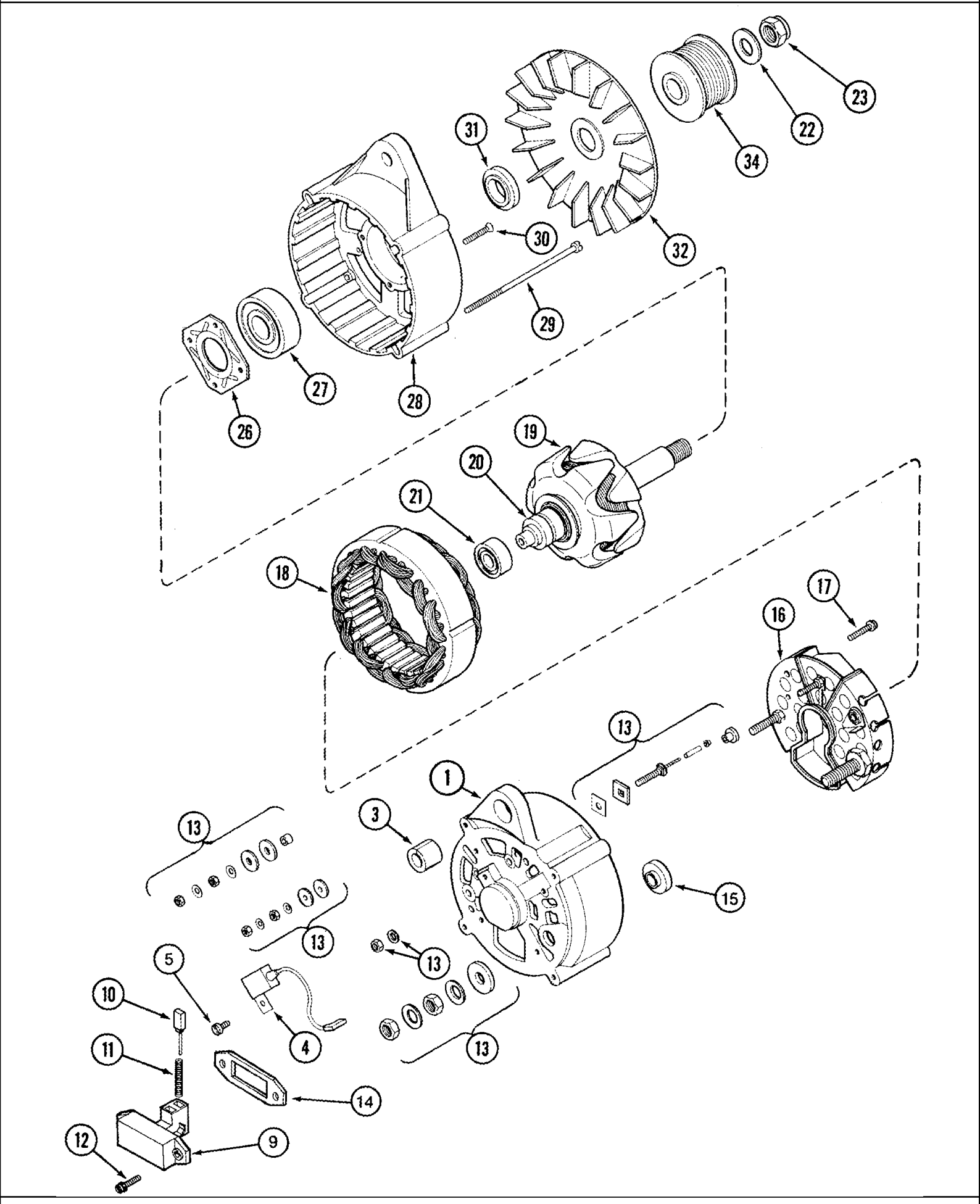

MX285 CASE IH MAGNUM TRACTOR (NORTH AMERICA)

04-18 ALTERNATOR ASSEMBLY - 135 AMPERE, BSN JAZ135316

ссылка	Номер детали	Кол-во	Описание
	125849A1R	1	REMAN-ALTERNATOR, Remanufactured, N.A. Only
	125849A1C	1	CORE-ALTERNATOR,
	125849A1	1	ALTERNATOR, 135 amp, Inc. 1 - 32
1	1964731C1	1	HOUSING,
3	1964737C1	1	BUSHING,
4	3079389R1	1	CAPACITOR,
5	840-1510	1	SCREW, Cross Pan Hd, M5 x 10, M5 x 10
9	1964733C1	1	REGULATOR,
10	1964968C1	1	BRUSH,
11	1964734C1	2	SPRING,
12	A187504	2	SCREW,
13	1964738C1	1	PACKAGE,
14	140546A1	1	GASKET,
15	140545A1	1	BUSHING,
16	1964732C1	1	RECTIFIER,
17	A186194	2	SCREW, Sltd Truss Hd, M4 x 18, w/LW,
18	140548A1	1	STATOR,
19	1964728C1	1	ROTOR,
20	140543A1	1	RING,
21	1964730C1	1	BEARING, BALL,
22	495-21063	1	WASHER, 9/16", 5/8 x 1-15/32 x 7/64
23	131-56	1	NUT, LOCK, 5/8"-18, GB, 5/8 NF
26	1964727C1	1	PLATE,
27	1964726C1	1	BEARING, BALL,
28	1964725C1	1	HOUSING,
29	140549A1	4	SCREW,
30	140541A1	4	SCREW,
31	1964729C1	1	SPACER,
32	1964736C1	1	FAN,
34	86975356	1	PULLEY,

MX285 CASE IH MAGNUM TRACTOR (NORTH AMERICA)

04-19 STARTER - MOUNTING

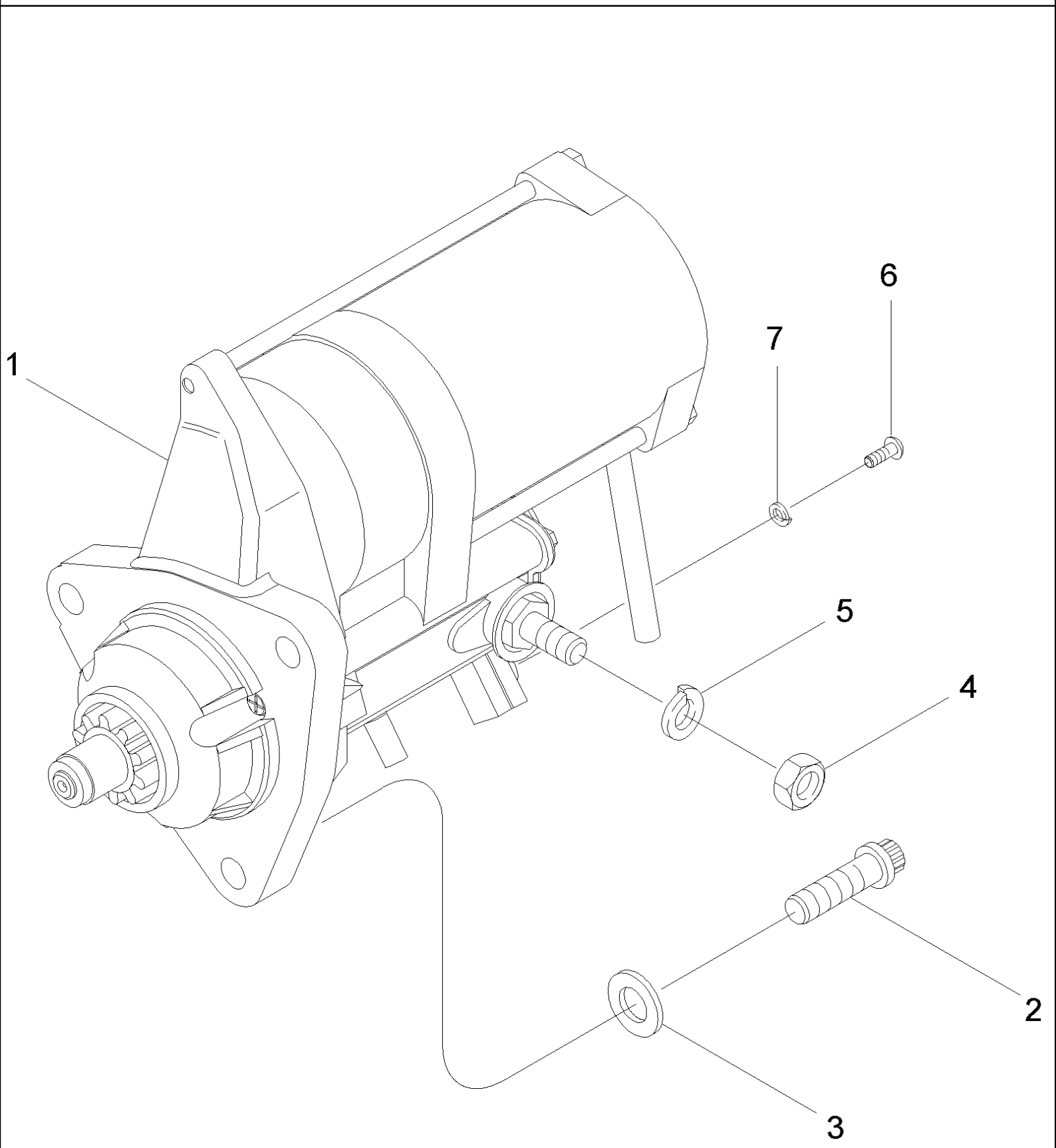

MX285 CASE IH MAGNUM TRACTOR (NORTH AMERICA)

04-19 STARTER - MOUNTING

ссылка	Номер детали	Кол-во	Описание
1	193432A2	1	MOTOR, , See Figure 04-20
2	868-12040	3	SCREW, 12 pt, Flg Hd, M12 x 40, 12.9, 12 Point, M12 x 40; 12.9
3	896-11012	3	WASHER, M13.5 x 24.5 x 3, HT, 13.5 x 24 x 3 mm
4	829-1412	1	NUT, M12, Cl 10, M12; 10
5	892-11012	1	WASHER, LOCK, M12, M12
6	258820A1	1	SCREW, M5 x 8
7	892-11005	1	WASHER, LOCK, M5, M5

04-20 STARTER ASSEMBLY

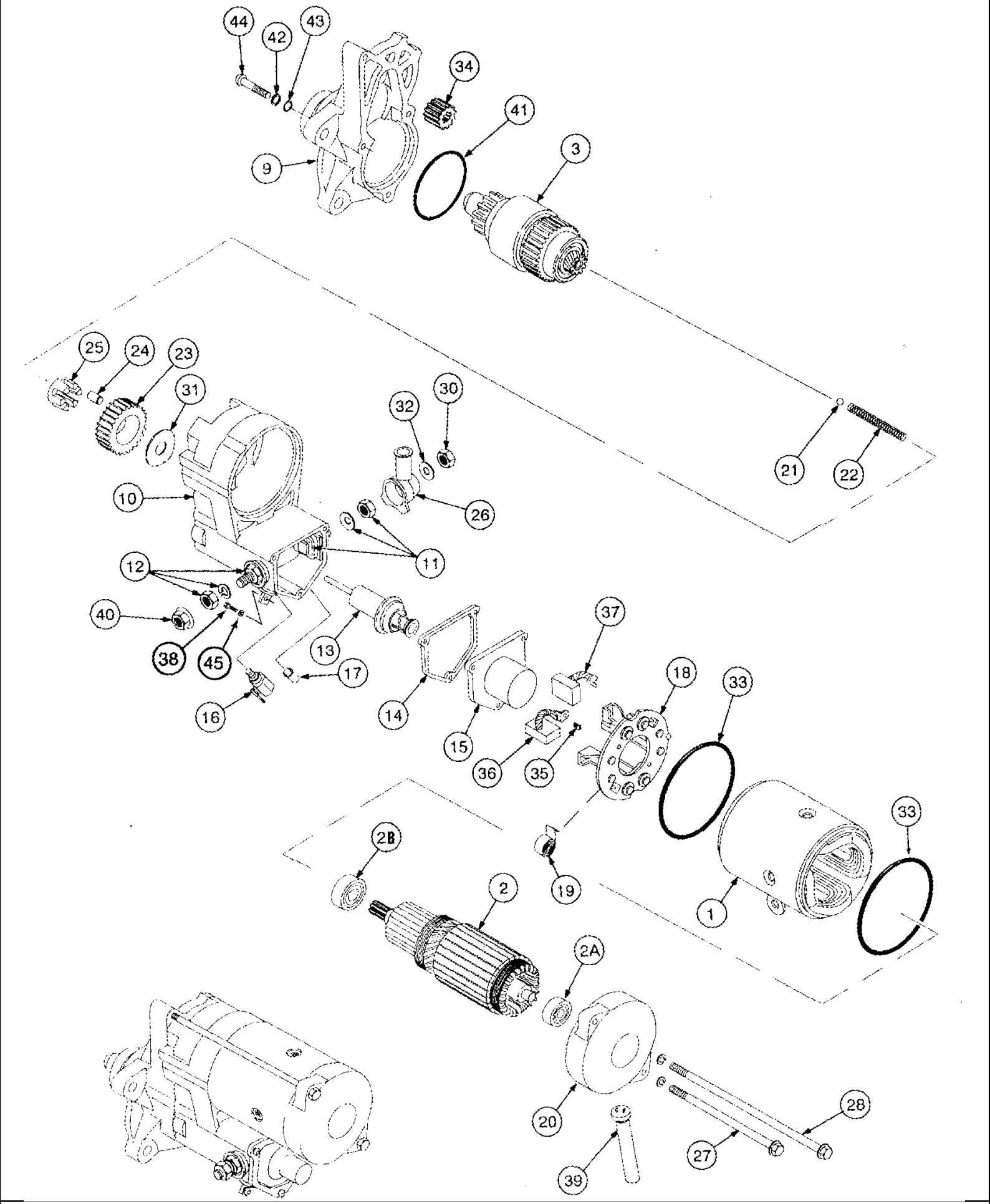

MX285 CASE IH MAGNUM TRACTOR (NORTH AMERICA)

04-20 STARTER ASSEMBLY

ссылка	Номер детали	Кол-во	Описание
	193432A2R	1	REMAN-STARTER, Remanufactured, N.A. Only
	193432A2C	1	CORE-STARTER,
	193432A2	1	MOTOR, Inc. 1 - 45
1	258884A1	1	YOKE,
2	258885A1	1	ARMATURE, Inc. 2A, 2B
2B	452698C1	1	BEARING,
2C	298254A1	1	BEARING, BALL, 15 x 35 x 11 mm
3	258840A1	1	CLUTCH ASSEMBLY,
9	258841A1	1	HOUSING,
	258886A1	1	SWITCH, SOLENOID, Inc. 10 - 17
10	NSS	1	NOT SERVICED SEPARATELY, Housing
11	258871A1	1	KIT, SERVICE, Terminal
12	258869A1	1	KIT, SERVICE, Terminal
13	258874A1	1	PLUNGER,
14	NSS	1	NOT SERVICED SEPARATELY, Gasket, Cover
15	NSS	1	NOT SERVICED SEPARATELY, Cover
16	258877A1	1	TERMINAL CONNECTOR, Solenoid
17	141353A1	1	BUSHING,
18	A49806	1	BRUSH HOLDER, Inc. 19
19	NSS	4	NOT SERVICED SEPARATELY, Spring
20	258880A1	1	FRAME,
21	211-1311	1	BALL, 11/32" Dia, 11/32; 200,CRS
22	A47232	1	SPRING, 2-13/16
23	A49810	1	GEAR,
24	A47235	5	ROLLER,
25	A47236	1	RETAINER,
26	A49805	1	COVER,
27	104594A1	1	BOLT, 7 x 144 mm
28	104593A1	1	BOLT, 7 x 206 mm
30	829-1412	1	NUT, M12, Cl 10, M12; 10
31	141360A1	1	RETAINER,
32	892-11012	1	WASHER, LOCK, M12, M12
33	298253A1	2	RIM,
34	A49809	1	PINION,
35	141361A1	4	SCREW,
36	A49807	2	BRUSH,
37	A49808	2	BRUSH,
38	258820A1	1	SCREW, M5 x 8
39	258883A1	1	BUSHING,
40	829-1412	1	NUT, M12, Cl 10, M12; 10
41	1546500C1	1	O-RING,
	A47230	3	BOLT, Inc. 42 - 44
42	495-81252	3	WASHER, #12, 1/4 x 9/16 x 1/16
43	A47130	3	O-RING,
44	NSS	3	NOT SERVICED SEPARATELY, Bolt

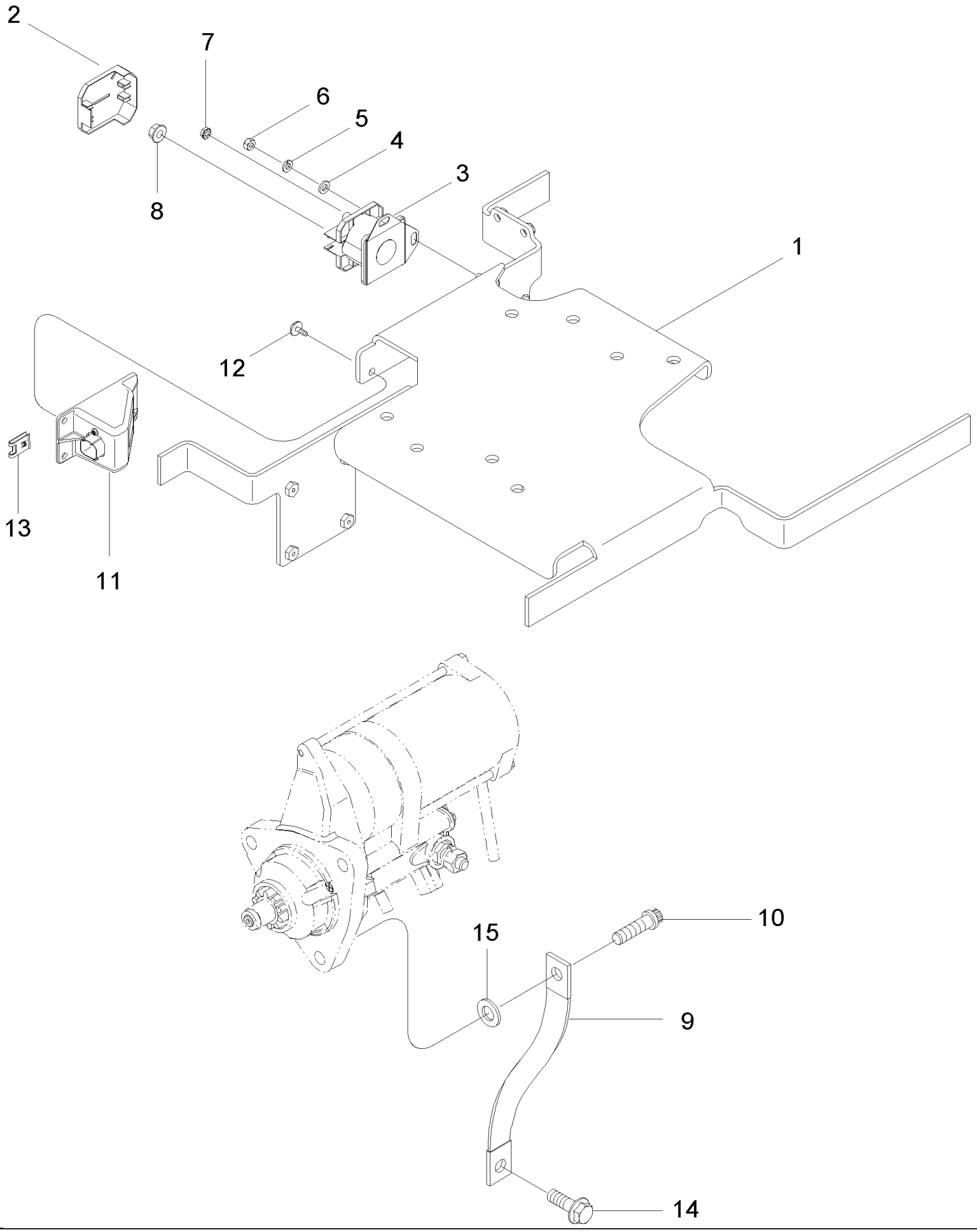
2
7
6
5
4
3
8
1
12
13
11
15
10
9
14

MX285 CASE IH MAGNUM TRACTOR (NORTH AMERICA)

04-21 SOLENOID - STARTER

ссылка	Номер детали	Кол-во	Описание
1	REF	1	INSTRUCTION, Support, Air Cleaner Assy, See Figure 09-11
2	178148A1	1	COVER,
3	183038A1	1	SOLENOID, Switch, Order 178149A1
4	896-11006	2	WASHER, M6 x 13 x 2, HT, 6,6 x 12,5 x 2 mm
5	892-11006	2	WASHER, LOCK, M6, M6
6	829-1406	2	NUT, M6, Cl 10, M6; 10.9
7	193-1000	1	NUT, Keps, w/LW,#10-32, No. 10 NF
8	231-5145	2	NUT, Flg, USR, 5/16"-18,
9	257176A3	1	CABLE, BATTERY (NEG),
10	854-12035	1	BOLT, Hex Flg, M12 x 35, 10.9, M12 x 35; 10.9
11	397496A1	1	CONNECTOR, ELEC, Passive Terminator
12	1975782C1	2	SCREW, SELF TAP, Cross Truss Wash Hd, #10 x 5/8", No.10 st x 5/8
13	131-642	2	NUT, Tinn, U, #10, No. 10
14	868-12040	1	SCREW, 12 pt, Flg Hd, M12 x 40, 12.9, 12 Point, M12 x 40; 12.9
15	896-11012	1	WASHER, M13.5 x 24.5 x 3, HT, 13.5 x 24 x 3 mm

MX285 CASE IH MAGNUM TRACTOR (NORTH AMERICA)

04-22 BATTERY, BATTERY BOX AND CABLES

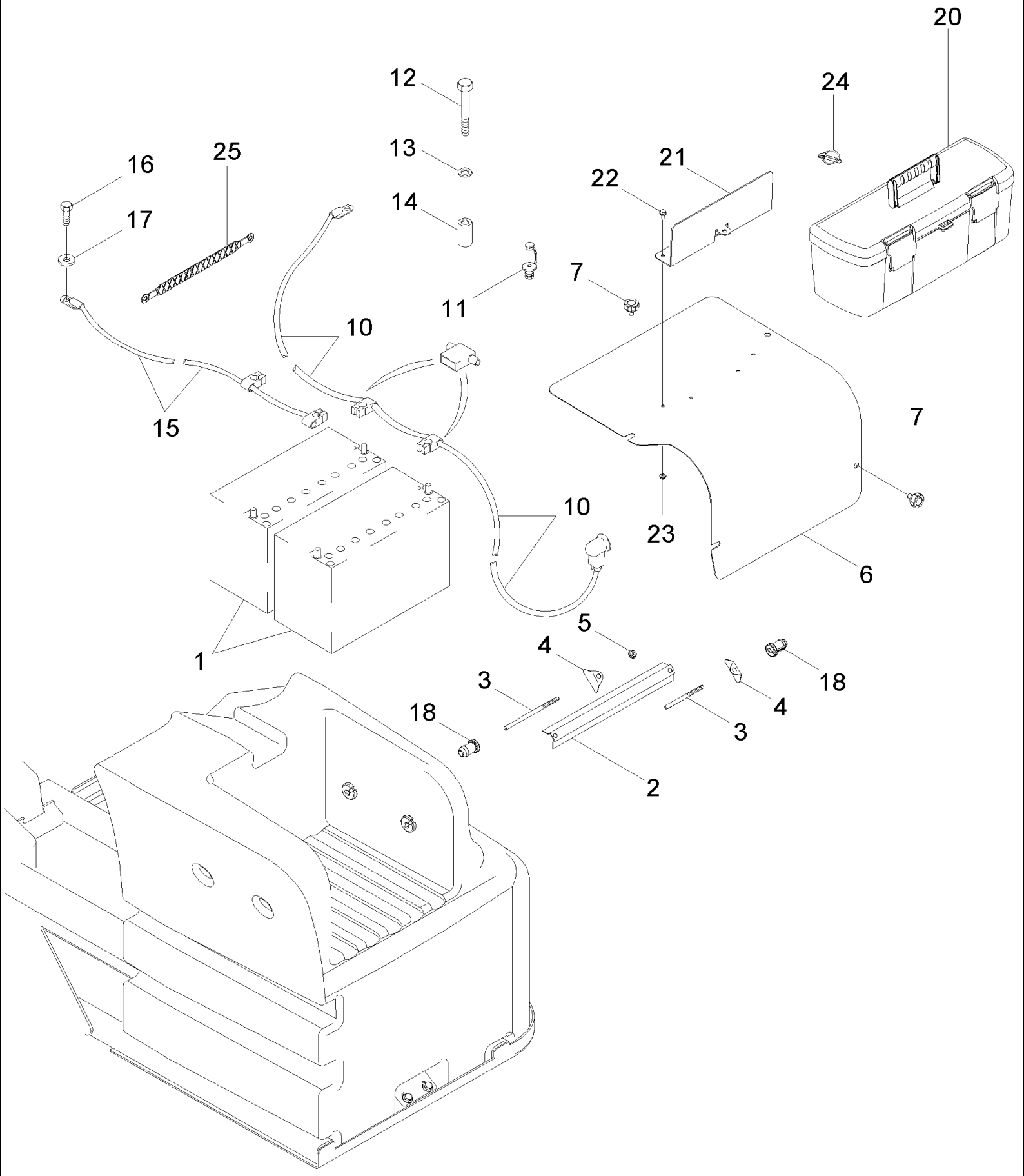

MX285 CASE IH MAGNUM TRACTOR (NORTH AMERICA)

04-22 BATTERY, BATTERY BOX AND CABLES

ссылка	Номер детали	Кол-во	Описание
1	BMF31G	2	BATTERY, DRY, 12V, Not For UK
1	ZKA1000012	2	BATTERY, WET, UK Only
2	255675A1	2	ANGLE BAR,
3	246157A1	4	TRUSS ROD,
4	255728A1	4	PLATE, SUPPORT,
5	825-5148	4	NUT, M8, Flg Ser,
6	238016A2	1	COVER,
7	394133A1	4	KNOB,
10	239127A3	1	CABLE ASSY., Positive
11	240557A1	1	STUD,
12	814-20070	1	BOLT, Hex, M20 x 70, 8.8, M20 x 70
13	896-11020	1	WASHER, M20 x 37.5 x 4, HT, 22 x 37 x 4 mm
14	1331939C1	1	SPACER,
15	87406303	1	CABLE, Ground, 645 mm (25-25/64 in), BSN JAZ132497
15	87441877	1	CABLE, Ground, 790 mm (31-7/64 in), ASN JAZ132497
16	614-12025	1	BOLT, Hex, M12 x 25, 8.8, M12 x 25; 8,8
17	896-11012	1	WASHER, M13.5 x 24.5 x 3, HT, 13,5 x 24 x 3 mm
18	318864A1	4	SEAL, Toolbox
20	87400261	1	BOX, TOOL,
21	255821A2	1	SUPPORT,
22	905-6012	4	BOLT, Hex Serr Flg, M6 x 12, M6 x 12
23	825-5146	4	NUT, M6, Flg Ser,
24	82013836	1	PIN, ROLL,
25	86992713	1	STRAP, GROUND, , BSN JAZ132478
25	87424307	1	STRAP, GROUND, , ASN JAZ132478

MX285 CASE IH MAGNUM TRACTOR (NORTH AMERICA)

04-23 WINDSHIELD WIPER ASSEMBLY - FRONT AND REAR

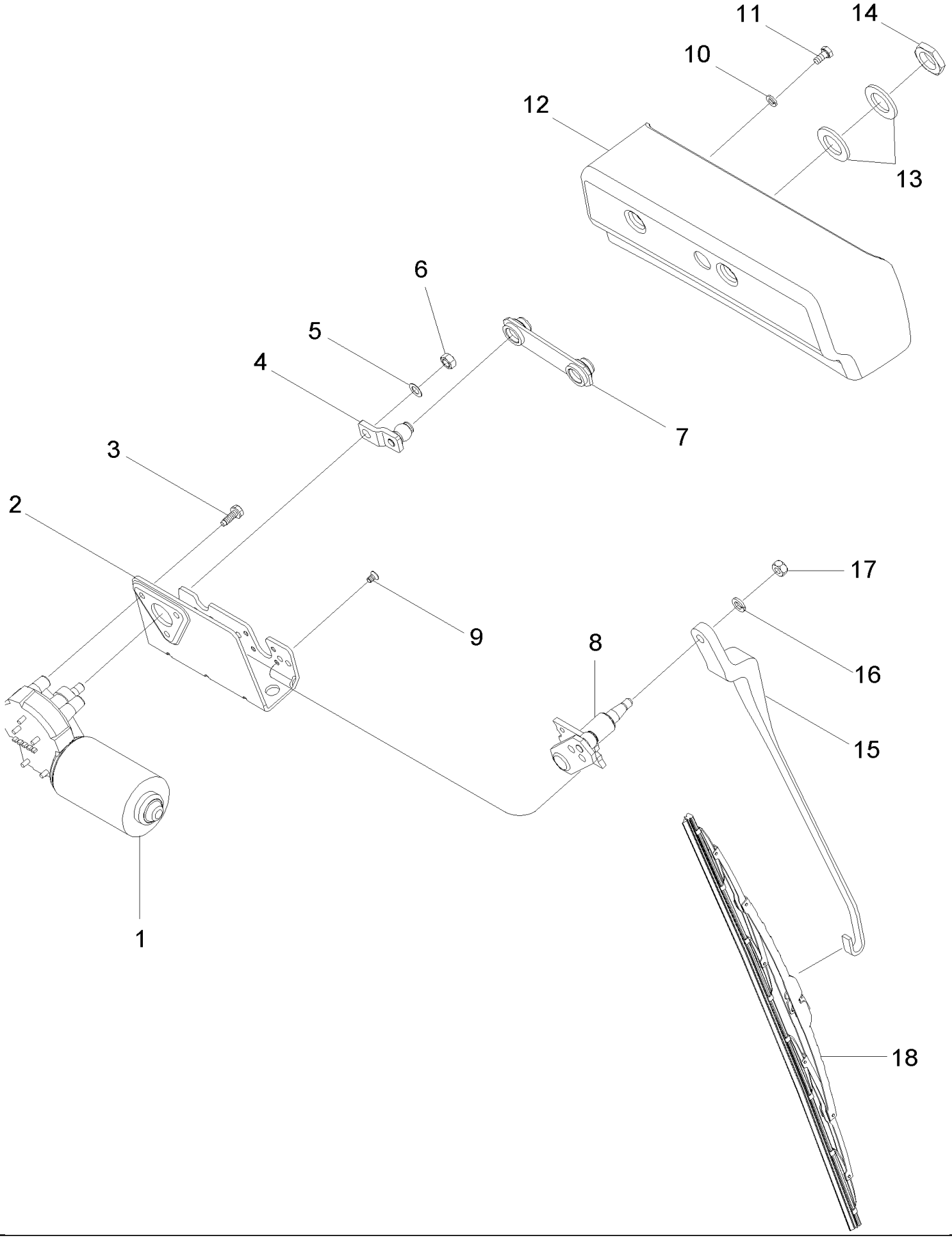

MX285 CASE IH MAGNUM TRACTOR (NORTH AMERICA)

04-23 WINDSHIELD WIPER ASSEMBLY - FRONT AND REAR

ссылка	Номер детали	Кол-во	Описание
1	A186256	1	WIPER MOTOR, Inc. 2 - 9
2	N8359	1	SUPPORT,
3	N8362	3	SCREW, Hex, M6 x 18.5, Spc, w/LW,
4	N8360	1	SUPPORT,
5	N8361	1	WASHER,
6	L112090	1	NUT,
7	N8358	1	ROD,
8	N14112	1	SHAFT,
9	N8356	1	SCREW, Flat Cross Csk Hd, M5 x 8,
10	892-11006	2	WASHER, LOCK, M6, M6
11	614-6012	2	BOLT, Hex, M6 x 12, 8.8, M6 x 12; 8.8
12	401109A3	1	CAGE,
13	895-11020	2	WASHER, M20 x 37 x 3, 22 x 37 x 3 mm
14	L112087	1	NUT, M20
15	436432A1	1	WIPER ARM, 581 mm
16	892-11008	1	WASHER, LOCK, M8, M8
17	825-1408	1	NUT, M8, Cl 8,
18	448476A1	1	SET OF BLADES, 600 mm
19	87529297	2	CLIP, (Not Shown), Without Rear Wiper

MX285 CASE IH MAGNUM TRACTOR (NORTH AMERICA)

04-24 WINDSHIELD WASHER - FRONT AND REAR

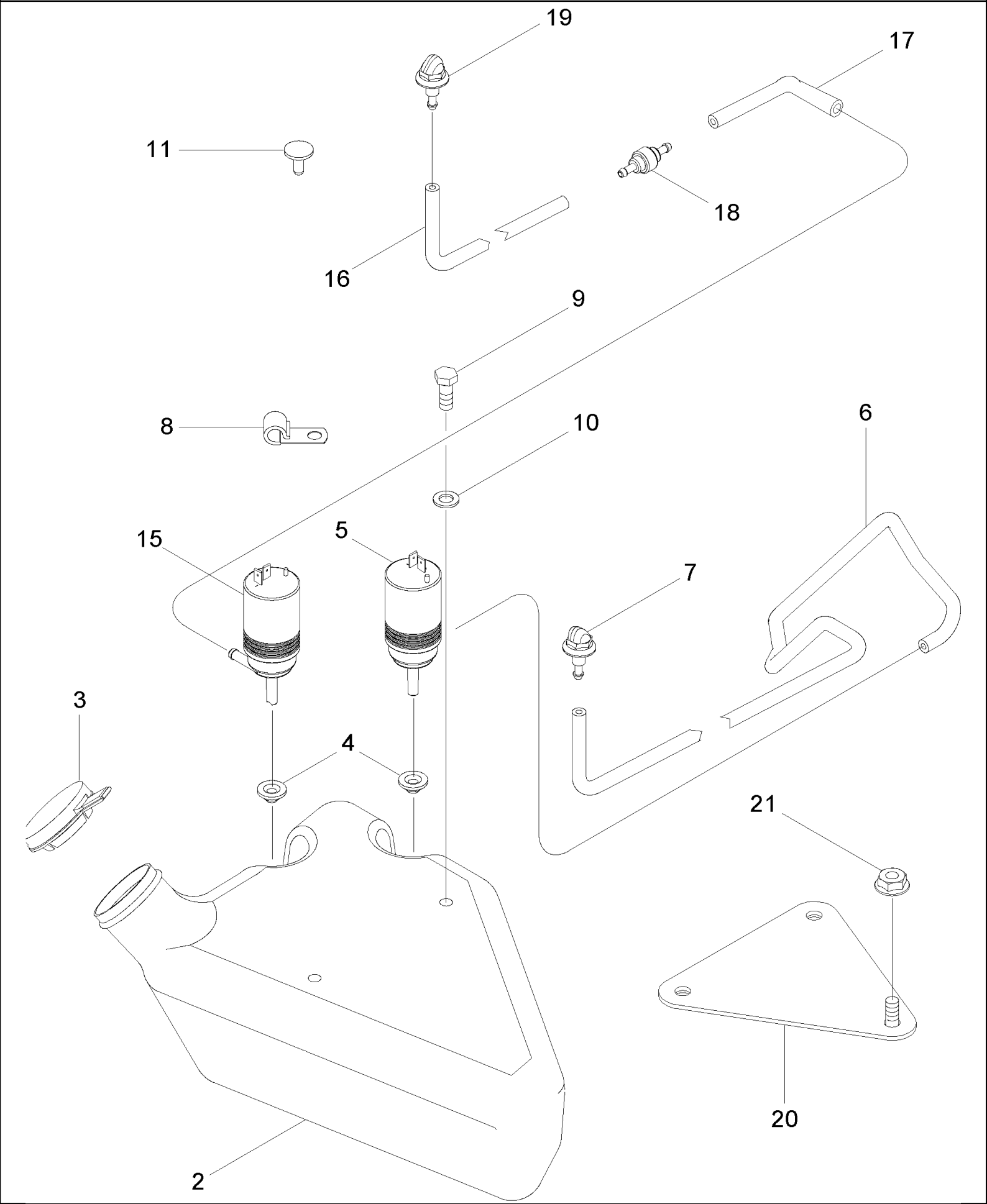

MX285 CASE IH MAGNUM TRACTOR (NORTH AMERICA)

04-24 WINDSHIELD WASHER - FRONT AND REAR

ссылка	Номер детали	Кол-во	Описание
	301523A3	1	RESERVOIR, Inc. 2 - 4
2	NSS	1	NOT SERVICED SEPARATELY, Tank
3	307130A1	1	COVER,
4	196830A1	2	GROMMET,
5	1964696C2	1	WIPER MOTOR, Front
6	1964828C1	1	PIPE, 1145 mm (45-1/8 in) Cut From 1968141CX
7	3229749R1	1	NOZZLE CAP, Front
8	516-2295	1	CLIP, J, 7/16" Insul, 5/16" Bolt, 3/8 ID
9	614-8020	2	BOLT, Hex, M8 x 20, 8.8, M8 x 20; 8,8
10	895-11008	2	WASHER, M8 x 16 x 1.6, 9 x 17 x 1,6 mm
11	196831A1	1	PLUG,
15	1964696C2	1	WIPER MOTOR, Rear
16	1968058C1	1	HOSE, Cut From 1968141CX
17	233105A1	1	HOSE, 250 mm (10 in) Cut From 1968141CX
18	K307050	1	VALVE,
19	3229749R1	1	NOZZLE CAP, Rear
20	87410368	1	BRACKET, Used With Severe Duty Air Cleaner
21	825-2408	1	NUT, M8 x 1.25, Flg, Cl 8,
22	87529297	1	CLIP, (Not Shown), Without Rear Wiper

MX285 CASE IH MAGNUM TRACTOR (NORTH AMERICA)

04-25 HEADLAMPS

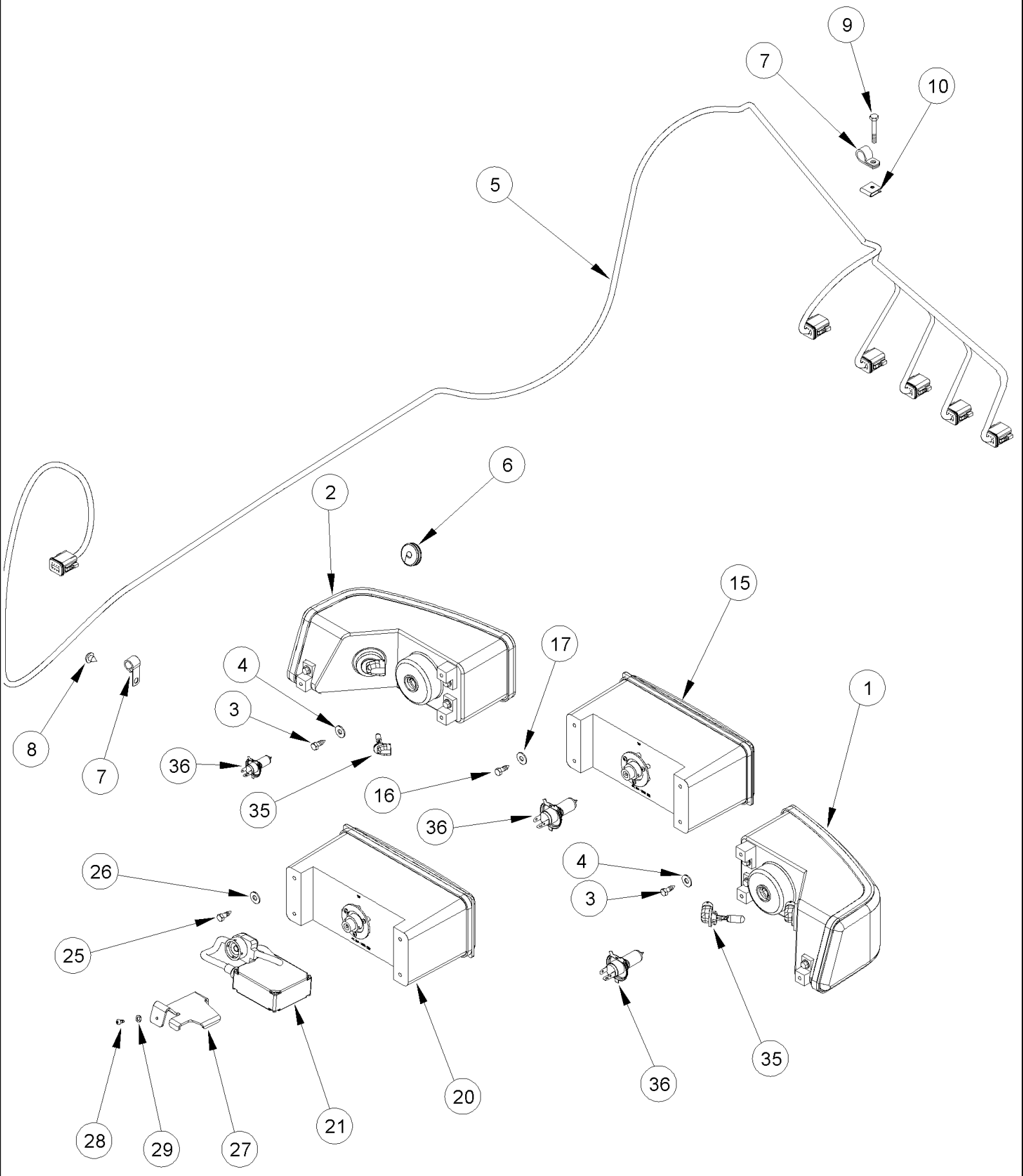

MX285 CASE IH MAGNUM TRACTOR (NORTH AMERICA)

04-25 HEADLAMPS

ссылка	Номер детали	Кол-во	Описание
1	87429390	1	HEADLAMP, RH, RH Dip, Inc. 35, 36, North America Only, When Replacing Original Headlamp It is Recommended That Both Headlamps Are Changed.
1	232450A2	1	HEADLIGHT, Right Hand, LH Dip, Inc. 35, 36, Australia Only
2	87429389	1	HEADLAMP, LH, RH Dip, Inc. 35, 36, North America Only, When Replacing Original Headlamp It is Recommended That Both Headlamps Are Changed.
2	232451A2	1	HEADLIGHT, Left Hand, LH Dip, Inc. 35, 36, Australia Only
3	779-14619	6	SCREW, SELF TAP, Hex Hd, M6.3 x 19, M6,3 st x 19, North America Only
4	495-21031	6	WASHER, 1/4", 5/16 x 3/4 x 1/16, North America Only
4	259713A1	6	CLIP, (Not Shown), Australia Only
5	436058A2	1	HARNESS, Without Front Hitch
5	86987468	1	HARNESS, With Front Hitch
6	411632A1	1	GROMMET,
7	516-22127	6	CLAMP, J, 9/16" Insul, 5/16" Bolt, 1/2 ID
8	93199C1	2	FASTENER,
9	1975782C1	4	SCREW, SELF TAP, Cross Truss Wash Hd, #10 x 5/8", No.10 st x 5/8
10	96900C1	4	NUT, U, #10-16, Panel type, No. 10
15	232454A2	1	LAMP, WORK, Center, Work Lamp, Halogen, Inc. 36
16	779-14619	4	SCREW, SELF TAP, Hex Hd, M6.3 x 19, M6,3 st x 19
17	495-21031	4	WASHER, 1/4", 5/16 x 3/4 x 1/16
20	232455A2	1	LAMP, WORK, Center, Work Lamp, High Intensity Discharge
21	322332A1	1	BALLAST,
25	779-14619	4	SCREW, SELF TAP, Hex Hd, M6.3 x 19, M6,3 st x 19
26	495-21031	4	WASHER, 1/4", 5/16 x 3/4 x 1/16
27	319929A1	1	SUPPORT,
28	760-14313	1	SCREW, SELF TAP, Pan Hd, M4.2 x 13, M4,2 x 13
29	895-11005	1	WASHER, M5 x 10 x 1, 5,5 x 10 x 1 mm
35	91967C1	1	BULB,
36	323093A1	1	BULB, 885-12V, Work Lamp

MX285 CASE IH MAGNUM TRACTOR (NORTH AMERICA)

04-26 HEADLAMPS - AUXILIARY

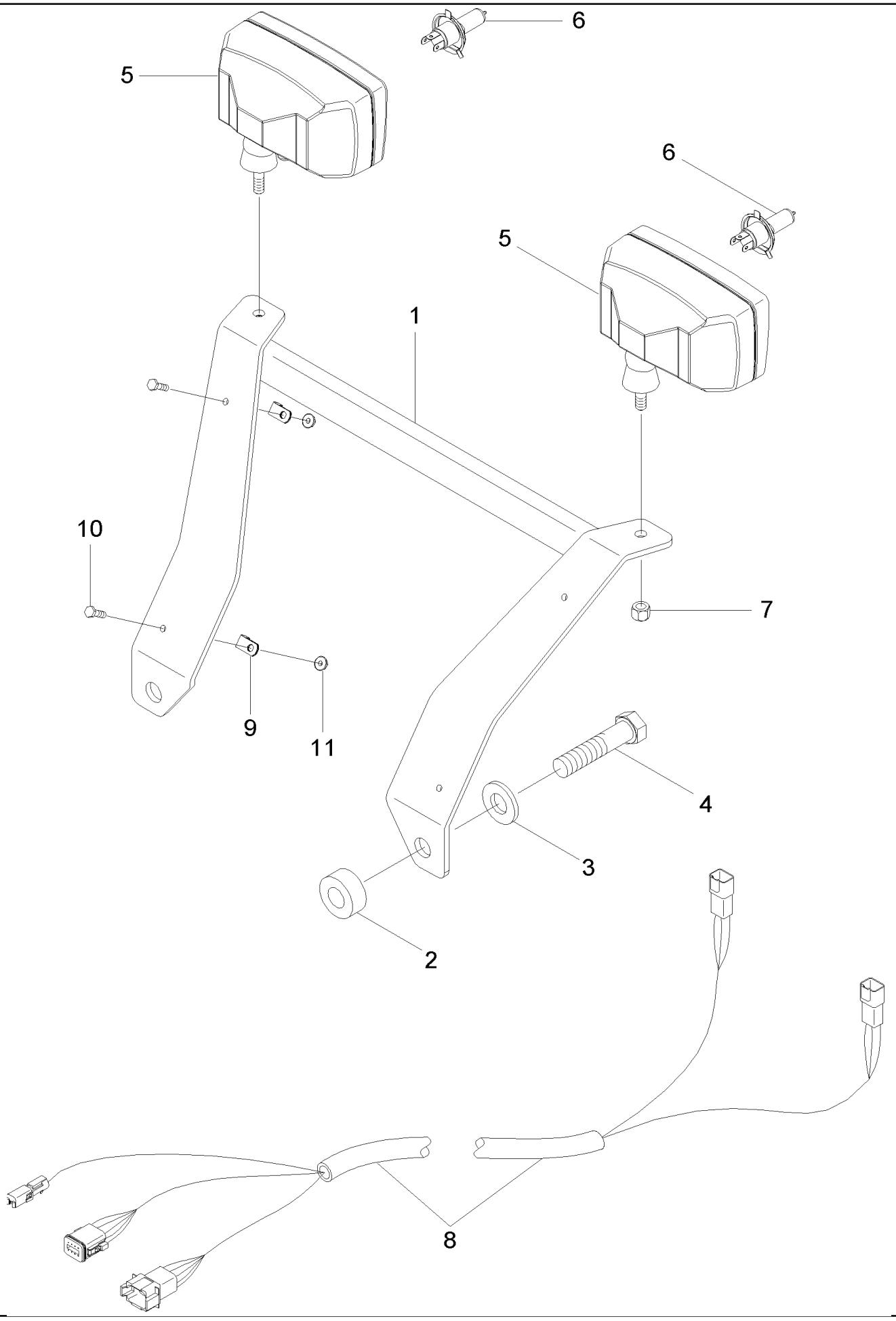

MX285 CASE IH MAGNUM TRACTOR (NORTH AMERICA)

04-26 HEADLAMPS - AUXILIARY

ссылка	Номер детали	Кол-во	Описание
1	87403780	1	BRACKET,
2	87403935	2	SPACER,
3	896-15020	2	WASHER, M20 x 44.5 x 5, HT, 22 x 44 x 5mm
4	258504A1	2	SCREW, M20 x 90; 10.9
5	87403654	2	HEADLAMP, LH, Left Hand Dip, Inc. 6, 7, Optional With 87403655
5	87403655	2	HEADLAMP, LH, Right Hand Dip, Inc. 6, 7, Optional With 87403654
6	91967C1	2	BULB, H4
7	832-10410	2	NUT, LOCK, M10 x 1.5, Cl 8,
8	86984514	1	HARNESS, Front Hitch Headlight
9	515-2179	4	CLAMP, 5/16", Insul, 1/4" Bolt, 7,9 mm
10	614-6020	4	BOLT, Hex, M6 x 20, 8.8, M6 x 20; 8.8
11	825-2406	4	NUT, M6 x 1, Flg, Cl 8,

MX285 CASE IH MAGNUM TRACTOR (NORTH AMERICA)

04-27 LAMPS - WIDE TRANSPORT

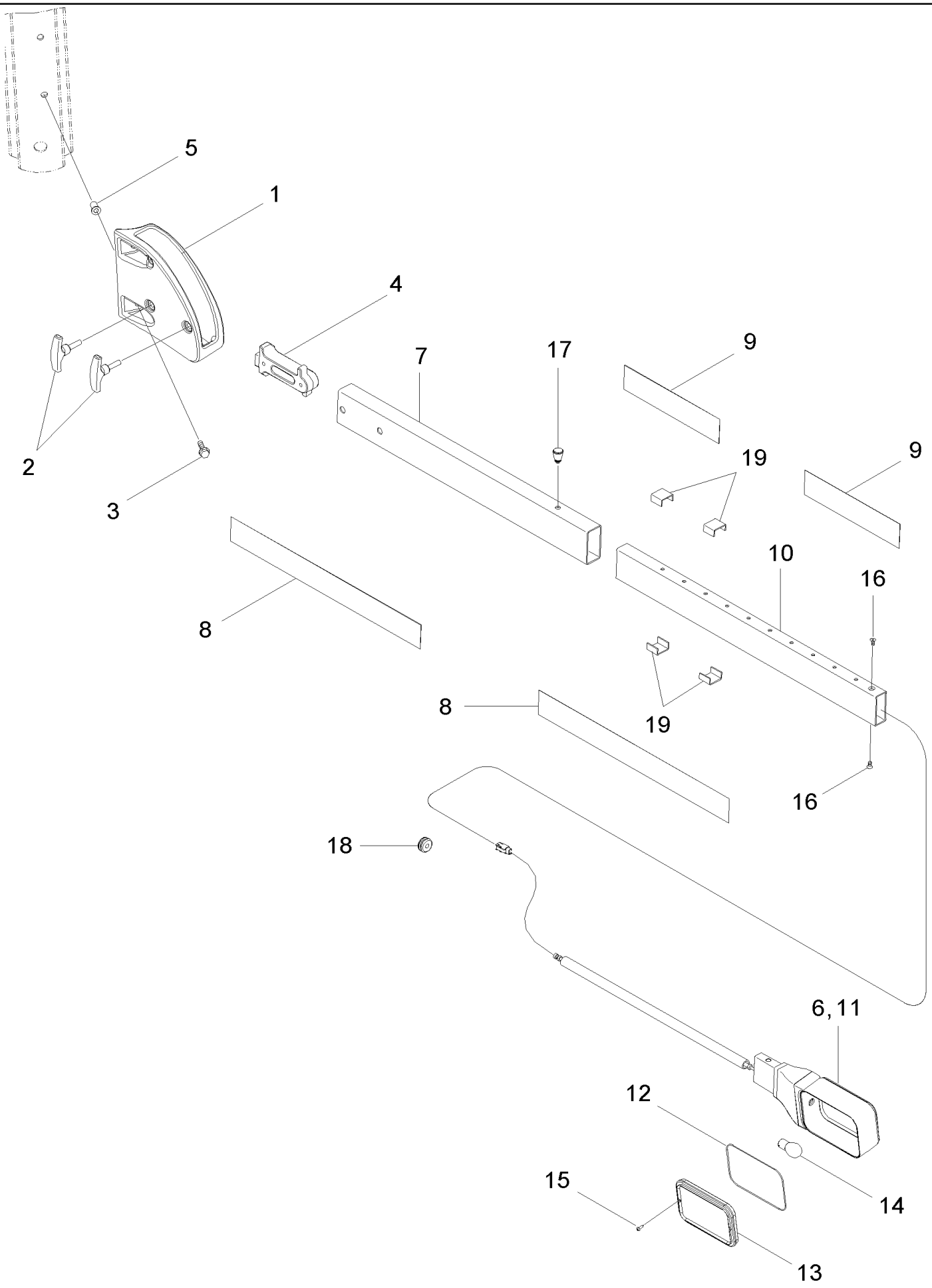

MX285 CASE IH MAGNUM TRACTOR (NORTH AMERICA)

04-27 LAMPS - WIDE TRANSPORT

ссылка	Номер детали	Кол-во	Описание
1	303030A1	1	SUPPORT, Right Hand, Shown
1	303128A1	1	SUPPORT, Left Hand
2	400042A1	4	HANDLE,
3	514-636	4	BOLT, Hex Serr Flg, M8 x 30, M8 x 30
4	321647A2	2	RETAINER,
5	P35448	4	RIVET,
6	442017A1	1	LIGHT ASSY., Right Hand, Shown, Inc. 7 - 17
6	442018A1	1	LIGHT ASSY., Left hand, Inc 7 - 17
7	410109A1	1	TUBE, Inner
8	297221A1	2	DECAL, Red
9	297223A1	2	DECAL, Yellow
10	410110A1	1	TUBE, Outer
11	353734A1	1	LIGHT, WARNING, Right Hand, Shown, Inc. 12 - 14
11	353735A1	1	LIGHT, WARNING, Left Hand, Inc. 12 - 14
12	233561A1	2	O-RING,
13	232212A1	2	LENS,
14	A41264	1	BULB,
15	NSS	2	NOT SERVICED SEPARATELY, Screw
16	569-3	2	SCREW, Hex Soc Flat Hd, M5 x 10, 10.9, M5 x 10; 10.9
17	400039A1	1	KNOB,
18	87412155	2	GROMMET,
19	321663A1	4	PAD, SLIDING,

MX285 CASE IH MAGNUM TRACTOR (NORTH AMERICA)

04-28 LAMPS - FRONT WORK

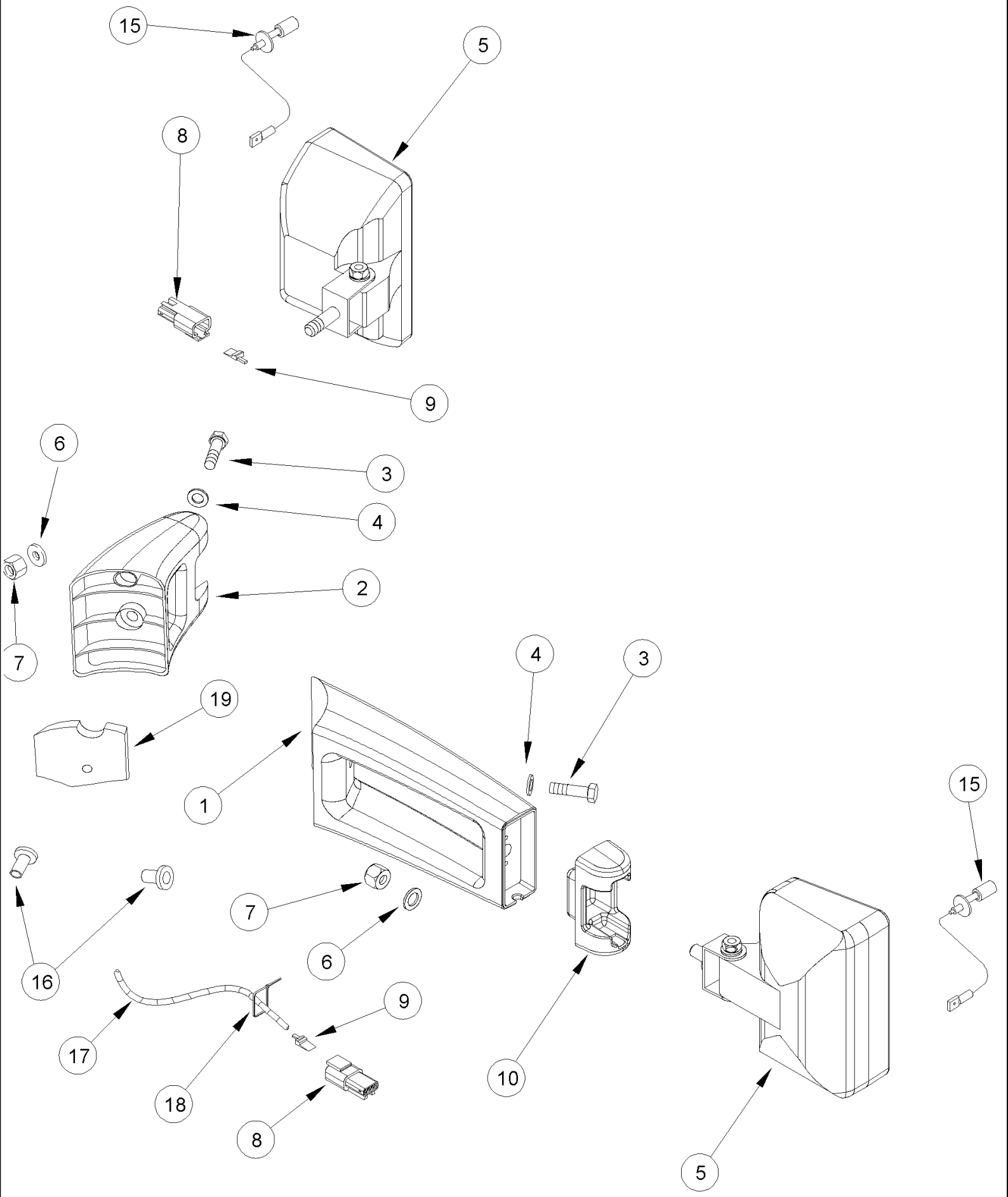

MX285 CASE IH MAGNUM TRACTOR (NORTH AMERICA)

04-28 LAMPS - FRONT WORK

ссылка	Номер детали	Кол-во	Описание
1	300182A2	1	SUPPORT, Right Hand
2	300184A3	1	BRACKET, Left Hand
3	514-637	2	BOLT, Hex, M8 x 35, 8.8, Full Thd, M8 x 35
4	256402A1	2	WASHER, 9 x 17 x 1,6 mm
5	301891A2	2	LAMP, Work Lamp, Inc. 15, See Figure 04-31
6	895-18010	2	WASHER, M10 x 18 x 1.6, 11 x 18 x 1,6 mm
7	832-10410	2	NUT, LOCK, M10 x 1.5, Cl 8,
8	222136A1	2	CONNECTOR, ELEC, 2 Pin
9	222848A1	2	CONNECTOR, ELEC,
10	300185A2	1	COVER,
15	1312210C2	1	BULB, 12V - 55W
16	P35448	2	RIVET, M8
17	387169A1	2	CONDUIT, 75 mm, Cut From 387171A1
18	387281A1	4	STRAP, SECURING,
19	391623A1	1	SEAL,

MX285 CASE IH MAGNUM TRACTOR (NORTH AMERICA)

04-29 LAMPS - CAB ROOF

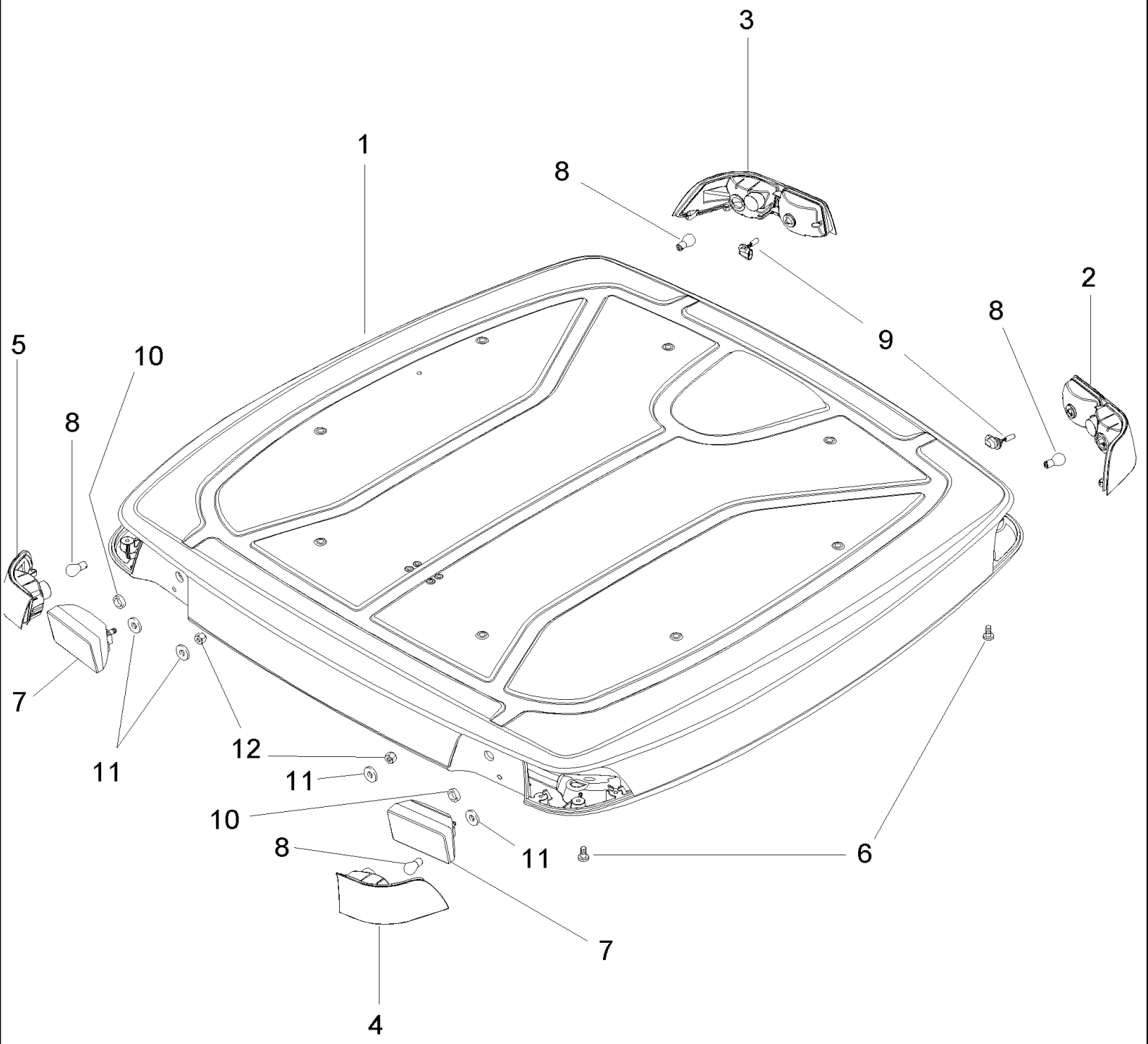

MX285 CASE IH MAGNUM TRACTOR (NORTH AMERICA)

04-29 LAMPS - CAB ROOF

ссылка	Номер детали	Кол-во	Описание
1	REF	1	INSTRUCTION, Roof, See Figure 09-14
2	279220A1	1	LIGHT ASSY., Right Hand Front, Work Lamp, Warning Lamp
3	279219A1	1	LIGHT ASSY., Left Hand Front, Work Lamp, Warning Lamp
4	279223A1	1	LIGHT, TAIL, Right Hand Rear, Warning Lamp
5	279224A1	1	LIGHT, TAIL, Left Hand Rear, Warning Lamp
6	840-1612	12	SCREW, Cross Pan Hd, M6 x 12, M6 x 12; 4.8
7	178345A1	2	LIGHT, WORK, Work Lamp, See Figure 04-31
8	A41264	4	BULB, 12V, No. 1156
9	323094A1	2	BULB, 894-12V
10	96901C1	2	GROMMET,
11	895-18010	4	WASHER, M10 x 18 x 1.6, 11 x 18 x 1,6 mm
12	832-10410	2	NUT, LOCK, M10 x 1.5, Cl 8,

MX285 CASE IH MAGNUM TRACTOR (NORTH AMERICA)

04-30 LAMPS - REAR FENDER AND REMOTE HITCH SWITCH

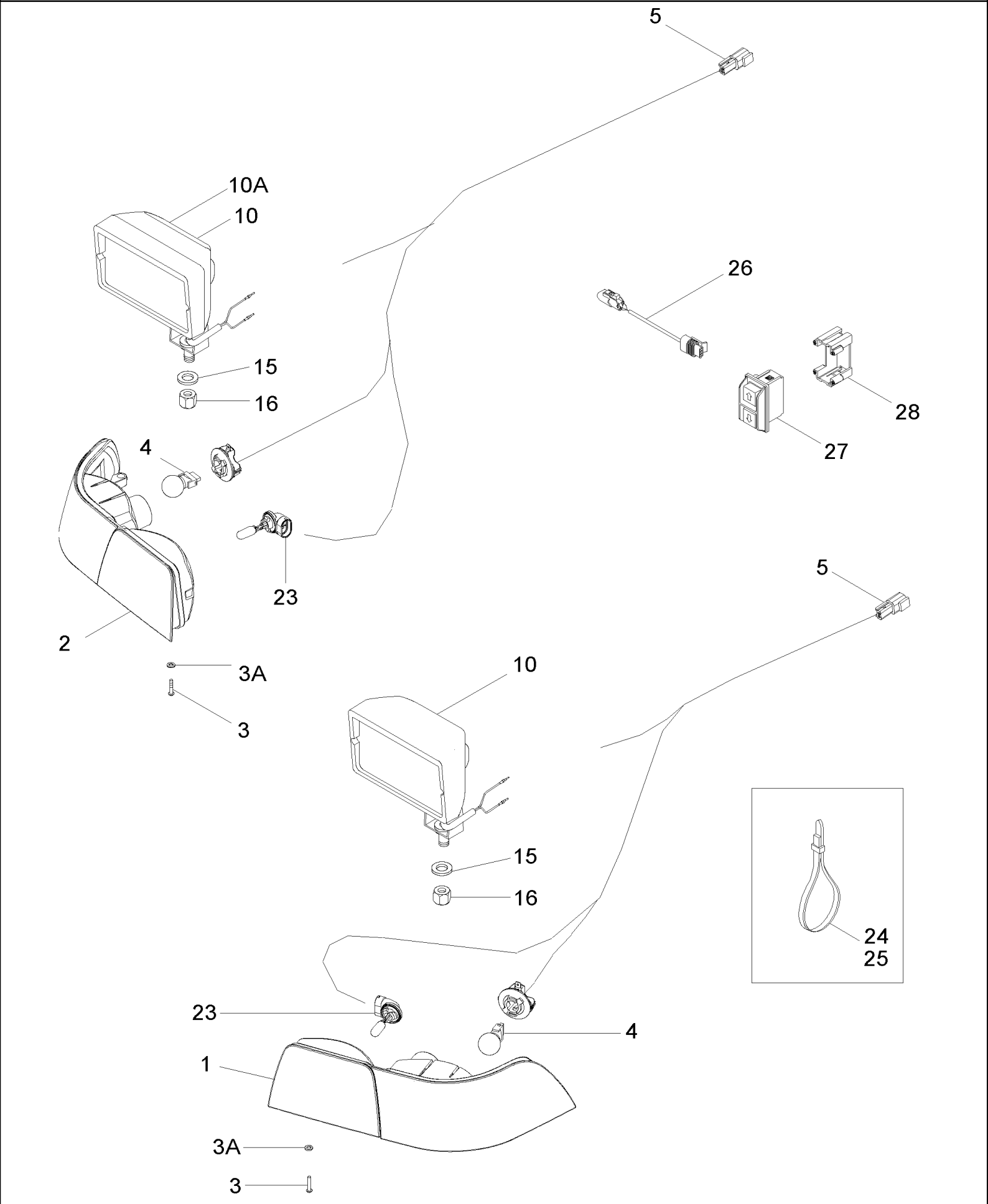

MX285 CASE IH MAGNUM TRACTOR (NORTH AMERICA)

04-30 LAMPS - REAR FENDER AND REMOTE HITCH SWITCH

ссылка	Номер детали	Кол-во	Описание
1	357540A1	1	LIGHT ASSY., Right Hand, Combination
2	357541A1	1	LIGHT ASSY., Left Hand, Combination
3	840-1612	6	SCREW, Cross Pan Hd, M6 x 12, M6 x 12; 4.8
3A	895-15006	6	WASHER, M6 x 25 x 1.6, 6,6 x 25 x 1,6 mm
4	279916A1	2	BULB,
5	86991727	2	HARNESS,
10	431025A1	1-2	LAMP, Work Lamp, Right and Left Hand Without HID, Right Hand Only With HID, See Figure 04-31
10A	447501A2	1	ASSEMBLY, HID Work Lamp, Left Hand Only, See Figure 04-31
15	896-11012	2	WASHER, M13.5 x 24.5 x 3, HT, 13,5 x 24 x 3 mm
16	832-46412	2	NUT, LOCK, M12 x 1.75, Cl 8, M12; 8
23	323094A1	1	BULB, 894-12V
24	347610A1	1	ANCHOR,
25	L11541	AR	STRAP, 7 in
26	86994387	2	HARNESS, Hitch Switch Extension
27	220415A2	2	SWITCH, REMOTE CONTROL, Hitch Remote
28	220416A2	2	CONNECTOR, ELEC, Hitch Switch Retainer

MX285 CASE IH MAGNUM TRACTOR (NORTH AMERICA)

04-31 WORK LAMPS - ROOF AND REAR FENDERS

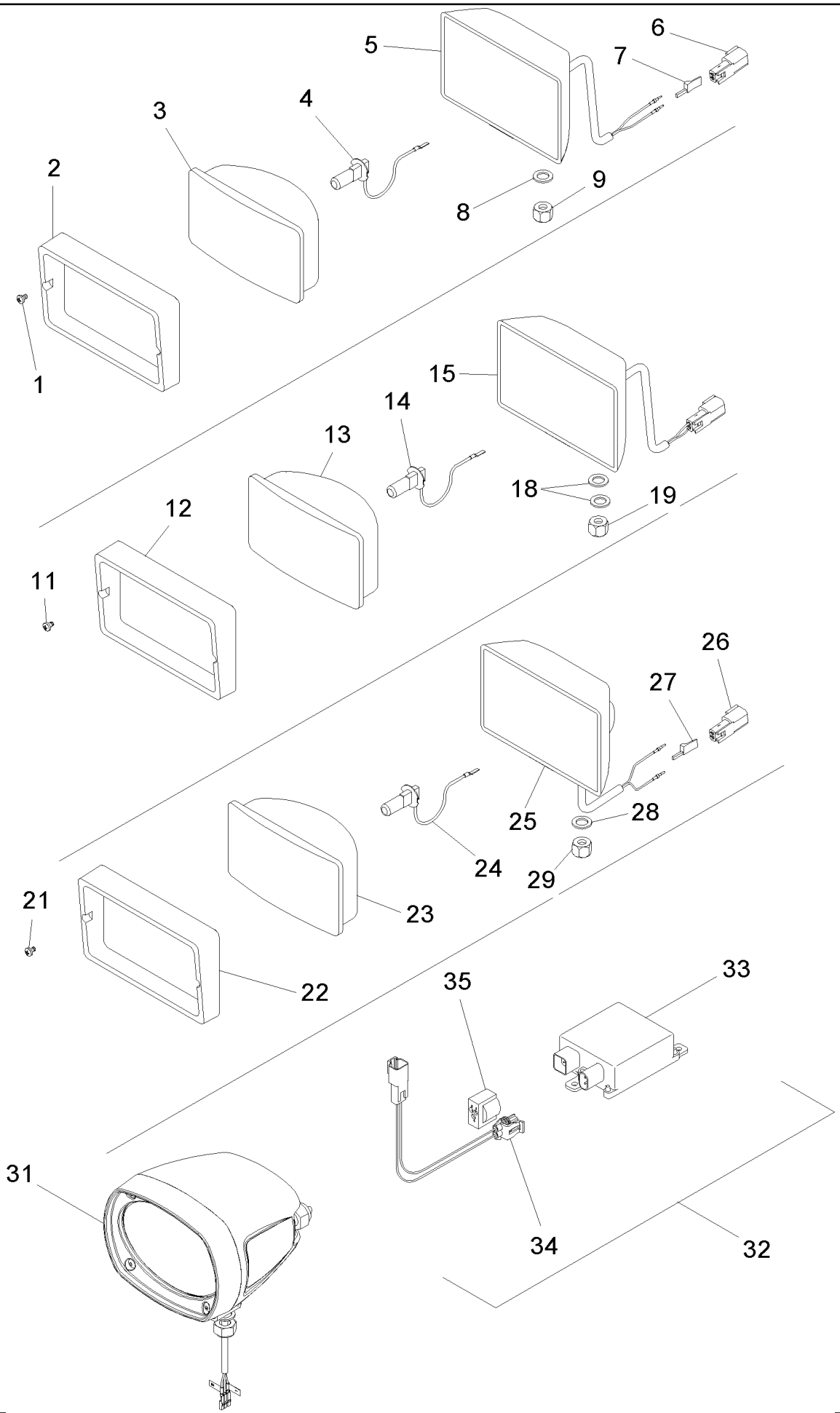

MX285 CASE IH MAGNUM TRACTOR (NORTH AMERICA)

04-31 WORK LAMPS - ROOF AND REAR FENDERS

ссылка	Номер детали	Кол-во	Описание
	301891A2	1	LAMP, Cab Roof Front Work Lamp, Inc. 1 - 5
1	260-54312	2	SCREW, SELF TAP, Cross Pan Hd, #6 x 3/4", No. 6 x 3/4
2	1964806C1	1	BEZEL,
3	360866A1	1	LENS,
4	1312210C2	1	BULB, 12V, 55W
5	NSS	1	NOT SERVICED SEPARATELY, Base
6	222136A1	2	CONNECTOR, ELEC,
7	222848A1	2	CONNECTOR, ELEC, Wedge
8	895-18010	2	WASHER, M10 x 18 x 1.6, 11 x 18 x 1,6 mm
9	832-10410	2	NUT, LOCK, M10 x 1.5, Cl 8,
	178345A1	1	LIGHT, WORK, Cab Roof Rear Work Lamps, Inc. 11 - 15
11	260-54312	2	SCREW, SELF TAP, Cross Pan Hd, #6 x 3/4", No. 6 x 3/4
12	1964806C1	1	BEZEL,
13	276498A1	1	LENS,
14	1312210C2	1	BULB, 12V, 55W
15	NSS	1	NOT SERVICED SEPARATELY,
18	895-18010	4	WASHER, M10 x 18 x 1.6, 11 x 18 x 1,6 mm
19	832-10410	2	NUT, LOCK, M10 x 1.5, Cl 8,
	431025A1	1-2	LAMP, Rear Fender Work Lamp, Twin Beam - Non HID, Inc. 21 - 29
21	260-54312	2	SCREW, SELF TAP, Cross Pan Hd, #6 x 3/4", No. 6 x 3/4
22	NSS	1	NOT SERVICED SEPARATELY, Bezel
23	NSS	1	NOT SERVICED SEPARATELY, Lens
24	1312210C2	2	BULB, 12V - 55W
25	NSS	1	NOT SERVICED SEPARATELY, Base
26	225315C1	2	CONNECTOR, ELEC,
27	225318C1	2	WEDGE,
28	896-11012	2	WASHER, M13.5 x 24.5 x 3, HT, 13,5 x 24 x 3 mm
29	832-46412	2	NUT, LOCK, M12 x 1.75, Cl 8, M12; 8
	447501A2	1	ASSEMBLY, Rear Fender HID Work Lamp, Left Hand Only, Inc. 31, 32
31	447754A2	1	LAMP, WORK, HID
32	86993698	1	BALLAST, Assembly, HID, Inc. 33 - 35
33	447742A1	1	BALLAST,
34	86993699	1	CABLE, ELECTRIC, Ballast to Rear
35	86993701	1	CONNECTOR, ELEC, 3 Cavity

MX285 CASE IH MAGNUM TRACTOR (NORTH AMERICA)

04-32 LAMP - STROBE

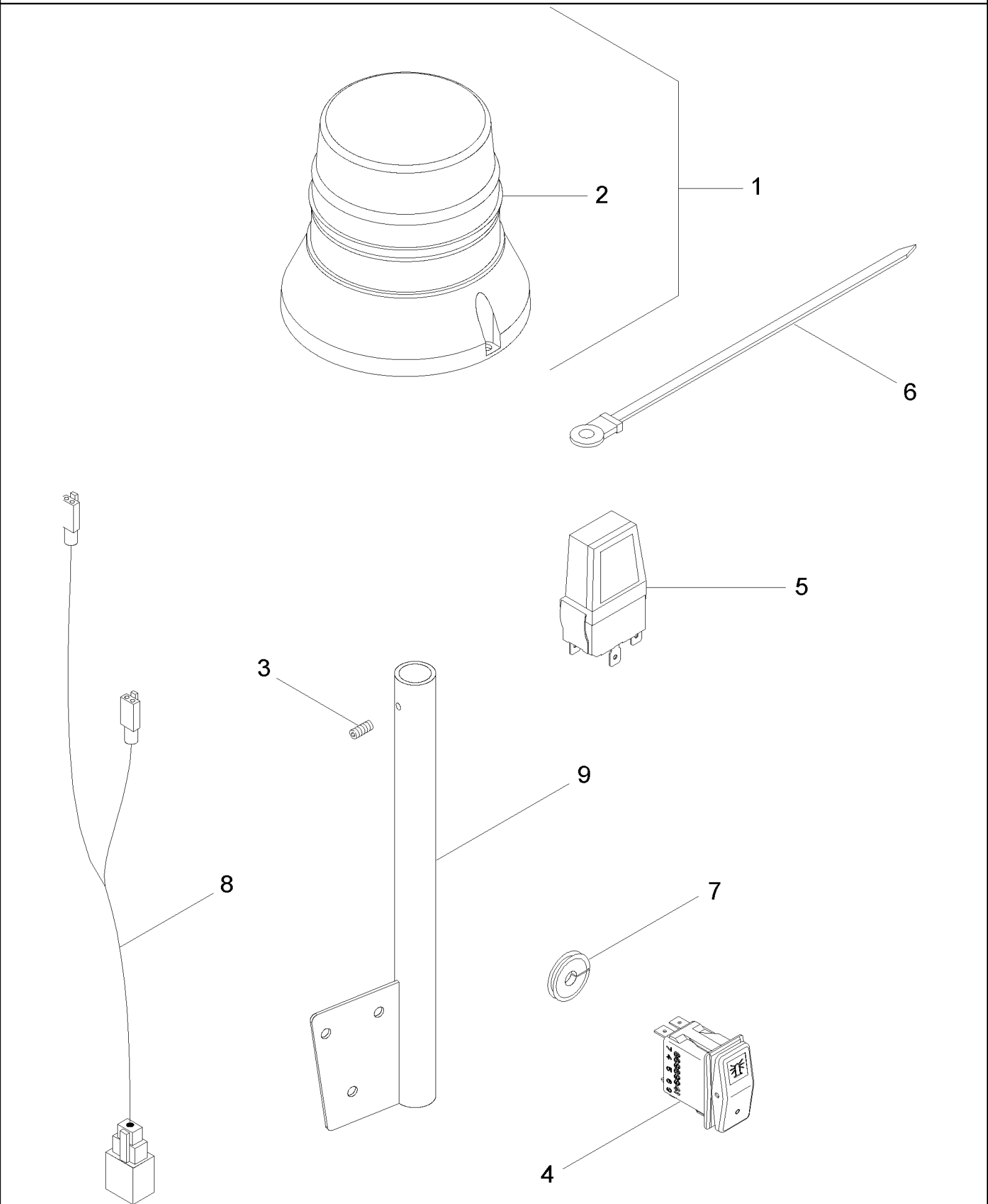

MX285 CASE IH MAGNUM TRACTOR (NORTH AMERICA)

04-32 LAMP - STROBE

ссылка	Номер детали	Кол-во	Описание
1	279013A3	AR	LAMP, Strobe
2	87419456	1	LENS, Strobe Lamp
3	878-1066	AR	SET SCREW, Hex Soc, M6 x 6, Cup Pt, M6 x 6
4	86989941	1	SWITCH, LIGHTS,
5	323095A1	AR	BULB,
6	L18337	AR	STRAP, CABLE, 9.95"-12.1" lg,
7	182045A1	2	GROMMET,
8	447666A1	1	HARNESS, Dual Strobe Jumper
9	450672A1	AR	BRACKET,

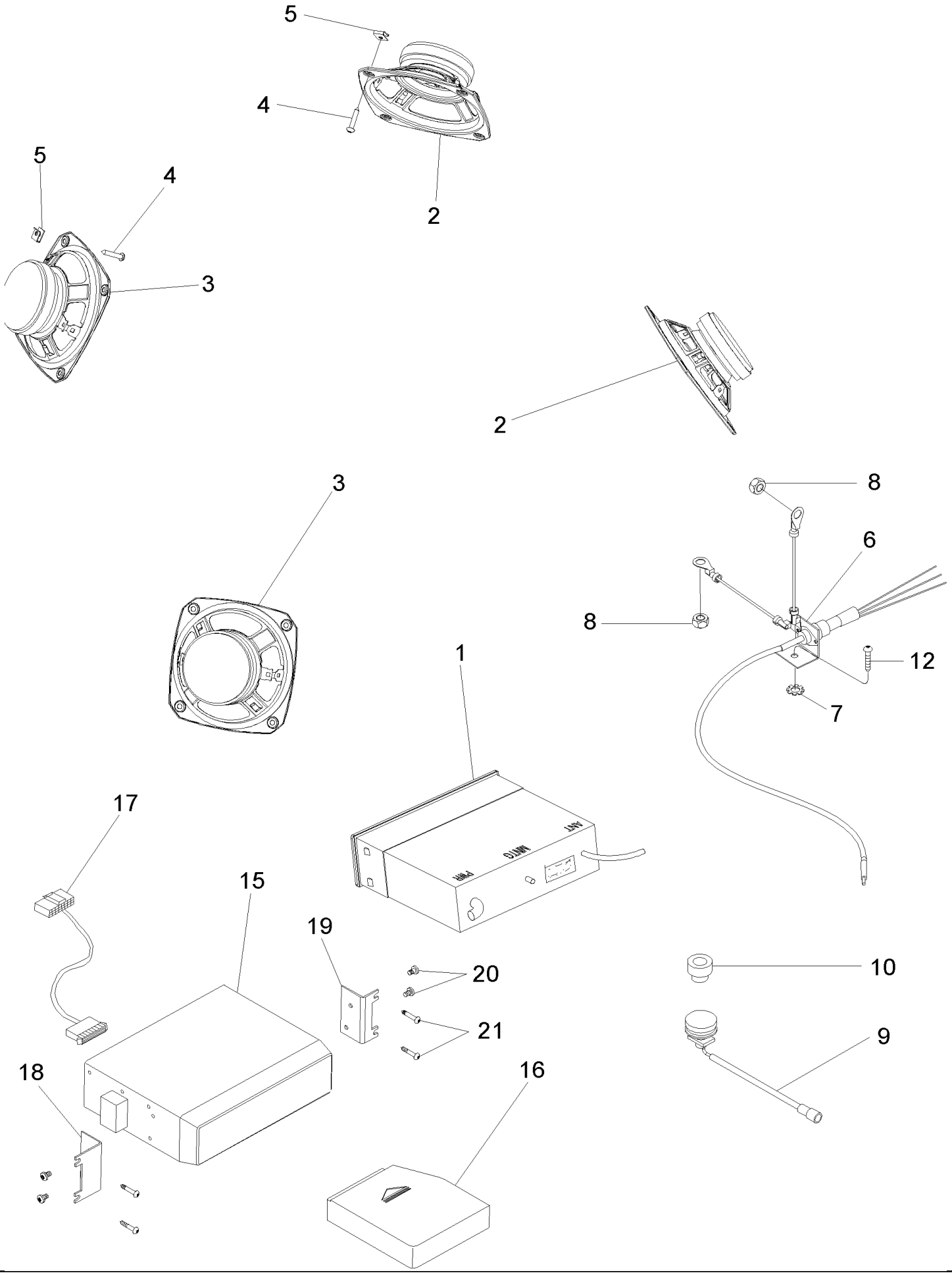
5
4
2
5
4
3
2
3
8
6
8
12
7
1
PWR
MUTE
ANT
17
15
19
20
21
10
9
18
16

MX285 CASE IH MAGNUM TRACTOR (NORTH AMERICA)

04-33 RADIOS, SPEAKERS AND ANTENNAS

ссылка	Номер детали	Кол-во	Описание
1	366631A2	1	RADIO, AM/FM/WB, If Equipped
1	355623A2	1	RADIO, AM/FM Stereo, With Cassette Tape Player, If Equipped
1	325061A2	1	RADIO, AM/FM/WB, With Cassette Tape, CD Changer Ready
2	258342A2	2	SPEAKER, 5-1/4 in Coaxial
3	258343A2	2	SPEAKER, 5-1/4 in Woofer
4	760-17316	16	SCREW, SELF TAP, Pan Hd, M4.2 x 16, M4,2 x 16
5	177269A1	16	NUT,
6	409426A3	1	ANTENNA, 3-Wire
7	893-11008	1	WASHER, LOCK, Ext Tooth, M8, M8, Antenna Bracket
8	829-1408	2	NUT, M8, Cl 10, M8; 10, Ground Wire
9	404694A2	1	CABLE, B/B Radio Antenna, If Equipped
10	182045A1	1	GROMMET,
11	177269A1	8	NUT, Used With 9, Not Illustrated
12	761-17325	8	SCREW, SELF TAP, Pan Hd, M4.2 x 25, M4,2 x 25, Used With 9, Not Illustrated
15	317688A1	1	PLAYER, COMPACT DISC, 6-Disc, Inc, 16
16	317691A1	1	BOX,
17	303433A1	1	HARNESS, CD Player to Radio
18	355299A2	1	BRACKET, Left Hand
19	355298A2	1	BRACKET, Right Hand
20	543-702	4	SCREW, Phil Flat Hd, M5 x 10, 4.8, M5 x 10
21	761-17325	4	SCREW, SELF TAP, Pan Hd, M4.2 x 25, M4,2 x 25

MX285 CASE IH MAGNUM TRACTOR (NORTH AMERICA)

04-34 GROUND SPEED SENSOR

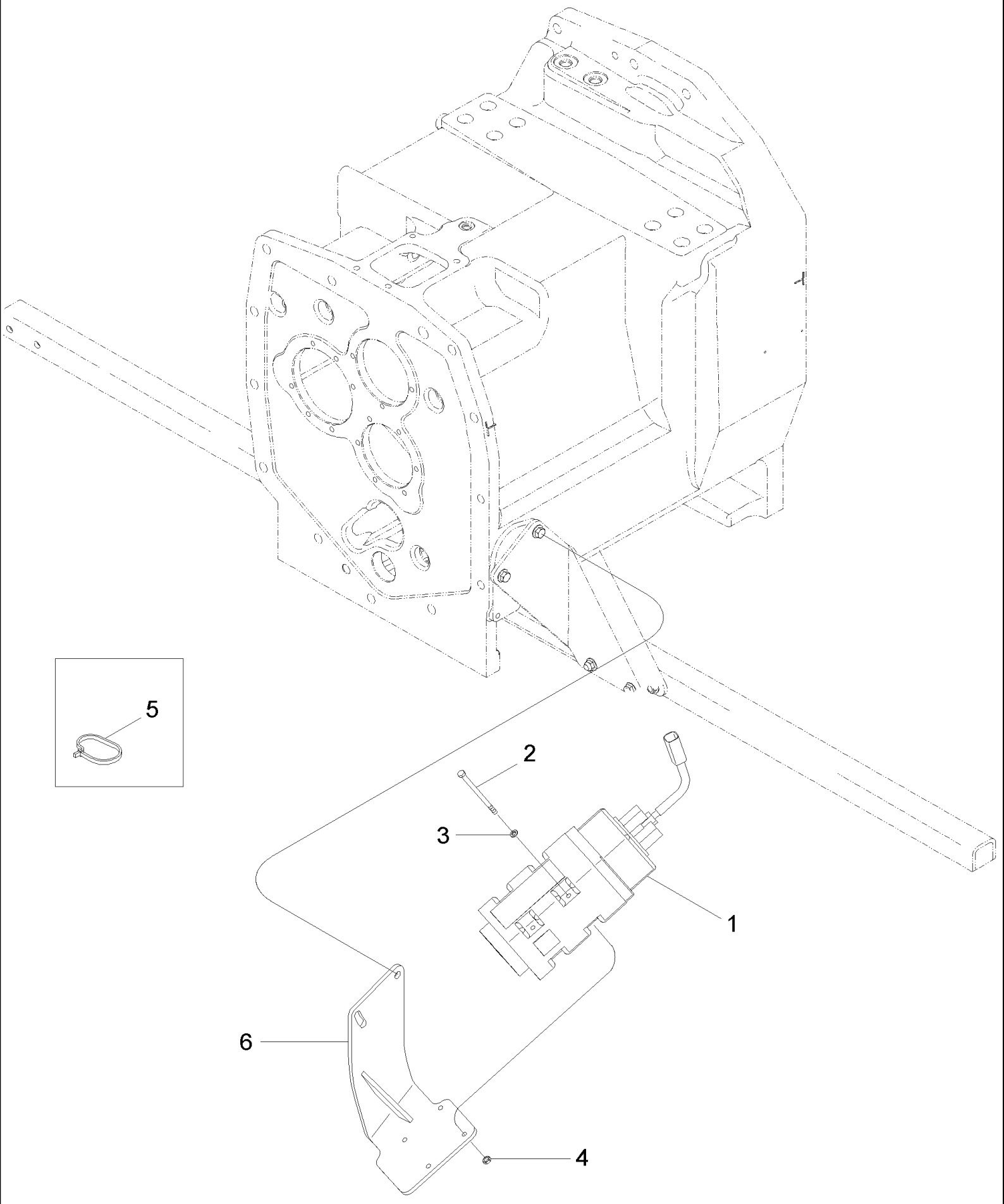

MX285 CASE IH MAGNUM TRACTOR (NORTH AMERICA)

04-34 GROUND SPEED SENSOR

ссылка	Номер детали	Кол-во	Описание
1	228760A1	1	RADAR, Sensor, True Ground Speed
2	814-6100	4	BOLT, Hex, M6 x 100, 8.8, M6 x 100
3	895-11006	4	WASHER, M6, 6,6 x 12 x 1,6 mm
4	825-5146	4	NUT, M6, Flg Ser,
5	L18337	1	STRAP, CABLE, 9.95"-12.1" lg, 15 in
6	412360A1	1	SUPPORT,

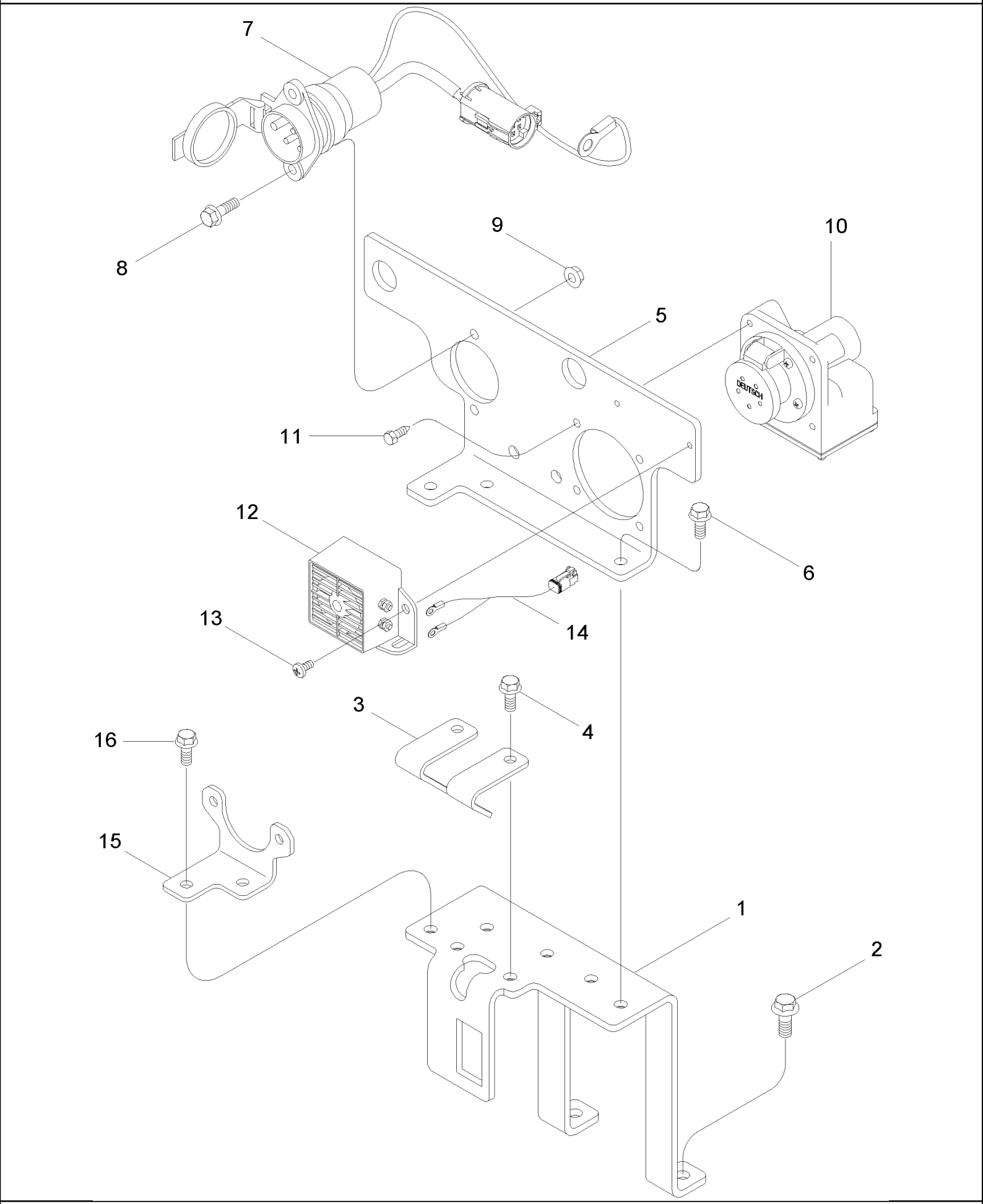
7
8
9
10
5
11
12
6
13
14
3
4
16
15
1
2
DEUTSCH

MX285 CASE IH MAGNUM TRACTOR (NORTH AMERICA)

04-35 IMPLEMENT CONNECTORS AND MOUNTING

ссылка	Номер детали	Кол-во	Описание
1	297873A3	1	SUPPORT,
2	844-10025	2	BOLT, Hex Flg, M10 x 25, 8.8, Full Thd, M10 x 25; 8.8
3	297767A1	1	SUPPORT,
4	844-8020	2	BOLT, Hex Flg, M8 x 20, 8.8,
5	87413002	1	BRACKET, SUPPORTING,
6	844-8020	3	BOLT, Hex Flg, M8 x 20, 8.8,
7	402431A2	1	ADAPTER, 7 Pin
8	844-8025	2	BOLT, Hex Flg, M8 x 25, 8.8, M8 x 25; 8.8
9	825-2408	2	NUT, M8 x 1.25, Flg, Cl 8,
10	323597A1	1	CONNECTOR, ELEC, Implement
11	779-14619	4	SCREW, SELF TAP, Hex Hd, M6.3 x 19, M6.3 x 19
12	109511A1	1	ALARM, Backup Alarm
13	840-1612	2	SCREW, Cross Pan Hd, M6 x 12, M6 x 12; 4.8
14	87403848	1	HARNESS, Backup Alarm
15	86990278	1	SUPPORT, With 7 Pin Connector Only
16	844-8020	2	BOLT, Hex Flg, M8 x 20, 8.8,

MX285 CASE IH MAGNUM TRACTOR (NORTH AMERICA)

04-36 ISO 11783 HARNESS AND MONITOR

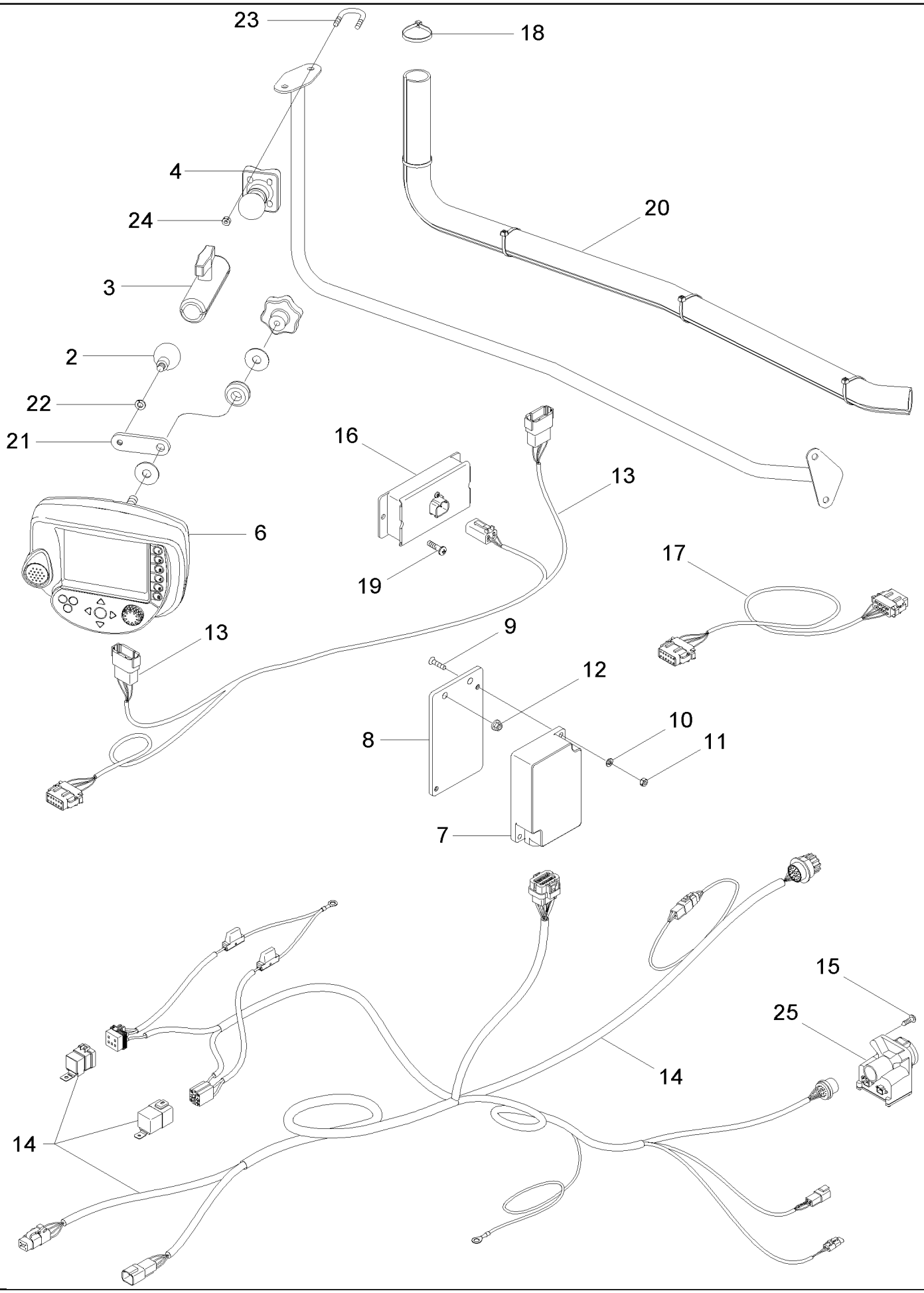

MX285 CASE IH MAGNUM TRACTOR (NORTH AMERICA)

04-36 ISO 11783 HARNESS AND MONITOR

ссылка	Номер детали	Кол-во	Описание
	87433368	1	HOLDER, Assembly, Monitor Inc. 2 - 4
2	87432348	1	RAM BOTTOM,
3	408863A1	1	RAM BOTTOM,
4	408865A1	1	RAM FOOT,
6	87447844	1	MONITOR, CONTROL, With Software
7	416591A1	1	MODULE, Without Software
8	87406980	1	PLATE, Mounting
9	843-2625	2	SCREW, Phil Flat Hd, M6 x 25, 4.8, M6 x 25
10	892-11006	2	WASHER, LOCK, M6, 6 mm
11	829-1406	2	NUT, M6, Cl 10, M6
12	825-2408	2	NUT, M8 x 1.25, Flg, Cl 8,
13	87418143	1	HARNESS, Inside Cab
14	87419306	1	HARNESS, Outside Cab
15	780-14625	4	SCREW, SELF TAP, Hex Hd, M6.3 x 25, M6,3 st x 25
16	284638A2	1	CONNECTOR, ELEC, Active Terminator
17	87435691	1	HARNESS, Monitor Jumper
18	L11541	5	STRAP,
19	760-14416	2	SCREW, SELF TAP, Pan Hd, M4.8 x 16, M4,8 x 16
20	87435704	1	CONDUIT,
21	87432354	1	BRACKET,
22	140045	1	WASHER, SPRING, Belleville, M10,
23	19-6258	2	U-BOLT,
24	425-104	4	NUT, 1/4"-20, G5,
25	87418273	1	CONNECTOR, ELEC,
26	87437728	1	HARNESS, WIRE, VT Jumper (Not Shown), With Accuguide, See Figure 04-40

MX285 CASE IH MAGNUM TRACTOR (NORTH AMERICA)

04-37 MONITOR - ACCUGUIDE

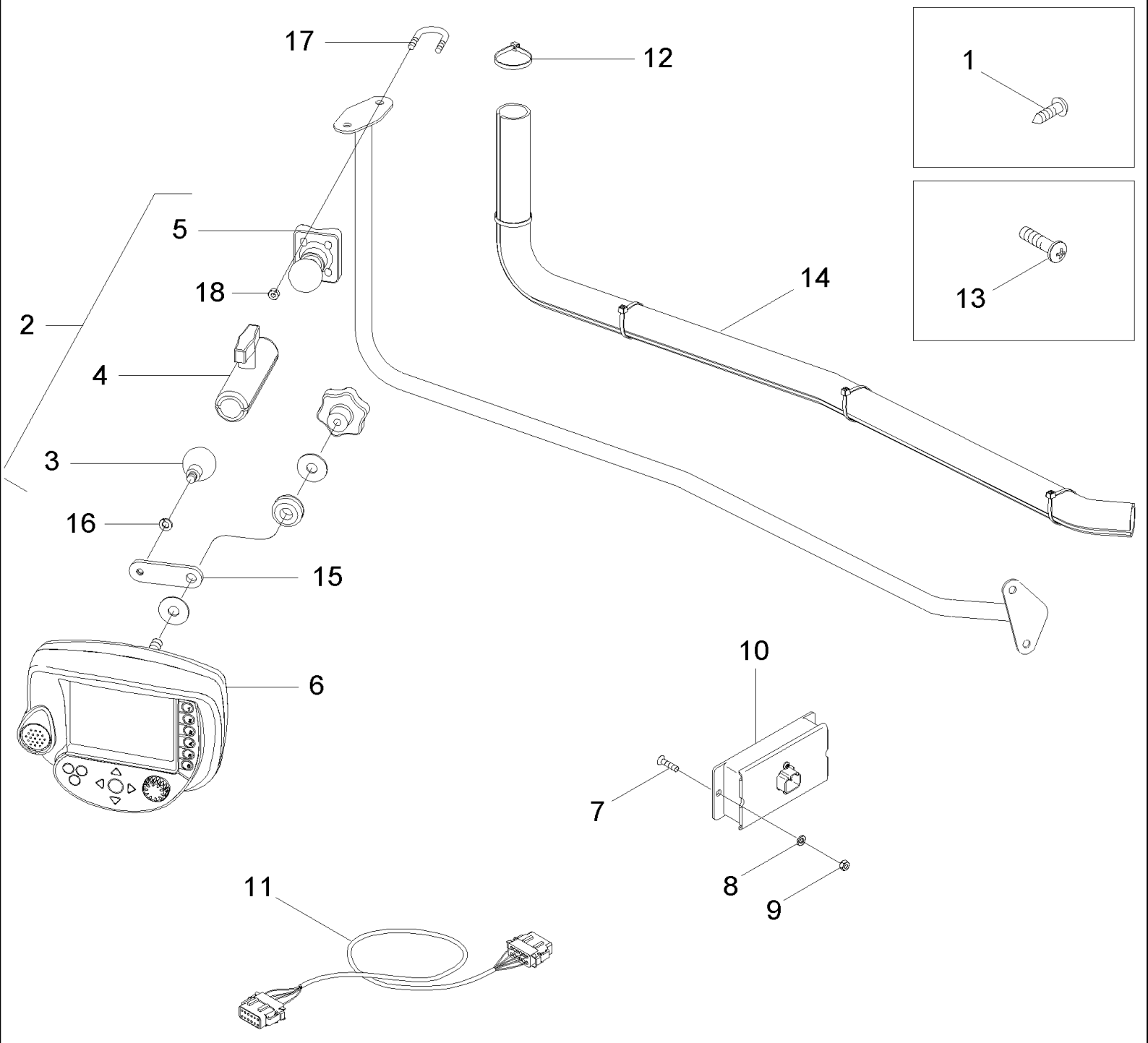

MX285 CASE IH MAGNUM TRACTOR (NORTH AMERICA)

04-37 MONITOR - ACCUGUIDE

ссылка	Номер детали	Кол-во	Описание
1	780-14625	4	SCREW, SELF TAP, Hex Hd, M6.3 x 25, M6.3 x 25
2	87433368	1	HOLDER, Inc. 3 - 5
3	87432348	1	RAM BOTTOM,
4	408863A1	1	RAM BOTTOM,
5	408865A1	1	RAM FOOT,
6	87408091	1	MONITOR, CONTROL, With Software
7	843-2625	2	SCREW, Phil Flat Hd, M6 x 25, 4.8, M6 x 25; 4,8
8	892-11006	2	WASHER, LOCK, M6, M6
9	829-1406	2	NUT, M6, Cl 10, M6
10	284638A2	2	CONNECTOR, ELEC, Active Terminator
11	87435691	1	HARNESS, Jumper
12	L11541	5	STRAP,
13	760-14416	2	SCREW, SELF TAP, Pan Hd, M4.8 x 16, M4.8 x 16
14	87435704	1	CONDUIT,
15	87432354	1	BRACKET,
16	140045	1	WASHER, SPRING, Belleville, M10,
17	19-6258	2	U-BOLT,
18	425-104	4	NUT, 1/4"-20, G5,

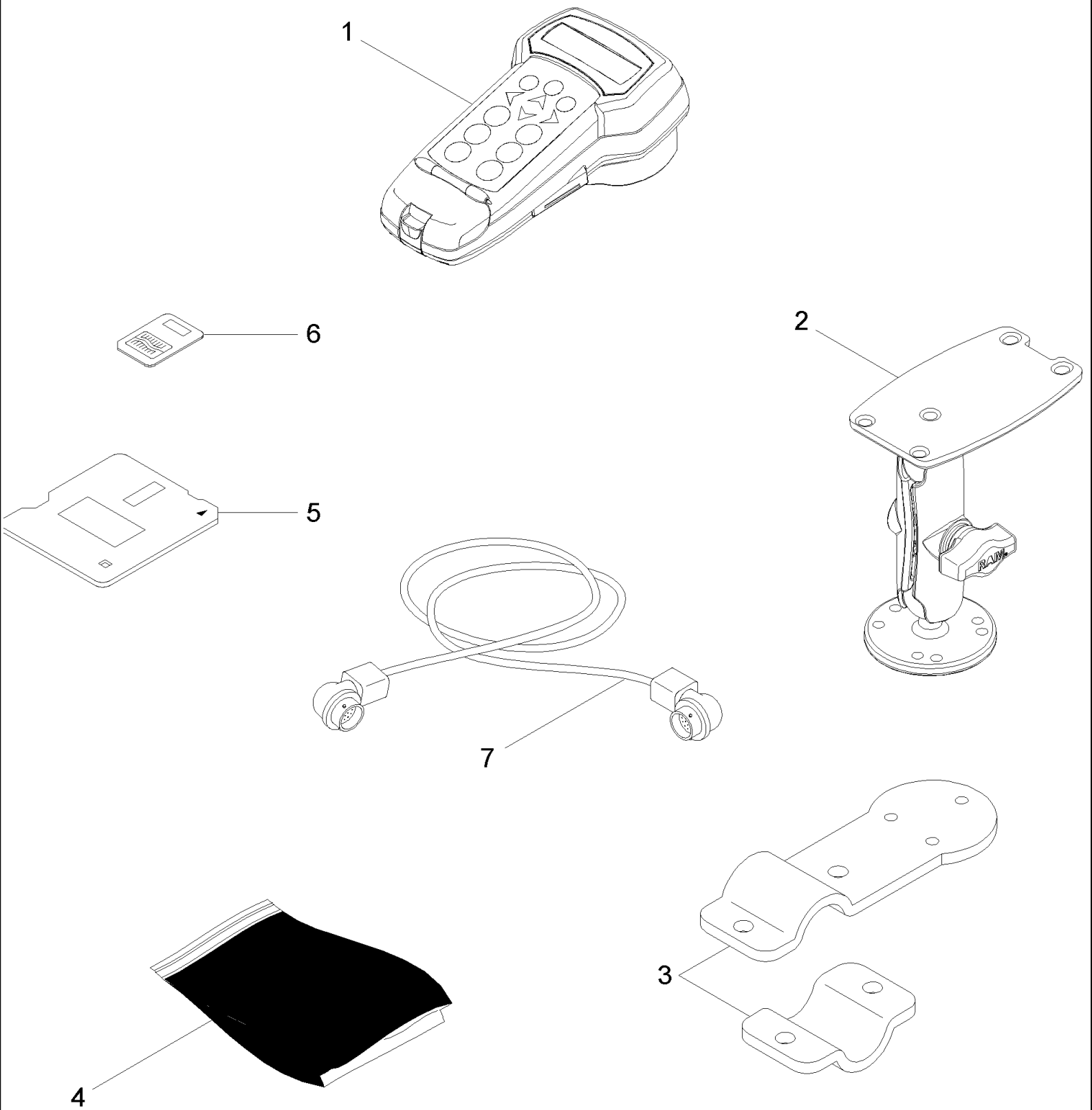
1
2
3
4
5
6
7

MX285 CASE IH MAGNUM TRACTOR (NORTH AMERICA)

04-38 REMOTE DATA LOGGER

ссылка	Номер детали	Кол-во	Описание
1	87428366	1	MODULE,
2	87428367	1	BRACKET,
3	87428368	1	ADAPTER,
4	87428369	1	SET, Bolts
5	87428371	1	ADAPTER,
6	87428375	1	MODULE, Compact Flash 16MB
7	87428378	1	CABLE ASSY.,

MX285 CASE IH MAGNUM TRACTOR (NORTH AMERICA)

04-39 ACCUGUIDE CONTROL MODULE AND MOUNTING

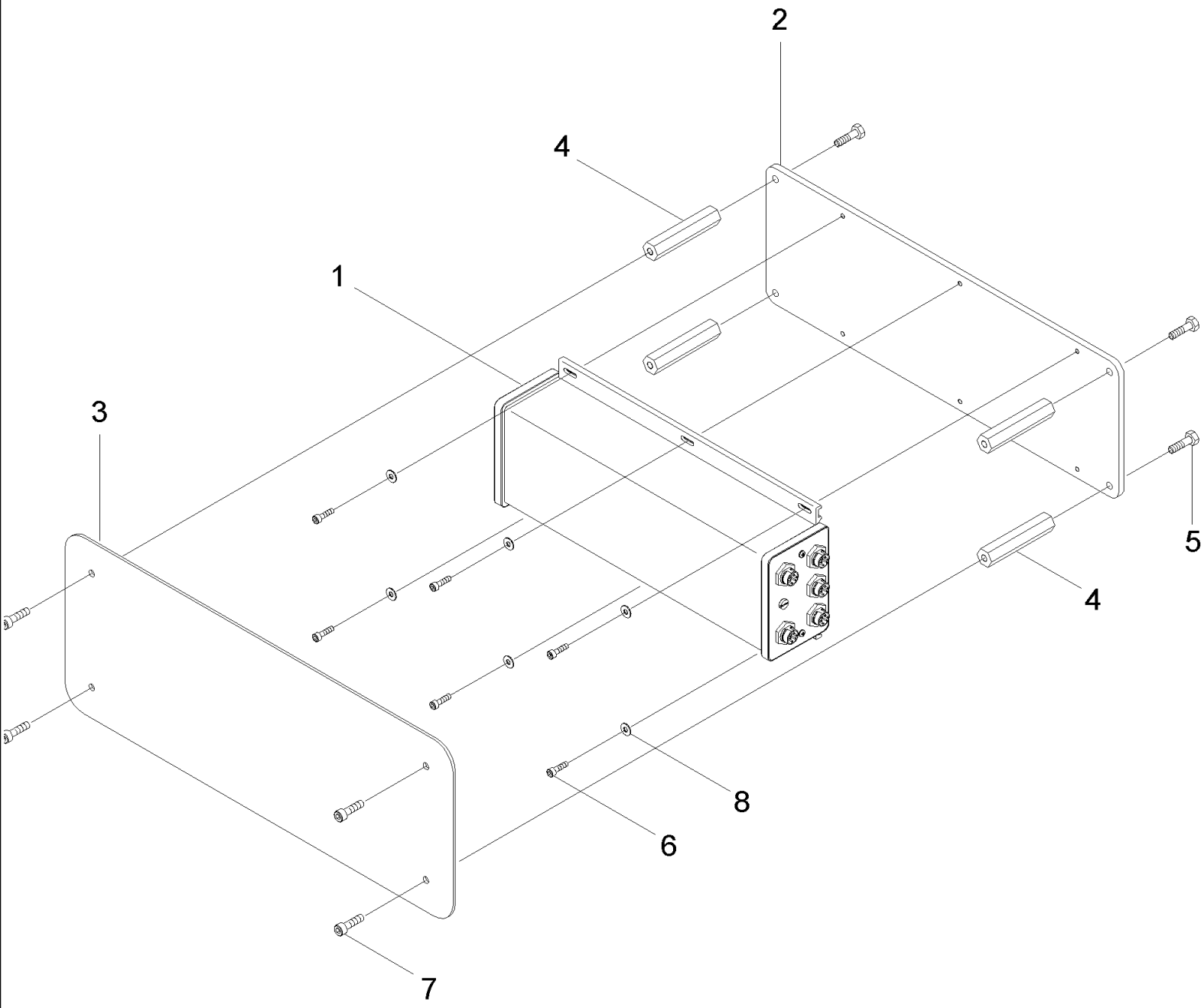

MX285 CASE IH MAGNUM TRACTOR (NORTH AMERICA)

04-39 ACCUGUIDE CONTROL MODULE AND MOUNTING

ссылка	Номер детали	Кол-во	Описание
1	87428425	1	MODULE, Accuguide
2	87423193	1	PLATE, Mounting
3	87423194	1	COVER,
4	87423195	4	SPACER,
5	614-6020	4	BOLT, Hex, M6 x 20, 8.8, M6 x 20; 8,8
6	864-4012	6	SCREW, Hex Soc Hd, M4 x 12, 8.8, M4 x 12; 8,8
7	565-104	4	SCREW, Hex Soc Hd, M6 x 20, 8.8, M6 20; 8,8
8	895-11006	6	WASHER, M6, 6,6 x 12,5 x 1,6 mm

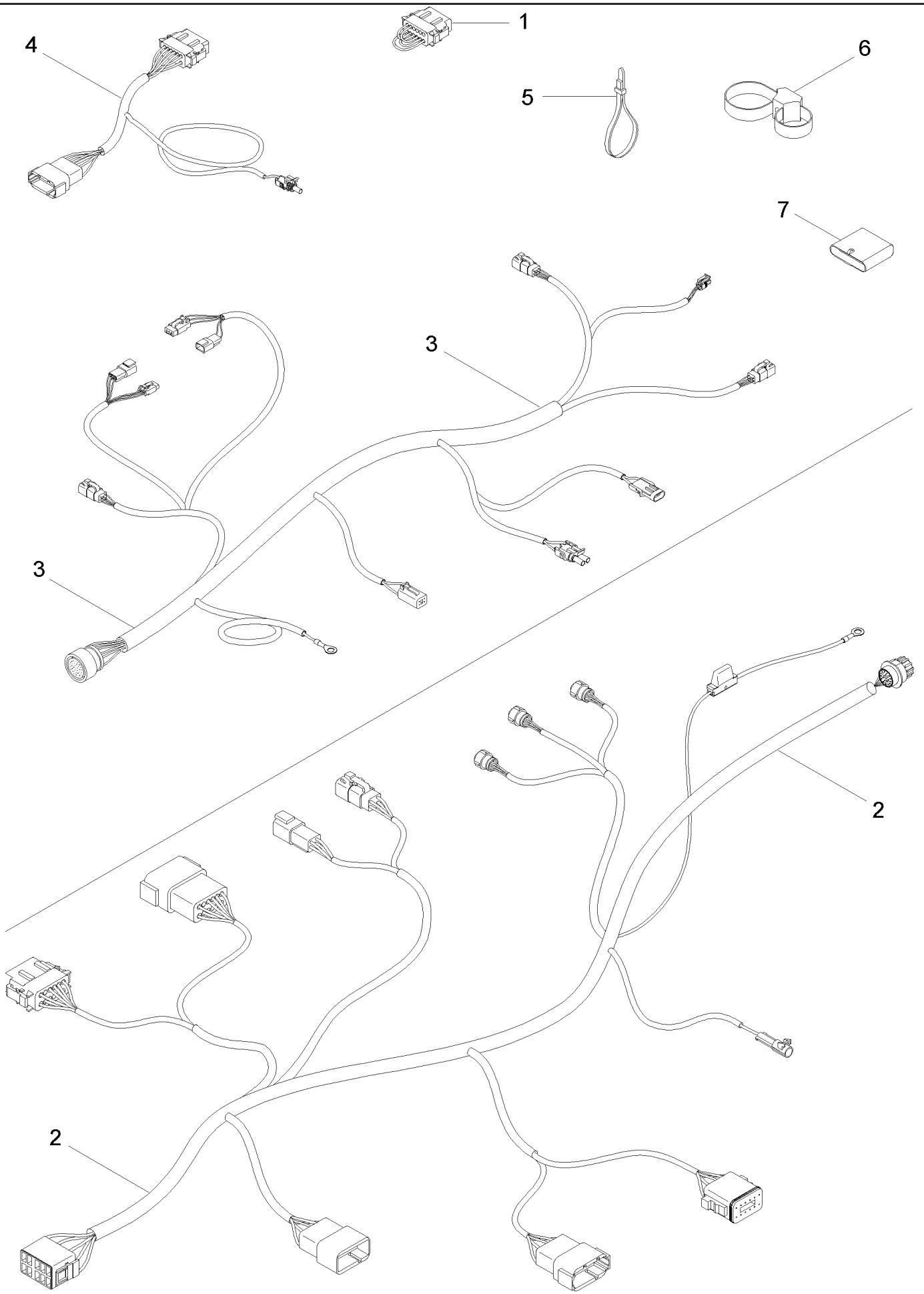
1
4
6
5
7
3
3
2
2

MX285 CASE IH MAGNUM TRACTOR (NORTH AMERICA)

04-40 ACCUGUIDE HARNESSES

ссылка	Номер детали	Кол-во	Описание
1	87437728	1	HARNESS, WIRE, VT Jumper
2	87442660	1	HARNESS, WIRE, Inside Cab
3	87437178	1	HARNESS, WIRE, Outside Cab
4	87437842	1	HARNESS, WIRE, Adapter
5	86991009	9	STRAP, CABLE,
6	86991000	1	CLAMP,
7	87438413	1	HARNESS, WIRE,

MX285 CASE IH MAGNUM TRACTOR (NORTH AMERICA)

04-41 ACCUGUIDE RADIO AND ANTENNA

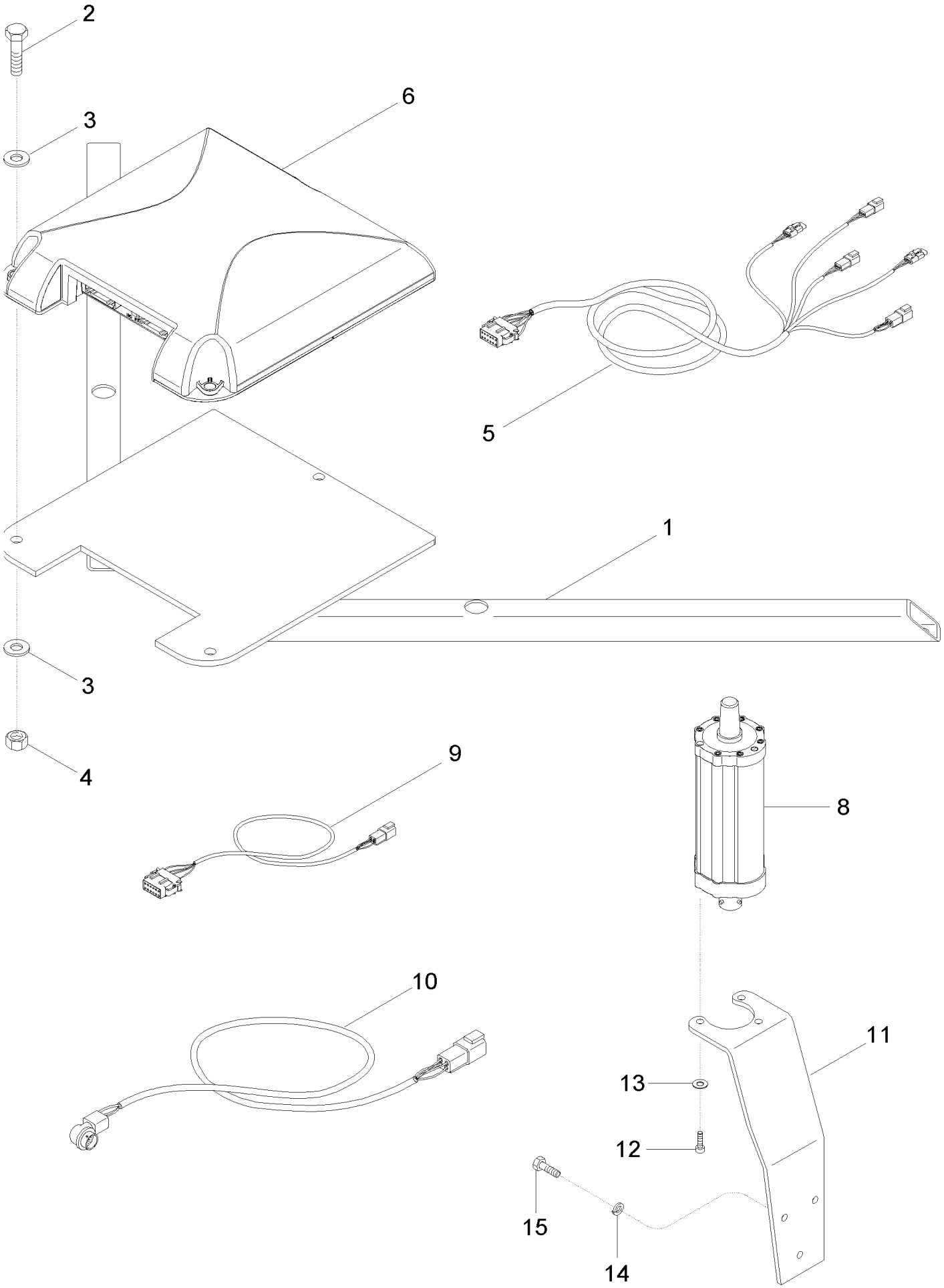

MX285 CASE IH MAGNUM TRACTOR (NORTH AMERICA)

04-41 ACCUGUIDE RADIO AND ANTENNA

сылка	Номер детали	Кол-во	Описание
1	87428506	1	BRACKET, Antenna
2	614-10030	3	BOLT, Hex, M10 x 30, 8.8,
3	895-11010	6	WASHER, M10 x 20 x 2, 11 x 21 x 2 mm
4	832-10410	3	NUT, LOCK, M10 x 1.5, Cl 8,
5	87428217	1	HARNESS, WIRE, Antenna
6	87449980	1	MODULE, Receiver, DGPS
6	87449982	1	MODULE, Receiver, RTK
8	87428519	1	RADIO, North America Only
8	87443827	1	RADIO, Austrailia And New Zealand Only
9	87441808	1	CABLE ASSY.,
10	87441809	1	CABLE ASSY.,
11	87428393	1	BRACKET,
12	414-58	3	BOLT, Hex, 5/16"-24 x 1/2", G5, Full Thd, 5/16 NF x 1/2
13	895-11008	3	WASHER, M8 x 16 x 1.6, 9 x 16 x 1,6 mm
14	892-11008	3	WASHER, LOCK, M8, Lock, M8
15	614-8025	3	BOLT, Hex, M8 x 25, 8.8, Without Mirrors
15	614-8035	3	BOLT, Hex, M8 x 35, 8.8, M8 x 35; 8,8, with Mirrors

MX285 CASE IH MAGNUM TRACTOR (NORTH AMERICA)

04-42 ACCUGUIDE BASE STATION

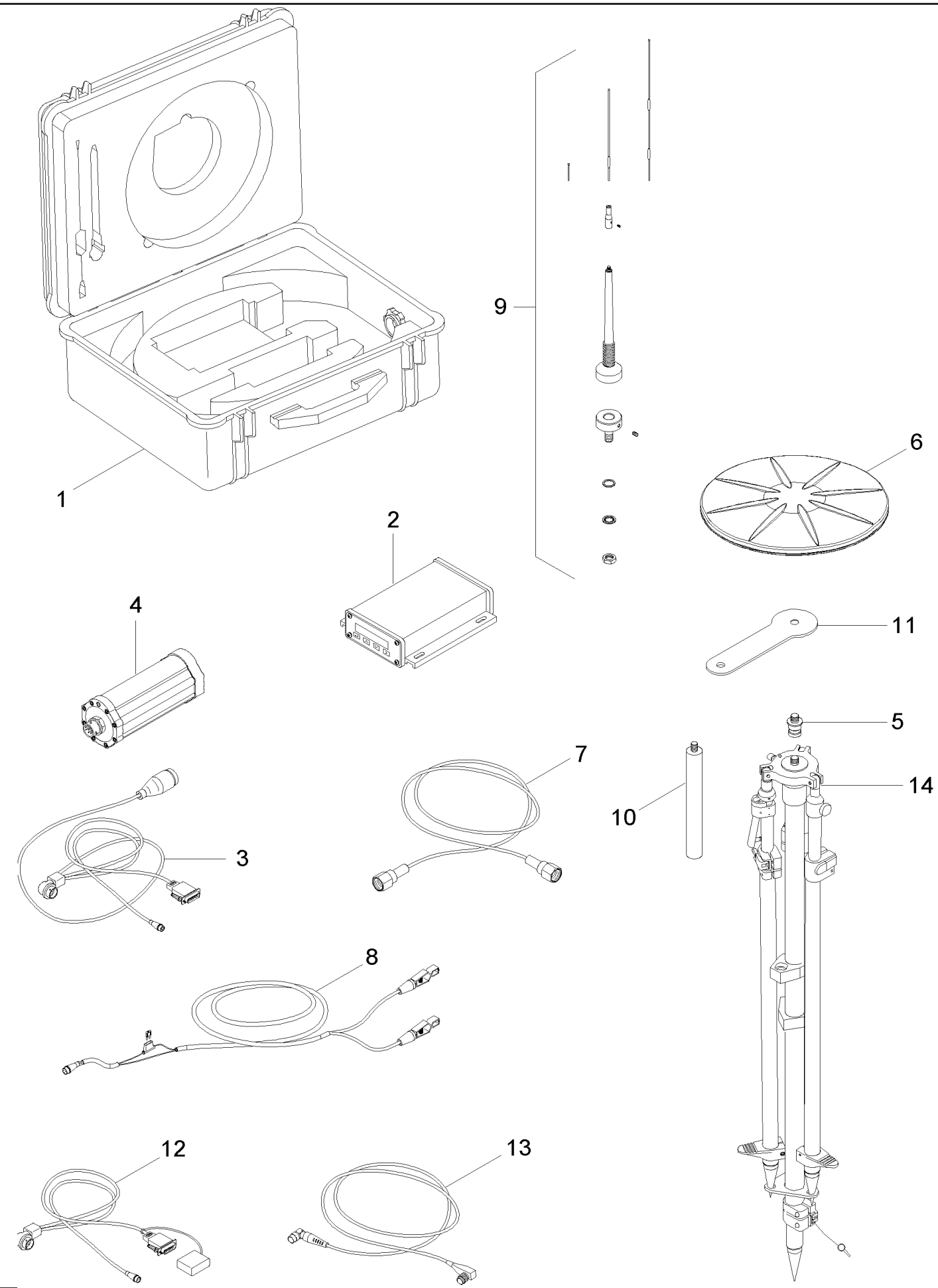

MX285 CASE IH MAGNUM TRACTOR (NORTH AMERICA)

04-42 ACCUGUIDE BASE STATION

сылка	Номер детали	Кол-во	Описание
1	87428190	1	CASE,
2	87428192	1	RADIO,
3	87428193	1	CABLE,
4	87428194	1	RADIO, North America Only
4	87444733	1	RADIO, Austrailia And New Zealand Only
5	87428195	1	ADAPTER,
6	87428196	1	ANTENNA,
7	87428197	1	CABLE,
8	87428198	1	CABLE ASSY.,
9	87428199	1	ANTENNA,
10	87450292	1	POLE,
11	87428201	1	BRACKET,
12	87428202	1	CABLE,
13	87428203	1	CABLE ASSY.,
14	87428208	1	TRIPOD,

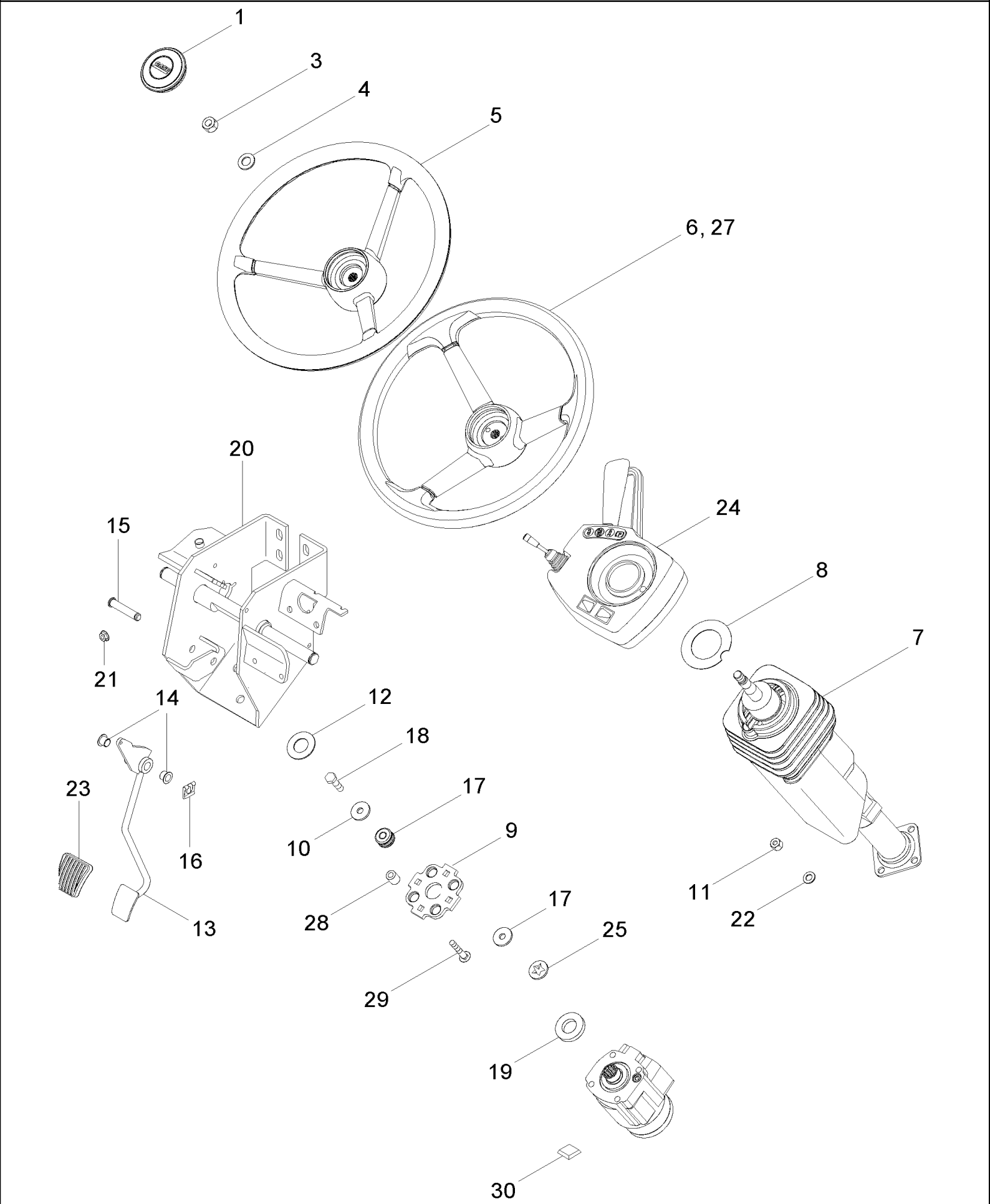
1
3
4
5
6, 27
20
15
24
8
21
7
14
12
18
23
17
10
9
16
28
17
11
22
13
25
29
19
30

MX285 CASE IH MAGNUM TRACTOR (NORTH AMERICA)

05-01 STEERING WHEEL AND COLUMN

ссылка	Номер детали	Кол-во	Описание
1	361024A3	1	CAP,
3	825-11414	1	NUT, M14 x 1.5, Cl 8, M14
4	895-11014	1	WASHER, M14 x 28 x 2.5, 15,5 x 28 x 2,5 mm
5	224818A3	1	STEERING WHEEL, , Standard Cab
6	301200A1	1	WHEEL (STEERING), , Deluxe Cab
7	406697A2	1	STEERING COLUMN, , See Figure 05-02
8	1977448C2	1	WASHER,
9	366073A1	1	PLATE,
10	434177A1	4	MOUNTING, RUBBER,
11	832-10410	4	NUT, LOCK, M10 x 1.5, Cl 8,
12	307559A1	1	SEAL,
13	295191A3	1	PEDAL,
14	1533540C1	2	EYEBOLT,
15	295192A1	1	SHAFT,
16	277059A1	1	CLIP,
17	496-81028	8	WASHER, 13/32" x 1 1/4" x .134", HDN, 13/32 x 1-1/4 x 1/8
18	614-10035	4	SCREW, Hex, M10 x 35, 8.8, Full Thd,
19	296775A2	1	SEAL,
20	401251A4	1	BRACKET,
21	825-2408	4	NUT, M8 x 1.25, Flg, Cl 8,
22	895-11010	4	WASHER, M10 x 20 x 2, 11 x 20 x 2 mm
23	323657A1	1	PAD,
24	86993721	1	CONTROL, , See Figure 06-31
25	329677A1	8	RETAINER,
27	359033A1	1	WHEEL (STEERING), , Luxury Cab
28	295478A1	4	SPACER,
29	370105A2	4	BOLT,
30	P741441	4	SPACER,

MX285 CASE IH MAGNUM TRACTOR (NORTH AMERICA)

05-02 STEERING COLUMN ASSEMBLY

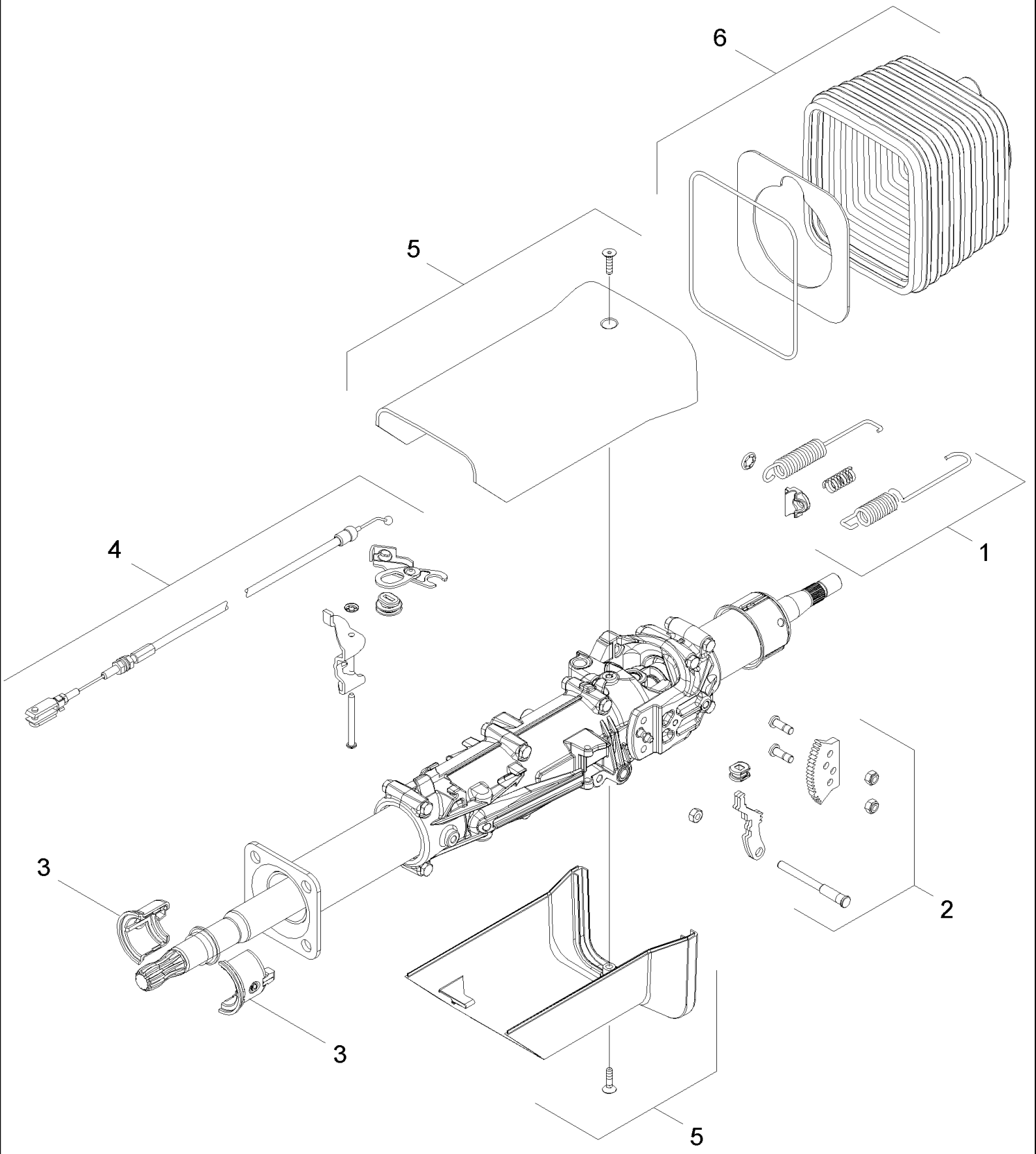

MX285 CASE IH MAGNUM TRACTOR (NORTH AMERICA)

05-02 STEERING COLUMN ASSEMBLY

ссылка	Номер детали	Кол-во	Описание
	406697A2	1	STEERING COLUMN, Inc. 1 - 6
1	87400095	1	KIT, SERVICE, Springs
2	87400096	1	KIT, SERVICE, Tilt Lock
3	318934A1	1	PACKAGE,SERVICE, Bearings
4	87400097	1	KIT, SERVICE, Lever
5	87400098	1	KIT, SERVICE, Cover
6	87400099	1	KIT, SERVICE, Bellows

MX285 CASE IH MAGNUM TRACTOR (NORTH AMERICA)

05-09 STEERING SYSTEM - MFD, BSN JAZ126070

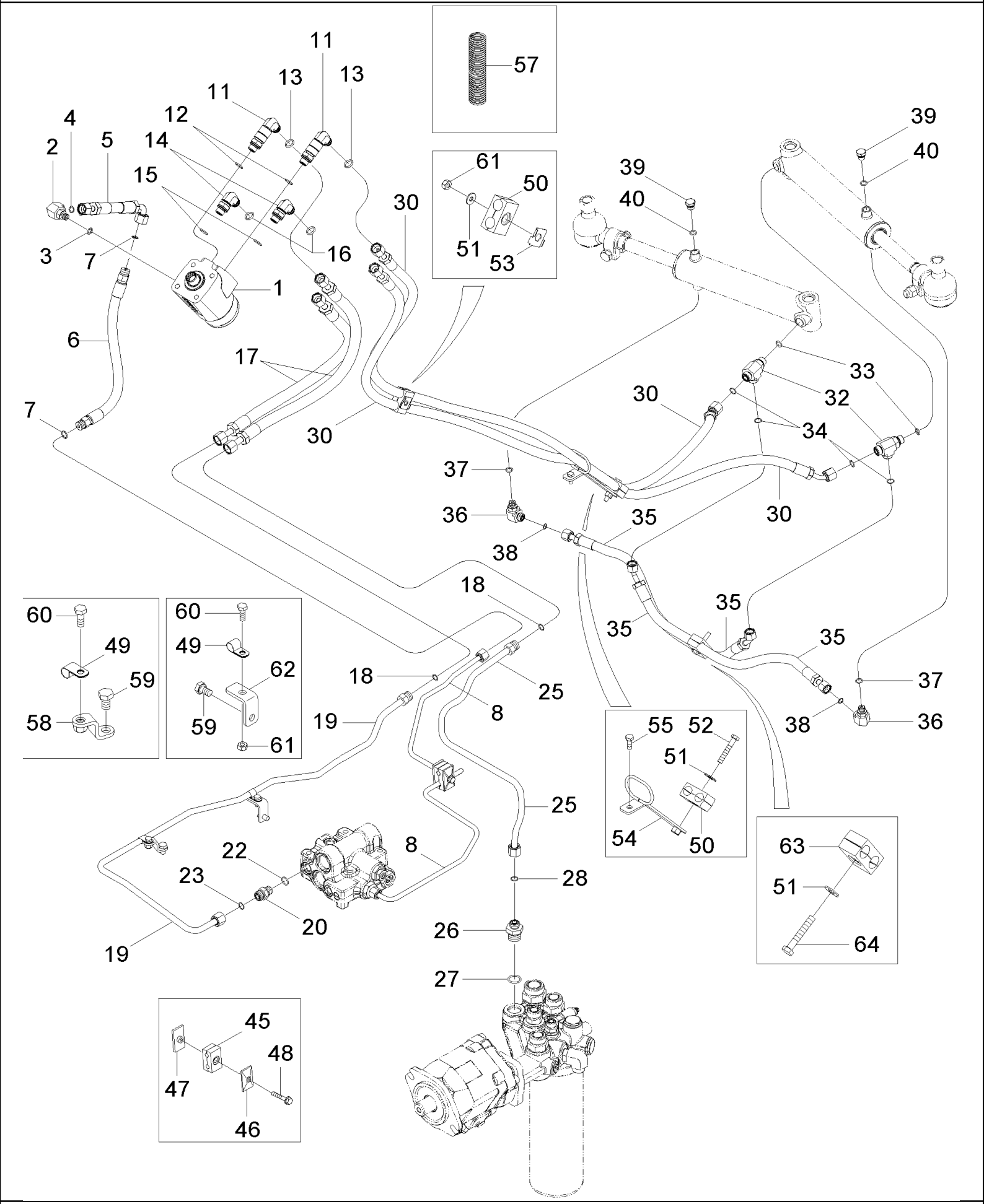

MX285 CASE IH MAGNUM TRACTOR (NORTH AMERICA)

05-09 STEERING SYSTEM - MFD, BSN JAZ126070

ссылка	Номер детали	Кол-во	Описание
1	445303A1	1	PUMP, Steering, With 10 Bolt Hub
	396591A1	1	KIT, Seal, Steering Pump
1	445304A1	1	PUMP, Steering, With 12 Bolt Hub
	396591A1	1	KIT, Seal, Steering Pump
2	700-311	1	ELBOW, 90є, 11/16"-18 ORFS x M12 x 1.5 ORB, 11/16 fc sl x 12 Or, Inc. 3, 4
3	637-63093	1	O-RING, Cl 6, 9.3MM ID x 2.2 Thk, 9,3 ID x 2,2
4	238-6012	1	O-RING, -012, 90 Duro, .364" ID x .070" Thk,
5	308247A1	1	HOSE,
6	308000A1	1	HOSE,
7	238-6012	2	O-RING, -012, 90 Duro, .364" ID x .070" Thk,
8	451056A1	1	TUBE ASSY.,
11	700-381	2	ELBOW, 90є, 13/16"-16 ORFS x M18 x 1.5 ORB, 13/16 fc sl x 18 Or, Inc. 12, 13
12	637-63153	1	O-RING, Cl 6, 15.3MM ID x 2.2 Thk, 15,3 ID x 2,2
13	238-6014	1	O-RING, -014, 90 Duro, .489" ID x .070" Thk,
14	700-305	2	ELBOW, 90є, 13/16"-18 ORFS x M18 x 1.5 ORB, 13/16 fc sl x 18 Or, Inc. 15, 16
15	637-63153	1	O-RING, Cl 6, 15.3MM ID x 2.2 Thk, 15,3 ID x 2,2
16	238-6014	1	O-RING, -014, 90 Duro, .489" ID x .070" Thk,
17	311852A1	2	HOSE,
18	238-6014	2	O-RING, -014, 90 Duro, .489" ID x .070" Thk,
19	433591A1	1	TUBE ASSY.,
20	700-102	1	CONNECTOR, HYD., 13/16"-16 ORFS x M18 x 1.5 ORB, 13/16 fc sl x 18 Or, Inc. 22, 23
22	637-63153	1	O-RING, Cl 6, 15.3MM ID x 2.2 Thk, 15,3 ID x 2,2
23	238-6014	1	O-RING, -014, 90 Duro, .489" ID x .070" Thk,
25	437015A1	1	TUBE ASSY.,
26	86597761	1	CONNECTOR, HYD., 13/16"-16 ORFS x M27 x 2 ORB, 13/16 fc sl x 27 Or, Inc. 27, 28
27	637-64236	1	O-RING, Cl 6, 23.6MM ID x 2.9 Thk, 23,6 ID x 2,9
28	238-6014	1	O-RING, -014, 90 Duro, .489" ID x .070" Thk,
30	419814A2	2	HOSE ASSY.,
32	700-412	2	TEE, 13/16"-16 ORFS x M18 x 1.5 ORB Run, 13/16 fc sl x 18 Or, Inc. 33, 34
33	637-63153	1	O-RING, Cl 6, 15.3MM ID x 2.2 Thk, 15,3 ID x 2,2
34	238-6014	2	O-RING, -014, 90 Duro, .489" ID x .070" Thk,
35	249817A2	2	HOSE,
36	700-304	2	ELBOW, 90є, 11/16"-18 ORFS x M14 x 1.5 ORB, 11/16 fc sl x 14 Or, Inc. 37, 38
37	637-63113	1	O-RING, Cl 6, 11.3MM ID x 2.2 Thk, 11,3 ID x 2,2
38	238-6012	1	O-RING, -012, 90 Duro, .364" ID x .070" Thk,
39	220064A1	2	PLUG, M14 x 1.5, ORB, M14 - 1,5, Inc. 40
40	637-63113	1	O-RING, Cl 6, 11.3MM ID x 2.2 Thk, 11,3 ID x 2,2
45	1546024C1	1	CLAMP, 2 piece
46	384870A1	2	PLATE, 9 x 20 x 1,6 mm
47	384871A1	1	PLATE, M8; 10
48	844-8045	1	BOLT, Hex Flg, M8 x 45, 8.8, M8 x 45; 8.8
49	515-23127	2	CLAMP, 1/2", Insul, 3/8" Bolt, 1/2 ID
50	387161A1	2	CLAMP,
51	895-15008	3	WASHER, M8 x 20 x 1.6, 9 x 20 x 1,6 mm
52	814-8050	1	BOLT, Hex, M8 x 50, 8.8, M8 x 50; 8,8

ссылка	Номер детали	Кол-во	Описание
53	448560A1	1	PLATE, RETAINING,
54	403534A1	1	BRACKET,
55	614-8020	1	BOLT, Hex, M8 x 20, 8.8, M8 x 20; 8.8
56	408411A1	3	CONDUIT,
57	408412A1	2	CONDUIT,
58	86988840	1	BRACKET,
59	614-10016	2	BOLT, Hex, M10 x 16, 8.8, Full Thd, M10 x 16
60	614-8020	2	BOLT, Hex, M8 x 20, 8.8, M8 x 20; 8.8
61	832-10408	1	NUT, M8 x 1.25, Cl 8, Lock, M8; 8
62	86988838	1	BRACKET,
63	387161A1	1	CLAMP,
64	814-8050	1	BOLT, Hex, M8 x 50, 8.8, M8 x 50; 8,8

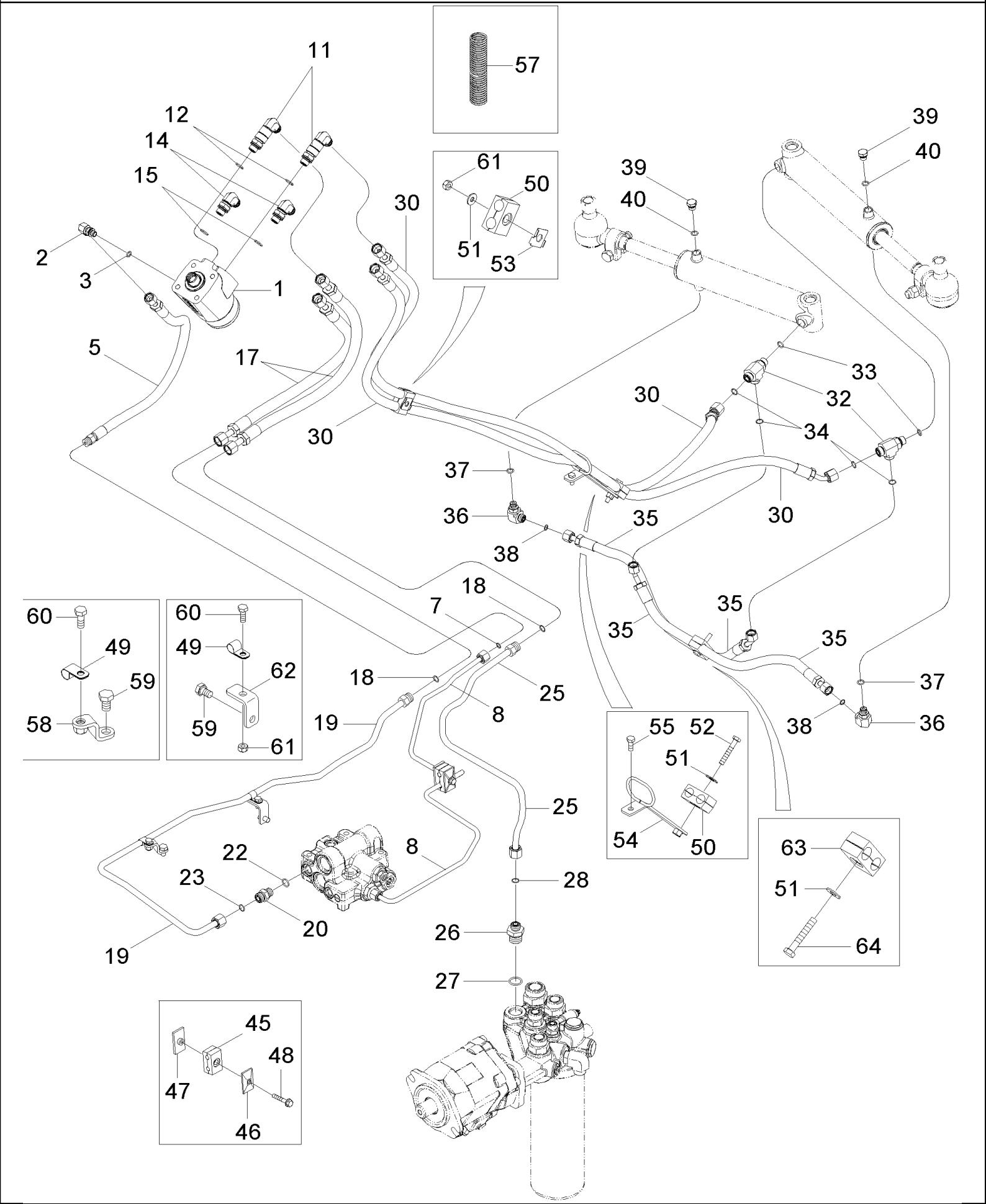
57
11
12
14
15
61
50
51
53
30
39
40
2
3
1
5
17
33
32
34
37
36
38
35
18
7
60
49
59
58
62
61
25
8
19
55
52
54
63
64
22
23
20
28
26
27
45
48
47
46

MX285 CASE IH MAGNUM TRACTOR (NORTH AMERICA)

05-10 STEERING SYSTEM - MFD, ASN JAZ126070

ссылка	Номер детали	Кол-во	Описание
1	445303A1	1	PUMP, Steering, With 10 Bolt Hub
	396591A1	1	KIT, Seal, Steering Pump
1	445304A1	1	PUMP, Steering, With 12 Bolt Hub
	396591A1	1	KIT, Seal, Steering Pump
2	87401122	1	ELBOW, 11/16 fc sl x 12 Or, Inc. 3
3	637-63093	1	O-RING, Cl 6, 9.3MM ID x 2.2 Thk, 9,3 ID x 2,2
5	87401120	1	HOSE,
7	238-6012	1	O-RING, -012, 90 Duro, .364" ID x .070" Thk,
8	451056A1	1	TUBE ASSY., , BSN AJB0355338
8	87440642	1	TUBE ASSY., , ASN AJB0355338
11	87401124	2	ELBOW, 13/16 fc sl x 18 Or, Inc. 12
12	637-63153	1	O-RING, Cl 6, 15.3MM ID x 2.2 Thk, 15,3 ID x 2,2
14	87401123	2	ELBOW, 13/16 fc sl x 18 Or, Inc. 15
15	637-63153	1	O-RING, Cl 6, 15.3MM ID x 2.2 Thk, 15,3 ID x 2,2
17	87401117	2	HOSE,
18	238-6014	2	O-RING, -014, 90 Duro, .489" ID x .070" Thk,
19	433591A1	1	TUBE ASSY.,
20	700-102	1	CONNECTOR, HYD., 13/16"-16 ORFS x M18 x 1.5 ORB, 13/16 fc sl x 18 Or, Inc. 22, 23
22	637-63153	1	O-RING, Cl 6, 15.3MM ID x 2.2 Thk, 15,3 ID x 2,2
23	238-6014	1	O-RING, -014, 90 Duro, .489" ID x .070" Thk,
25	437015A1	1	TUBE ASSY., , BSN AJB0355338
25	87449707	1	TUBE ASSY., , ASN AJB0355338
26	86597761	1	CONNECTOR, HYD., 13/16"-16 ORFS x M27 x 2 ORB, 13/16 fc sl x 27 Or, Inc. 27, 28
27	637-64236	1	O-RING, Cl 6, 23.6MM ID x 2.9 Thk, 23,6 ID x 2,9
28	238-6014	1	O-RING, -014, 90 Duro, .489" ID x .070" Thk,
30	87401118	2	HOSE ASSY.,
32	700-412	2	TEE, 13/16"-16 ORFS x M18 x 1.5 ORB Run, 13/16 fc sl x 18 Or, Inc. 33, 34
33	637-63153	1	O-RING, Cl 6, 15.3MM ID x 2.2 Thk, 15,3 ID x 2,2
34	238-6014	2	O-RING, -014, 90 Duro, .489" ID x .070" Thk,
35	249817A2	2	HOSE,
36	700-304	2	ELBOW, 90є, 11/16"-18 ORFS x M14 x 1.5 ORB, 11/16 fc sl x 14 Or, Inc. 37, 38
37	637-63113	1	O-RING, Cl 6, 11.3MM ID x 2.2 Thk, 11,3 ID x 2,2
38	238-6012	1	O-RING, -012, 90 Duro, .364" ID x .070" Thk,
39	220064A1	2	PLUG, M14 x 1.5, ORB, M14 - 1,5, Inc. 40
40	637-63113	1	O-RING, Cl 6, 11.3MM ID x 2.2 Thk, 11,3 ID x 2,2
45	1546024C1	1	CLAMP, 2 piece
46	384870A1	2	PLATE, 9 x 20 x 1,6 mm
47	384871A1	1	PLATE, M8; 10
48	844-8045	1	BOLT, Hex Flg, M8 x 45, 8.8, M8 x 45; 8.8
49	515-23127	2	CLAMP, 1/2", Insul, 3/8" Bolt, 1/2 ID
50	387161A1	2	CLAMP,
51	895-15008	3	WASHER, M8 x 20 x 1.6, 9 x 20 x 1,6 mm
52	814-8050	1	BOLT, Hex, M8 x 50, 8.8, M8 x 50; 8,8
53	448560A1	1	PLATE, RETAINING,
54	403534A1	1	BRACKET,

ссылка	Номер детали	Кол-во	Описание
55	614-8020	1	BOLT, Hex, M8 x 20, 8.8, M8 x 20; 8.8
56	408411A1	3	CONDUIT,
57	408412A1	2	CONDUIT,
58	86988840	1	BRACKET,
59	614-10016	2	BOLT, Hex, M10 x 16, 8.8, Full Thd, M10 x 16
60	614-8020	2	BOLT, Hex, M8 x 20, 8.8, M8 x 20; 8.8
61	832-10408	1	NUT, M8 x 1.25, Cl 8, Lock, M8; 8
62	86988838	1	BRACKET,
63	387161A1	1	CLAMP, , BSN JAZ128233
63	118576A1	1	CLAMP, , ASN JAZ128233
64	814-8050	1	BOLT, Hex, M8 x 50, 8.8, M8 x 50; 8,8, BSN JAZ128233
64	814-8055	1	BOLT, Hex, M8 x 55, 8.8, M8 x 55; 8,8, ASN JAZ128233

MX285 CASE IH MAGNUM TRACTOR (NORTH AMERICA)

05-11 STEERING SYSTEM - MFD WITH ACCUGUIDE

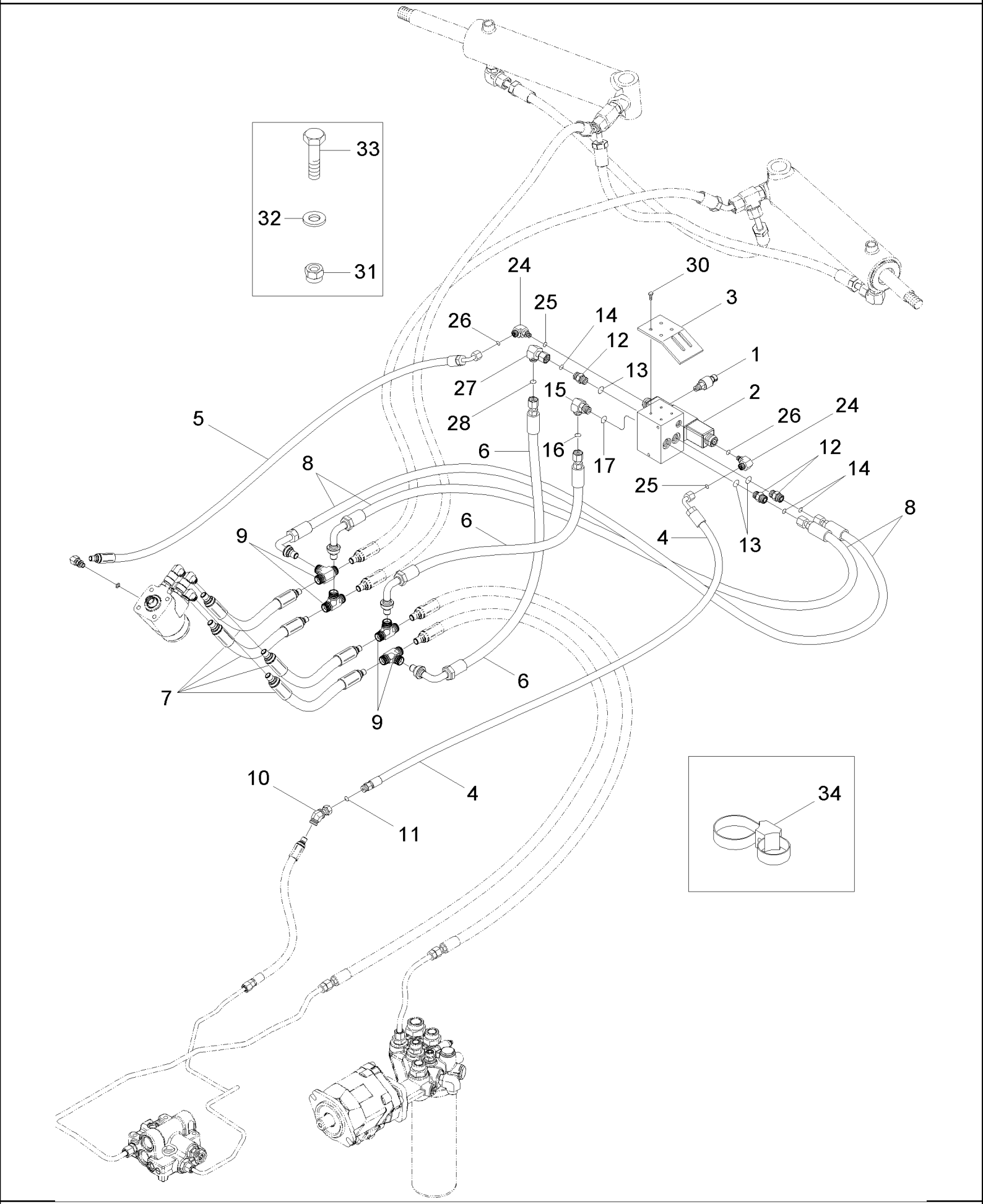

MX285 CASE IH MAGNUM TRACTOR (NORTH AMERICA)

05-11 STEERING SYSTEM - MFD WITH ACCUGUIDE

ссылка	Номер детали	Кол-во	Описание
1	87428328	1	SENSOR,
2	87440890	1	VALVE, HYDRAULIC, Accuguide
3	87439241	1	BRACKET,
4	87449832	1	HOSE ASSY., To Priority Valve
5	87439246	1	HOSE ASSY., To Steering Pump
6	87439247	2	HOSE ASSY., Supply And Return
7	87439248	4	HOSE ASSY.,
8	87439249	2	HOSE ASSY.,
9	87439250	4	TEE,
10	87439251	1	ELBOW, Inc. 11
11	201-102	3	CONNECTOR, HYD., 13/16"-16 ORFS x 3/4"-16 ORB, Inc. 12, 13
12	237-6005	1	O-RING, 5-1, 90 Duro, .414" ID x .072" Thk,
13	238-6014	1	O-RING, -014, 90 Duro, .489" ID x .070" Thk,
11	238-6014	1	O-RING, -014, 90 Duro, .489" ID x .070" Thk,
15	201-305	1	ELBOW, 90є, 13/16"-16 x 3/4"-18 Adj, ORFS, Inc. 16, 17
16	237-6005	1	O-RING, 5-1, 90 Duro, .414" ID x .072" Thk,
17	238-6014	1	O-RING, -014, 90 Duro, .489" ID x .070" Thk,
24	201-311	2	ELBOW, 90є, 11/16"-16 x 7/16"-20, Adj, ORFS, Inc. 25, 26
25	237-6004	1	O-RING, 4-1, 90 Duro, .351" ID x .072" Thk,
26	238-6012	1	O-RING, -012, 90 Duro, .364" ID x .070" Thk,
27	701-320	1	ELBOW, 90є, 13/16"-16 ORFS x 13/16"-16 Fem Sw, Inc. 28
28	238-6014	1	O-RING, -014, 90 Duro, .489" ID x .070" Thk,
30	614-6016	4	BOLT, Hex, M6 x 16, 8.8,
31	832-10406	2	NUT, M6 x 1, Cl 8, M6
32	895-11006	8	WASHER, M6, 6,6 x 12,5 x 1,6 mm
33	814-6030	2	BOLT, Hex, M6 x 30, 8.8, 6 x 30; 8,8
34	86991000	4	CLAMP,

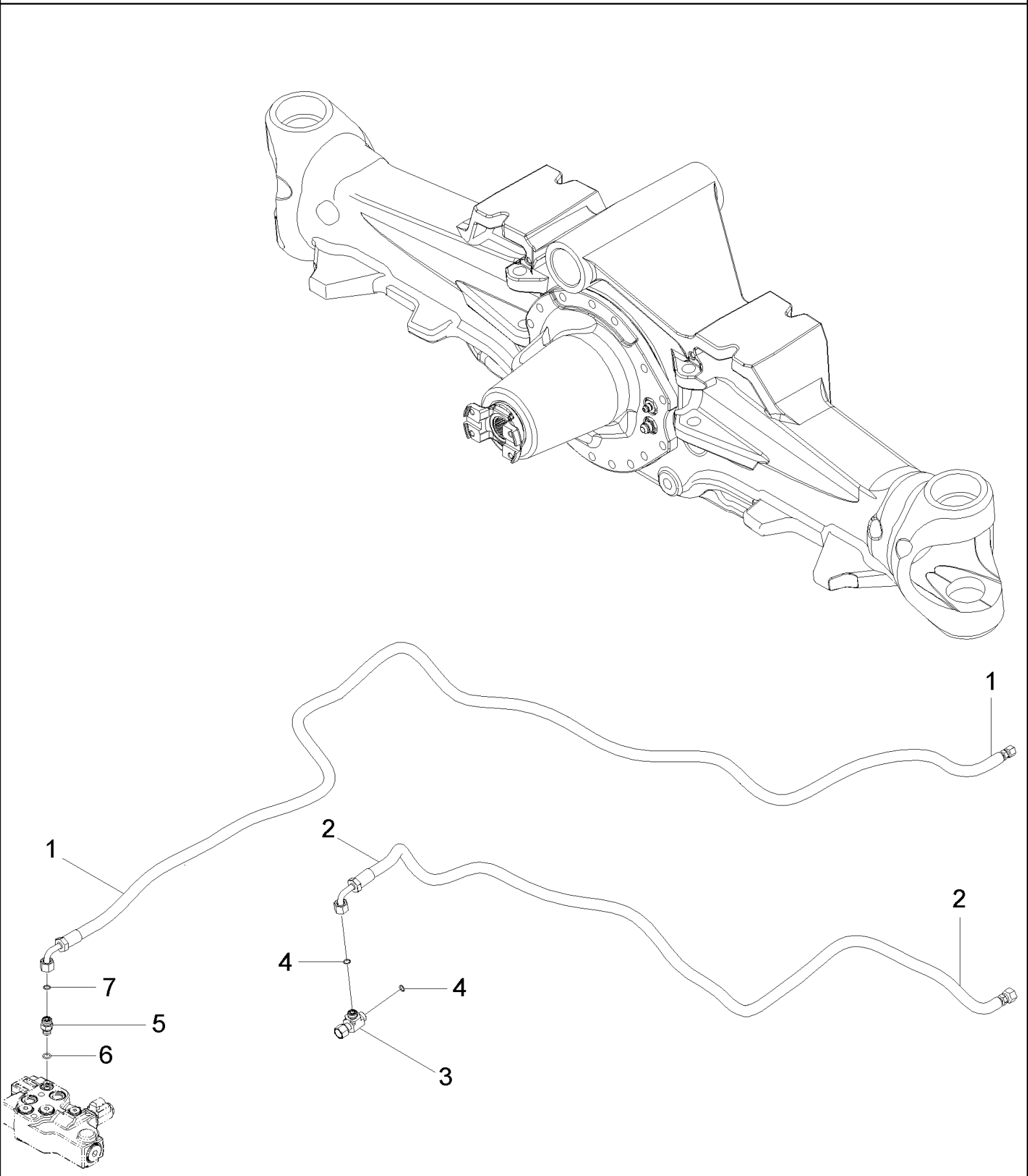
1
1
2
2
4
4
7
5
6
3

MX285 CASE IH MAGNUM TRACTOR (NORTH AMERICA)

05-12 HYDRAULIC SYSTEM - MFD DIFFERENTIAL LOCK

ссылка	Номер детали	Кол-во	Описание
1	414556A2	1	HOSE ASSY., Supply
2	428609A2	1	HOSE ASSY., Return, BSN AJB0304631
2	87445145	1	HOSE ASSY., Return, ASN AJB0304631
3	701-422	1	TEE, 11/16"-16 ORFS x 11/16"-16 Fem Sw Run, 11/16 fc sl x 11/16 sw, Inc. 4, BSN AJB0304631
3	701-416	1	TEE, 13/16"-16 ORFS x 13/16"-16 Fem Sw Run, 13/16 fc sl x 13/16 sw, Inc. 4, ASN AJB0304631
4	238-6012	2	O-RING, -012, 90 Duro, .364" ID x .070" Thk, , BSN AJB0304631
4	238-6014	2	O-RING, -014, 90 Duro, .489" ID x .070" Thk, , ASN AJB0304631
5	700-101	1	CONNECTOR, HYD., 11/16"-16 ORFS x M14 x 1.5 ORB, 11/16 fc sl x 14 Or, Inc. 6, 7
6	637-63113	1	O-RING, Cl 6, 11.3MM ID x 2.2 Thk, 11,3 ID x 2,2
7	238-6012	1	O-RING, -012, 90 Duro, .364" ID x .070" Thk,

MX285 CASE IH MAGNUM TRACTOR (NORTH AMERICA)

05-13 HYDRAULIC SYSTEM - SUSPENDED MFD AXLE

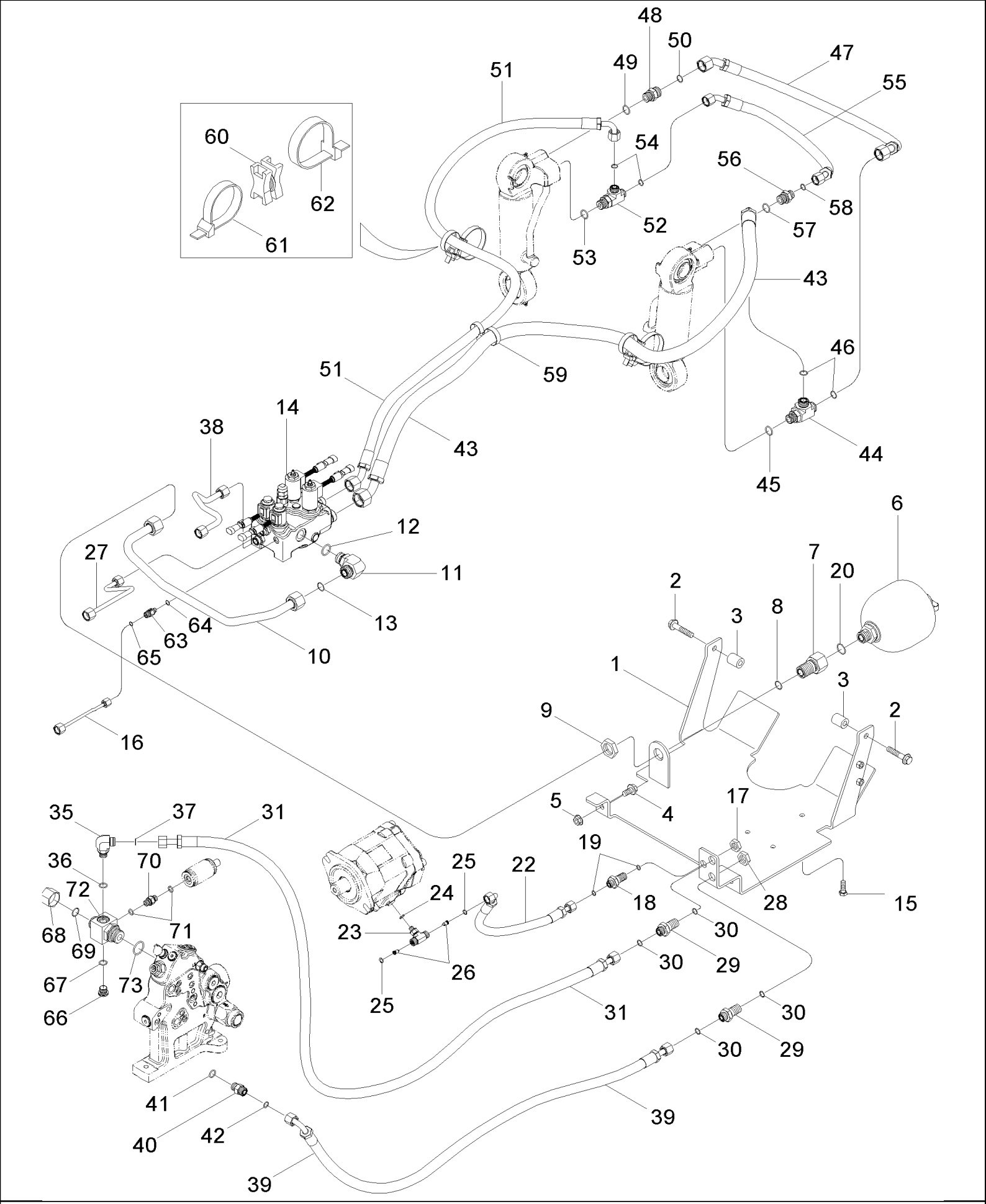

MX285 CASE IH MAGNUM TRACTOR (NORTH AMERICA)

05-13 HYDRAULIC SYSTEM - SUSPENDED MFD AXLE

ссылка	Номер детали	Кол-во	Описание
1	86983821	1	BRACKET,
2	844-12060	2	BOLT, Hex Flg, M12 x 60, 8.8,
3	444954A1	2	SPACER,
4	844-12025	2	BOLT, Hex Flg, M12 x 25, 8.8, M12 x 25; 8.8
5	9804279	2	NUT, M12 x 1.75, Flg, Cl 8,
6	452005A1	1	ACCUMULATOR,
7	86983862	1	CONNECTION, 3 WAY, Inc. 8
8	238-6018	1	O-RING, -018, 90 Duro, .739" ID x .070" Thk,
9	701-1249	1	NUT, LOCK, 1 3/16"-12, ORFS Blkhd, 1-3/16
10	86983811	1	TUBE ASSY.,
11	700-307	1	ELBOW, 90є, 1 3/16"-12 ORFS x M27 x 2 ORB, 1-3/16 fc sl x 27 Or, Inc. 12, 13
12	637-64236	1	O-RING, Cl 6, 23.6MM ID x 2.9 Thk, 23,6 ID x 2,9
13	238-6018	1	O-RING, -018, 90 Duro, .739" ID x .070" Thk,
14	452001A1	1	VALVE, Suspended Axle Control, BSN JAZ132797
14	NS	1	NOT SERVICED, VALVE, Suspended Axle Control, See Figure 05-14, ASN JAZ132797
15	514-742	3	BOLT, Hex, M10 x 1.25 x 30, 10.9, Full Thd, M10 x 30; 10.9
16	86990446	1	TUBE ASSY., Load Sense
17	701-909	1	NUT, LOCK, 11/16"-16, Blkhd, M10
18	701-120	1	UNION, 11/16"-16 ORFS, Blkd, 11/16 fc sl x bulk hd, Inc. 19
19	238-6012	2	O-RING, -012, 90 Duro, .364" ID x .070" Thk,
20	637-64236	1	O-RING, Cl 6, 23.6MM ID x 2.9 Thk, 23,6 ID x 2,9
22	86983810	1	HOSE,
23	86994121	1	TEE, Inc. 24 - 26
24	637-63093	1	O-RING, Cl 6, 9.3MM ID x 2.2 Thk, 9,3 ID x 2,2
25	238-6012	2	O-RING, -012, 90 Duro, .364" ID x .070" Thk,
26	133519C1	2	SCREEN,
27	86990447	1	TUBE ASSY., Supply
28	701-903	2	NUT, LOCK, 13/16"-16, ORFS Blkhd,
29	701-121	2	UNION, 13/16"-16 ORFS, Blkd, 13/16 fc sl x xblkhd, Inc. 30
30	238-6014	2	O-RING, -014, 90 Duro, .489" ID x .070" Thk,
31	87405555	1	TUBE ASSY., Supply
35	700-305	1	ELBOW, 90є, 13/16"-18 ORFS x M18 x 1.5 ORB, 13/16 fc sl x 18 Or, Inc. 36, 37
36	637-63153	1	O-RING, Cl 6, 15.3MM ID x 2.2 Thk, 15,3 ID x 2,2
37	238-6014	1	O-RING, -014, 90 Duro, .489" ID x .070" Thk,
38	86983812	1	TUBE ASSY., Return
39	86983809	1	HOSE ASSY., Return
40	201-102	1	CONNECTOR, HYD., 13/16"-16 ORFS x 3/4"-16 ORB, 13/16 fc sl x 3/4 Or, Inc. 41, 42
41	237-6008	1	O-RING, 8-1, 90 Duro, .644" ID x .087" Thk,
42	238-6014	1	O-RING, -014, 90 Duro, .489" ID x .070" Thk,
43	86990961	1	HOSE,
44	700-420	1	TEE, 1"-14 ORFS x M22 x 1.5 ORB Run, 1 fc sl x 22 Or, Inc. 45, 46
45	637-63193	1	O-RING, Cl 6, 19.3MM ID x 2.2 Thk, 19,3 ID x 2,2
46	238-6016	2	O-RING, -016, 90 Duro, .614" ID x .070" Thk,
47	86990963	1	HOSE, FLEXIBLE,
48	700-103	1	CONNECTOR, HYD., 1"-14 ORFS x M22 x 1.5 ORB, 1 fc sl x 22 Or, Inc. 49, 50

ссылка	Номер детали	Кол-во	Описание
49	637-63193	1	O-RING, Cl 6, 19.3MM ID x 2.2 Thk, 19,3 ID x 2,2
50	238-6016	1	O-RING, -016, 90 Duro, .614" ID x .070" Thk,
51	86990962	1	HOSE,
52	700-445	1	TEE, 13/16"-16 ORFS x M22 x 1.5 ORB Run, 13/16 fc sl x 22 Or, Inc. 53, 54
53	637-63193	1	O-RING, Cl 6, 19.3MM ID x 2.2 Thk, 19,3 ID x 2,2
54	238-6014	2	O-RING, -014, 90 Duro, .489" ID x .070" Thk,
55	86990964	1	HOSE,
56	700-162	1	CONNECTOR, HYD., 13/16"-16 ORFS x M22 x 1.5 ORB, 13/16 fc sl x 22 Or, Inc. 57, 58
57	637-63193	1	O-RING, Cl 6, 19.3MM ID x 2.2 Thk, 19,3 ID x 2,2
58	238-6014	1	O-RING, -014, 90 Duro, .489" ID x .070" Thk,
59	86991000	1	CLAMP,
60	86991001	2	SPACER,
61	86991009	2	STRAP, CABLE,
62	86991007	2	STRAP, CABLE,
63	86984110	1	VALVE, Check, Inc. 64, 65
64	637-63153	1	O-RING, Cl 6, 15.3MM ID x 2.2 Thk, 15,3 ID x 2,2
65	238-6011	1	O-RING, -011, 90 Duro, .301" ID x .070" Thk,
66	221578A1	1	PLUG, Hex Soc, M18 x 1.5, ORB, Inc. 67
67	637-63153	1	O-RING, Cl 6, 15.3MM ID x 2.2 Thk, 15,3 ID x 2,2
68	701-907	1	CAP, 1 3/16"-12 ORFS, 1-3/16, Inc. 69
69	238-6018	1	O-RING, -018, 90 Duro, .739" ID x .070" Thk,
70	87403003	1	CONNECTOR, HYD., Inc. 71
71	637-63113	2	O-RING, Cl 6, 11.3MM ID x 2.2 Thk, 11,3 ID x 2,2
72	87402551	1	TEE, Inc. 73
73	637-64296	1	O-RING, Cl 6, 29.6MM ID x 2.9 Thk, 29,6 ID x 2,9

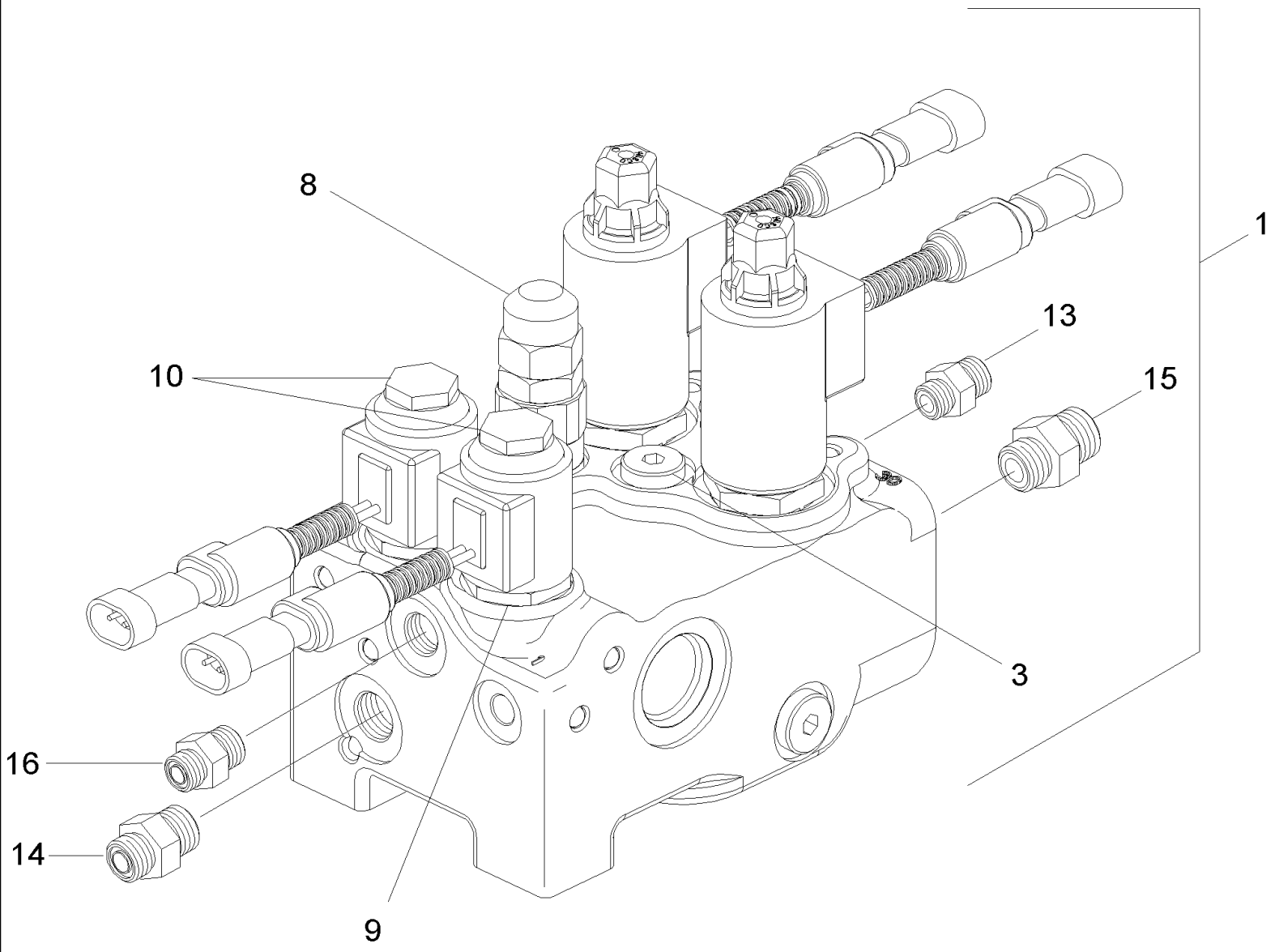
8
1
13
10
15
3
16
14
9

MX285 CASE IH MAGNUM TRACTOR (NORTH AMERICA)

05-14 VALVE ASSY - SUSPENDED MFD AXLE

сылка	Номер детали	Кол-во	Описание
1	452001A1	1	VALVE, Suspended Axle Control, Inc. 2 - 16, BSN JAZ132797
1	NS	1	NOT SERVICED, VALVE, Suspended Axle Control, Inc. 2 - 16, ASN JAZ132797
2	NS	1	NOT SERVICED, VALVE, BSN JAZ132797
2	87439776	1	VALVE, Without Fittings, Inc. 3 - 12, ASN JAZ132797
3	47126454	1	SCREW,
4	87437896	1	KIT, SERVICE, Inc. 5, 6
5	87437191	1	VALVE, Poppet
6	87437192	1	PISTON,
7	47126452	1	PLUG,
8	47126451	1	VALVE, PRESSURE RELIEF, Relief
9	82025708	2	BODY, Solenoid
10	82025709	2	WINDING, ELECTRICAL, Coil
11	87435072	1	VALVE,
12	47126449	1	VALVE, CHECK,
13	47125482	1	CONNECTOR, HYD., M27 x 1 in
14	82019684	1	CONNECTOR, HYD., M16 x 13/16 in
15	82019639	1	CONNECTOR, HYD., M27 x 1-3/16 in
16	82019693	1	CONNECTOR, HYD., M14 x 11/16 in

MX285 CASE IH MAGNUM TRACTOR (NORTH AMERICA)

05-15 FRONT AXLE - MOUNTING, MFD

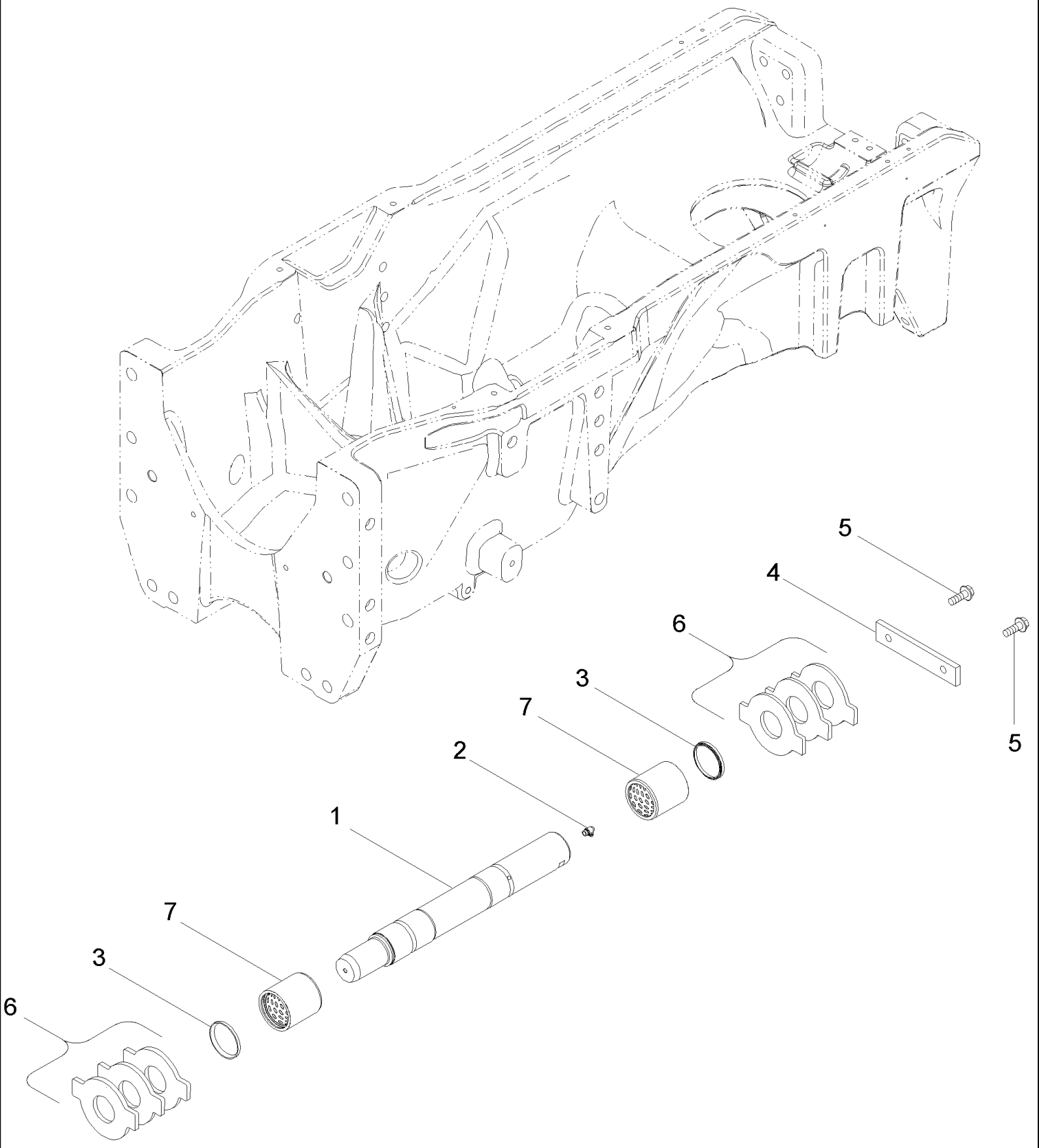

MX285 CASE IH MAGNUM TRACTOR (NORTH AMERICA)

05-15 FRONT AXLE - MOUNTING, MFD

ссылка	Номер детали	Кол-во	Описание
1	87400196	1	PIN ASSY., Inc. 2, Order 87343146. Also Order 2 of 87433501 for Initial Replacement
1	87343146	1	PIN ASSY., Inc. 2, Replaces 87400196. Also Order 2 of 87433501 for Initial Replacement
2	219-92	2	NIPPLE, LUBE, 90є, 1/8" NPT x .76" lg, Drive, Grease, 90, 1/8 NPT
3	87400202	2	SEAL,
4	226686A3	1	PLATE,
5	844-12035	2	BOLT, Hex Flg, M12 x 35, 8.8, M12 x 35; 8.8
6	87403514	AR	WASHER, THRUST, Steel, 6.25 / 8.25 mm
6	87400218	AR	WASHER, THRUST, Steel, 7.0 / 9.0 mm
6	87400219	AR	WASHER, THRUST, Steel, 7.5 / 9.5 mm
6	87400220	AR	WASHER, THRUST, Steel, 8.0 / 10.0 mm
6	87309060	AR	WASHER, THRUST, Nylon, 5.75 / 7.75 mm
6	87309061	AR	WASHER, THRUST, Nylon, 6.25 / 8.25 mm
6	87309062	AR	WASHER, THRUST, Nylon, 7.0 / 9.0 mm
6	87309063	AR	WASHER, THRUST, Nylon, 7.5 / 9.5 mm
6	87369711	AR	WASHER, THRUST, Nylon, 8.0 / 10.0 mm
7	86993401	2	BUSHING, Axle Pivot Pin, Used with 87400196
7	87433501	2	BUSHING, Axle Pivot Pin, Used with 87343146

MX285 CASE IH MAGNUM TRACTOR (NORTH AMERICA)

05-16 FRONT AXLE - SUSPENSION, SUSPENDED MFD

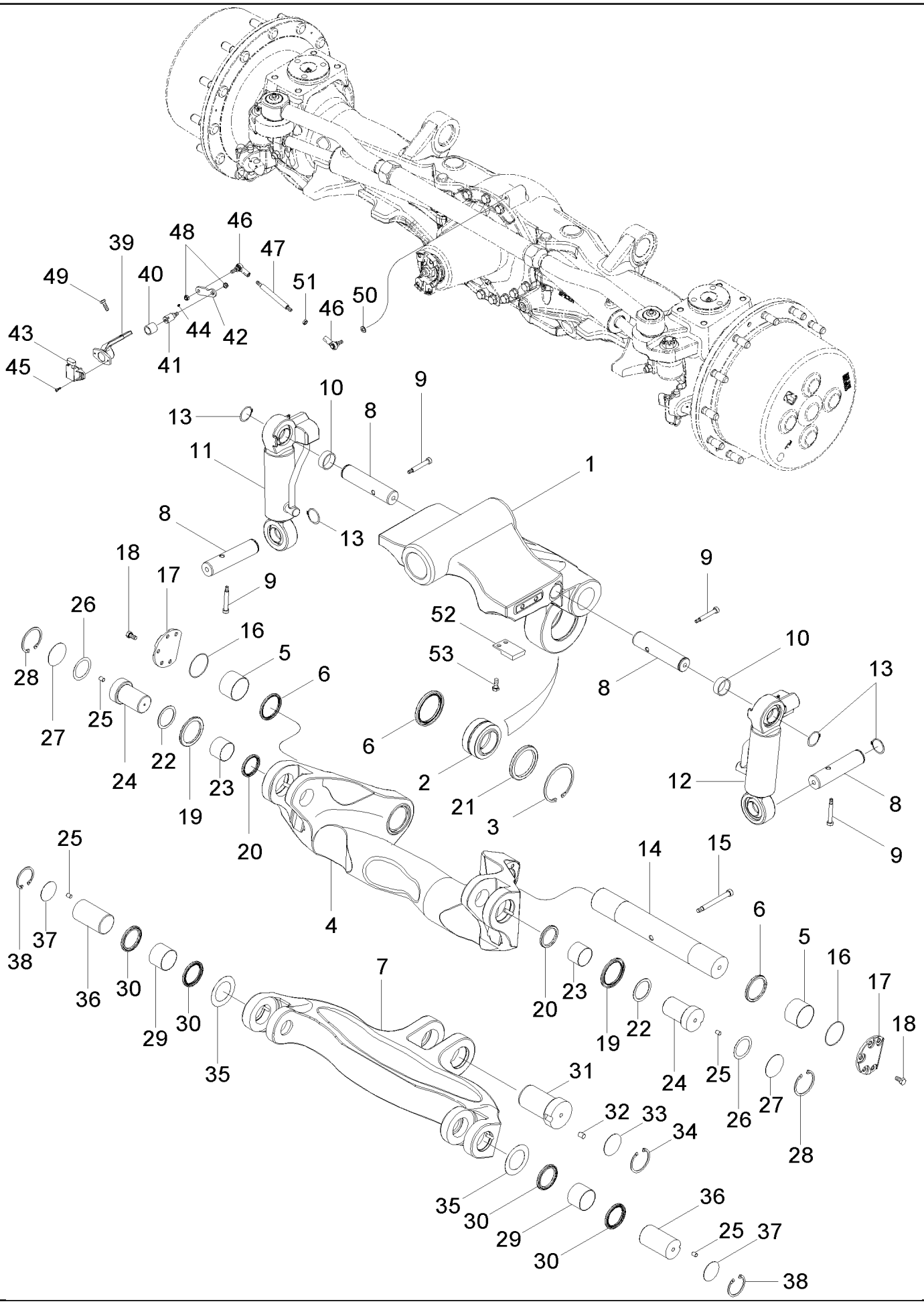

MX285 CASE IH MAGNUM TRACTOR (NORTH AMERICA)

05-16 FRONT AXLE - SUSPENSION, SUSPENDED MFD

ссылка	Номер детали	Кол-во	Описание
1	87406430	1	CRADLE,
2	87406434	1	BEARING, BALL,
3	87406477	1	RING, SNAP,
4	87406432	1	ARM, Upper Swing
5	87406435	2	BUSHING,
6	87406443	2	SEAL,
7	87406431	1	ARM, Lower Swing
8	87406468	4	PIN,
9	87406494	4	BOLT,
10	87406485	2	SPACER,
11	87406483	1	CYLINDER, Left Hand
12	87406484	1	CYLINDER, Right Hand
13	87406497	4	RING, SNAP,
14	87406467	1	PIN,
15	87406493	1	SCREW,
16	87406502	2	O-RING,
17	87406476	2	PLATE,
18	87406496	10	BOLT,
19	87406441	2	SEAL,
20	87406440	2	SEAL,
21	87406445	1	SEAL,
22	87406447	2	WASHER, THRUST,
23	87406436	2	BUSHING,
24	87406452	2	PIN,
25	87406455	4	PIN,
26	87406450	1	WASHER, THRUST,
27	87406449	2	WASHER, THRUST,
28	87406474	2	RING, SNAP,
29	87406437	2	BUSHING,
30	87406439	4	SEAL,
31	87406453	1	PIN,
32	87406454	1	PIN,
33	87406446	1	WASHER, THRUST,
34	87406469	1	RING, SNAP,
35	87406486	1	SPACER,
36	87406451	2	PIN,
37	87406448	2	WASHER, THRUST,
38	87406473	2	RING, SNAP,
39	87406472	1	BRACKET,
40	87406438	1	BUSHING,
41	87406487	1	SENSOR,
42	87406470	1	LINK, CONNECTING,
43	87406433	1	SENSOR,
44	87406492	1	SET SCREW,
45	87406498	2	SCREW,

ссылка	Номер детали	Кол-во	Описание
46	87406490	2	BALL JOINT,
47	87406488	1	SHAFT,
48	87406499	2	NUT,
49	87406503	2	SCREW,
50	87406495	1	WASHER,
51	87406500	1	NUT,
52	447672A1	2	BLOCK,
53	628-10025	4	SCREW, Hex, M10 x 25, 10.9, Full Thd, M10 x 25; 10.9

MX285 CASE IH MAGNUM TRACTOR (NORTH AMERICA)

05-18 MFD AXLE HOUSING ASSEMBLY - STANDARD WITH 12 BOLT HUB, WITHOUT DIFFERENTIAL LOCK, BSN MY00184570

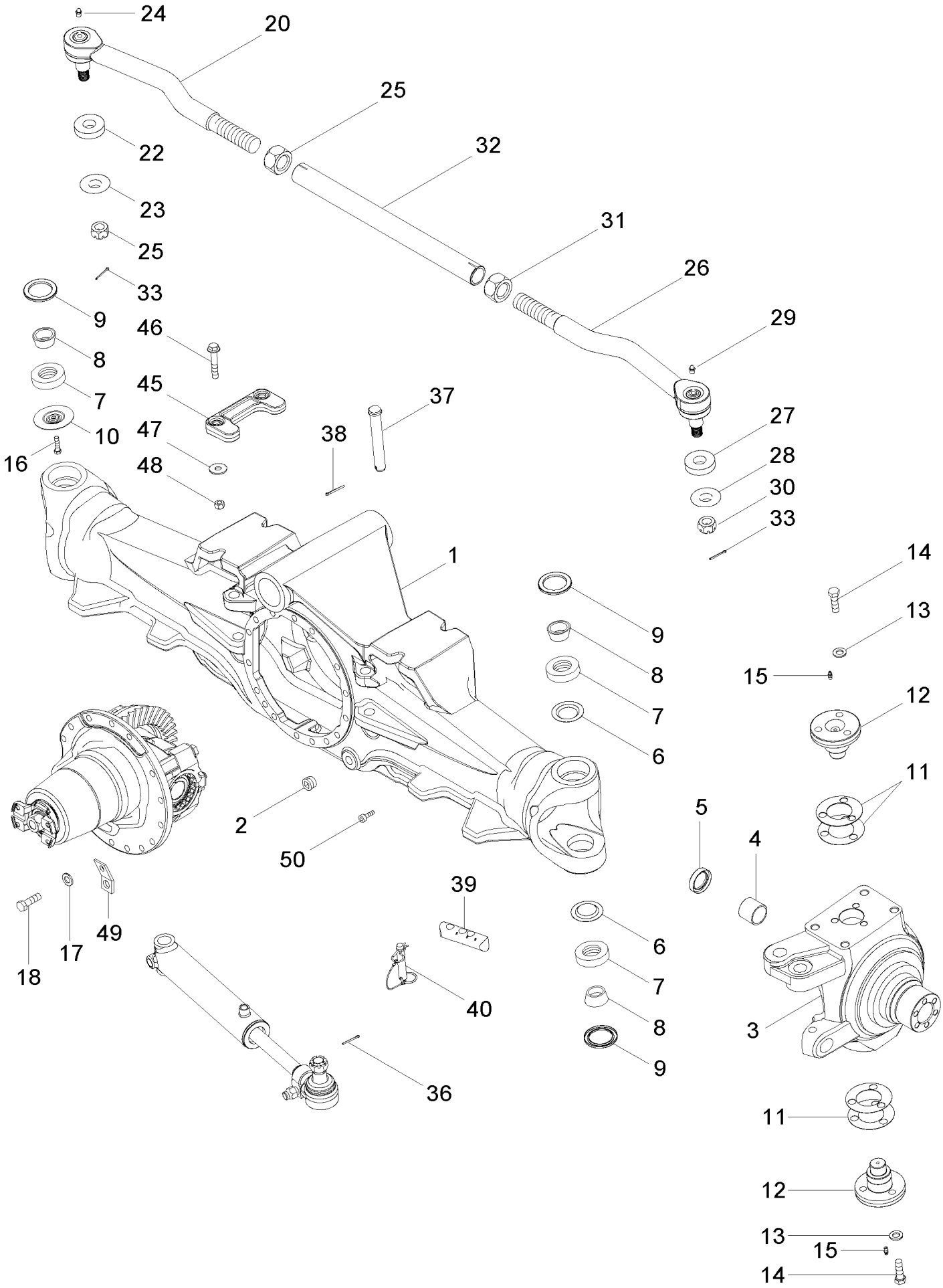

USED FOR ALL MFD AXLE SERIAL NUMBERS STARTING WITH FUSA, GUSA, and MUSA.USED FOR MFD AXLE SERIAL NUMBERS BEFORE MY00184570

MX285 CASE IH MAGNUM TRACTOR (NORTH AMERICA)

05-18 MFD AXLE HOUSING ASSEMBLY - STANDARD WITH 12 BOLT HUB, WITHOUT DIFFERENTIAL LOCK, BSN MY00184570

ссылка	Номер детали	Кол-во	Описание
	412303A6	1	AXLE ASSY, 4WD, Complete With Differential And Planetaries
1	87404249	1	HOUSING,
2	221-887	2	PLUG, 3/4
3	292564A2	1	KNUCKLE, STEERING, Right Hand
3	292560A2	1	KNUCKLE, STEERING, Left Hand
4	235628A1	1	BUSHING,
5	128647A1	1	SEAL,
6	281937A1	3	RETAINER,
	368728A1	4	BEARING, Inc. 7, 8
7	NSS	1	NOT SERVICED SEPARATELY, Ring, Inner
8	NSS	1	NOT SERVICED SEPARATELY, Ring, Outer
9	281939A1	4	SEAL,
10	281937A1	1	RETAINER, If Equipped (Not Shown)
10	87440529	1	RETAINER, If Equipped (Shown)
	313557A1	1	KIT, SHIM, Inc. 11
11	NSS	5	NOT SERVICED SEPARATELY, Shim
11	NSS	5	NOT SERVICED SEPARATELY, Shim
11	NSS	5	NOT SERVICED SEPARATELY, Shim
11	NSS	5	NOT SERVICED SEPARATELY, Shim
11	NSS	5	NOT SERVICED SEPARATELY, Shim
11	NSS	5	NOT SERVICED SEPARATELY, Shim
12	378410A1	4	CAP,
13	896-11014	12	WASHER, M12 x 28.5 x 3, HT, 15,5 x 28 x 3 mm
14	627-14045	12	BOLT, Hex, M14 x 45, 10.9, Full Thd, M14 x 45; 10,9
15	219-1	4	NIPPLE, LUBE, 1/8"-27 x .66 lg,
16	86977726	1	SCREW, Hex, M6 x 12, 8.8, M6 x 12; 8.8, If Equipped
17	896-11014	16	WASHER, M12 x 28.5 x 3, HT, 15,5 x 28 x 3 mm
18	627-14045	16	BOLT, Hex, M14 x 45, 10.9, Full Thd, M14 x 45; 10,9
20	311169A2	1	BALL JOINT, Left Hand Threads, Inc. 21 - 24, BSN FUSA6100150
20	87455742	1	BALL JOINT, Left Hand Threads, Inc. 21 - 24, ASN FUSA6100150
	333617A1	1	KIT, GASKET, Inc. 21, 22, BSN FUSA6100150
	87455748	1	KIT, Inc. 21, 22, ASN FUSA6100150
21	NSS	1	NOT SERVICED SEPARATELY, Boot
22	NSS	1	NOT SERVICED SEPARATELY, Spacer
23	429-1314	1	NUT, SLOTTED, 7/8"-14, G8, 7/8 NF; 8, BSN FUSA6100150
23	87455806	1	NUT, SLOTTED, M22, ASN FUSA6100150
24	219-6	1	NIPPLE, LUBE, 1/4"-28 x .54" lg, Grease 1/4 str, BSN FUSA6100150
24	87455807	1	FITTING, Grease, ASN FUSA6100150
25	311168A1	1	NUT, 1-1/2, Left Hand Threads, BSN FUSA6100150
25	87455741	1	NUT, M38, Left Hand Threads, ASN FUSA6100150
26	311170A2	1	BALL JOINT, Right Hand Threads, Inc. 27 - 30, BSN FUSA6100150
26	87455743	1	BALL JOINT, Right Hand Threads, Inc. 27 - 30, ASN FUSA6100150
	333617A1	1	KIT, GASKET, Inc. 27, 28, BSN FUSA6100150
	87455748	1	KIT, Inc. 27, 28, ASN FUSA6100150
27	NSS	1	NOT SERVICED SEPARATELY, Boot

USED FOR ALL MFD AXLE SERIAL NUMBERS STARTING WITH FUSA, GUSA, and MUSA.USED FOR MFD AXLE SERIAL NUMBERS BEFORE MY00184570

MX285 CASE IH MAGNUM TRACTOR (NORTH AMERICA)

05-18 MFD AXLE HOUSING ASSEMBLY - STANDARD WITH 12 BOLT HUB, WITHOUT DIFFERENTIAL LOCK, BSN MY00184570

ссылка	Номер детали	Кол-во	Описание
28	NSS	1	NOT SERVICED SEPARATELY, Spacer
29	219-6	1	NIPPLE, LUBE, 1/4"-28 x .54" lg, Grease 1/4 str, BSN FUSA6100150
29	87455807	1	FITTING, Grease, ASN FUSA6100150
30	429-1314	1	NUT, SLOTTED, 7/8"-14, G8, 7/8 NF; 8, BSN FUSA6100150
30	87455806	1	NUT, SLOTTED, M22, ASN FUSA6100150
31	311167A1	1	NUT, 1-1/2, Right Hand Threads, BSN FUSA6100150
31	87455739	1	NUT, M38, Right Hand Threads, ASN FUSA6100150
32	311166A1	1	TUBE, , BSN FUSA6100150
32	87455737	1	TUBE, , ASN FUSA6100150
33	432-820	2	PIN, SPLIT (COTTER), 1/8" x 1 1/4", 1/8" x 1-1/4"
36	432-820	2	PIN, SPLIT (COTTER), 1/8" x 1 1/4", 1/8" x 1-1/4"
37	292565A1	2	PIN, LARGE,
38	733-4032	2	PIN, SPLIT (COTTER), M4 x 32, 4 x 32 mm
39	281914A1	2	ROD, Steering Stop, Short, 3 Hole (Shown)
39	451995A1	2	ROD, ADJUSTMENT, Steering Stop, Long, 4 Hole (Not Shown)
40	87404993	2	PIN, AXLE,
45	297333A2	2	BLOCK ASSY.,
46	844-12070	4	BOLT, Hex Flg, M12x 70, 8.8, M12 x 70; 8.8
47	495-21069	4	WASHER, 5/8", 11/16 x 1-3/4 x 9/64
48	829-1412	4	NUT, M12, Cl 10, M12; 10
49	352782A1	1	STRAP,
50	863-8020	2	SCREW, Hex Soc Hd, M8 x 20, 12.9, M8 x 20; 12.9

USED FOR ALL MFD AXLE SERIAL NUMBERS STARTING WITH FUSA, GUSA, and MUSA.USED FOR MFD AXLE SERIAL NUMBERS BEFORE MY00184570

MX285 CASE IH MAGNUM TRACTOR (NORTH AMERICA)

05-18A MFD AXLE HOUSING ASSEMBLY - STANDARD WITH 12 BOLT HUB, WITHOUT DIFFERENTIAL LOCK, ASN MY00195744

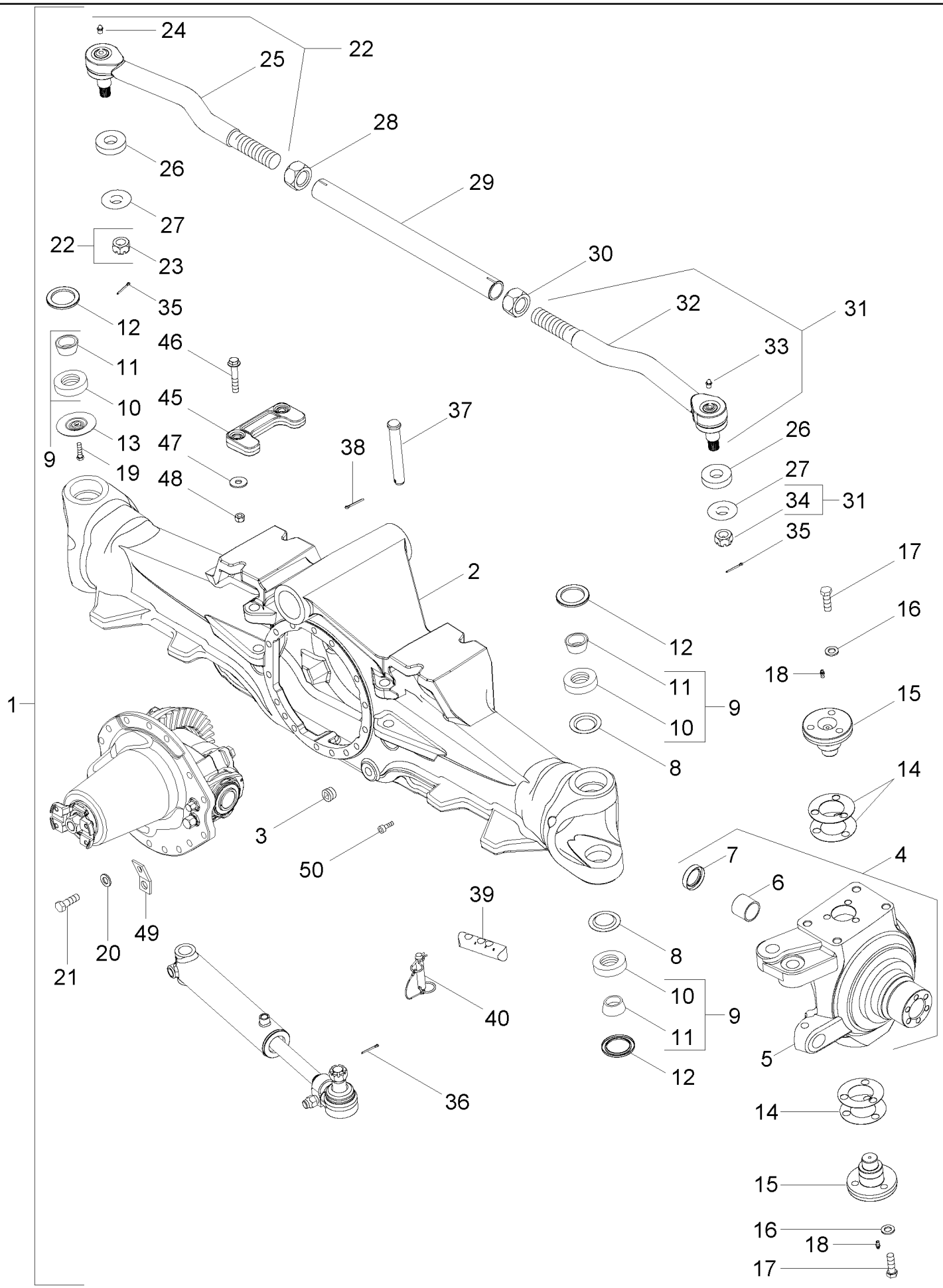

SERIAL NUMBER IS FOR THE MFD AXLE

MX285 CASE IH MAGNUM TRACTOR (NORTH AMERICA)

05-18A MFD AXLE HOUSING ASSEMBLY - STANDARD WITH 12 BOLT HUB, WITHOUT DIFFERENTIAL LOCK, ASN MY00195744

ссылка	Номер детали	Кол-во	Описание
1	87454945	1	AXLE, Complete With Differential And Planetaries, Inc. 2 - 55
2	87404249	1	HOUSING,
3	221-887	2	PLUG, 3/4
4	292564A2	1	KNUCKLE, STEERING, Right Hand, Inc. 5 - 7
4	292560A2	1	KNUCKLE, STEERING, Left Hand, Inc. 5 - 7
5	NSS	1	NOT SERVICED SEPARATELY, Knuckle, Housing
6	235628A1	1	BUSHING,
7	128647A1	1	SEAL,
8	281937A1	3	RETAINER,
9	368728A1	4	BEARING, Inc. 10, 11
10	NSS	1	NOT SERVICED SEPARATELY, Ring, Inner
11	NSS	1	NOT SERVICED SEPARATELY, Ring, Outer
12	281939A1	4	SEAL,
13	87440529	1	RETAINER, If Equipped
14	313557A1	4	KIT, SHIM, Inc. 14
14	NSS	5	NOT SERVICED SEPARATELY, Shim .005
14	NSS	5	NOT SERVICED SEPARATELY, Shim .007
14	NSS	5	NOT SERVICED SEPARATELY, Shim .010
14	NSS	5	NOT SERVICED SEPARATELY, Shim .015
14	NSS	5	NOT SERVICED SEPARATELY, Shim .030
14	NSS	5	NOT SERVICED SEPARATELY, Shim .060
15	378410A1	4	CAP,
16	896-11014	12	WASHER, M12 x 28.5 x 3, HT,
17	627-14045	12	BOLT, Hex, M14 x 45, 10.9, Full Thd,
18	219-1	4	NIPPLE, LUBE, 1/8"-27 x .66 lg,
19	615-6012	1	BOLT, Hex, M6 x 12, 8.8, Full Thd, If Equipped
20	896-11014	16	WASHER, M12 x 28.5 x 3, HT,
21	627-14045	16	BOLT, Hex, M14 x 45, 10.9, Full Thd,
22	87455742	1	BALL JOINT, Left Hand Threads, Inc. 23 - 25
23	87455741	1	NUT, M38, Left Hand Threads
24	87455807	1	FITTING, Grease
25	NSS	1	NOT SERVICED SEPARATELY, Ball Joint Left Hand
26	NSS	1	NOT SERVICED SEPARATELY,
27	NSS	1	NOT SERVICED SEPARATELY,
28	87455806	1	NUT, SLOTTED, M22
29	87455737	1	TUBE,
30	87455739	1	NUT, M38, Right Hand Threads
31	87455743	1	BALL JOINT, Right Hand Threads, Inc. 32 - 34
32	NSS	1	NOT SERVICED SEPARATELY, Ball Joint Right Hand
33	87455807	1	FITTING, Grease
34	87455806	1	NUT, SLOTTED, M22
35	432-820	2	PIN, SPLIT (COTTER), 1/8" x 1 1/4",
36	432-820	2	PIN, SPLIT (COTTER), 1/8" x 1 1/4",
37	292565A1	2	PIN, LARGE,
38	733-4032	2	PIN, SPLIT (COTTER), M4 x 32,

SERIAL NUMBER IS FOR THE MFD AXLE

MX285 CASE IH MAGNUM TRACTOR (NORTH AMERICA)

05-18A MFD AXLE HOUSING ASSEMBLY - STANDARD WITH 12 BOLT HUB, WITHOUT DIFFERENTIAL LOCK, ASN MY00195744

сылка	Номер детали	Кол-во	Описание
39	281914A1	2	ROD, Steering Stop, Short, 3 Hole
40	87404993	2	PIN, AXLE,
45	297333A2	2	BLOCK ASSY.,
46	844-12070	4	BOLT, Hex Flg, M12x 70, 8.8,
47	495-21069	4	WASHER, 5/8",
48	829-1412	4	NUT, M12, Cl 10,
49	352782A1	1	STRAP,
50	863-8020	2	SCREW, Hex Soc Hd, M8 x 20, 12.9,
54	87433501	2	BUSHING, (Not Shown)
55	353-77	8	PLUG, Cap, .576" OD, (Not Shown)

SERIAL NUMBER IS FOR THE MFD AXLE

MX285 CASE IH MAGNUM TRACTOR (NORTH AMERICA)

05-20 MFD AXLE HOUSING ASSEMBLY - STANDARD WITH 12 BOLT HUB, WITH DIFFERENTIAL LOCK, BSN MY00182905

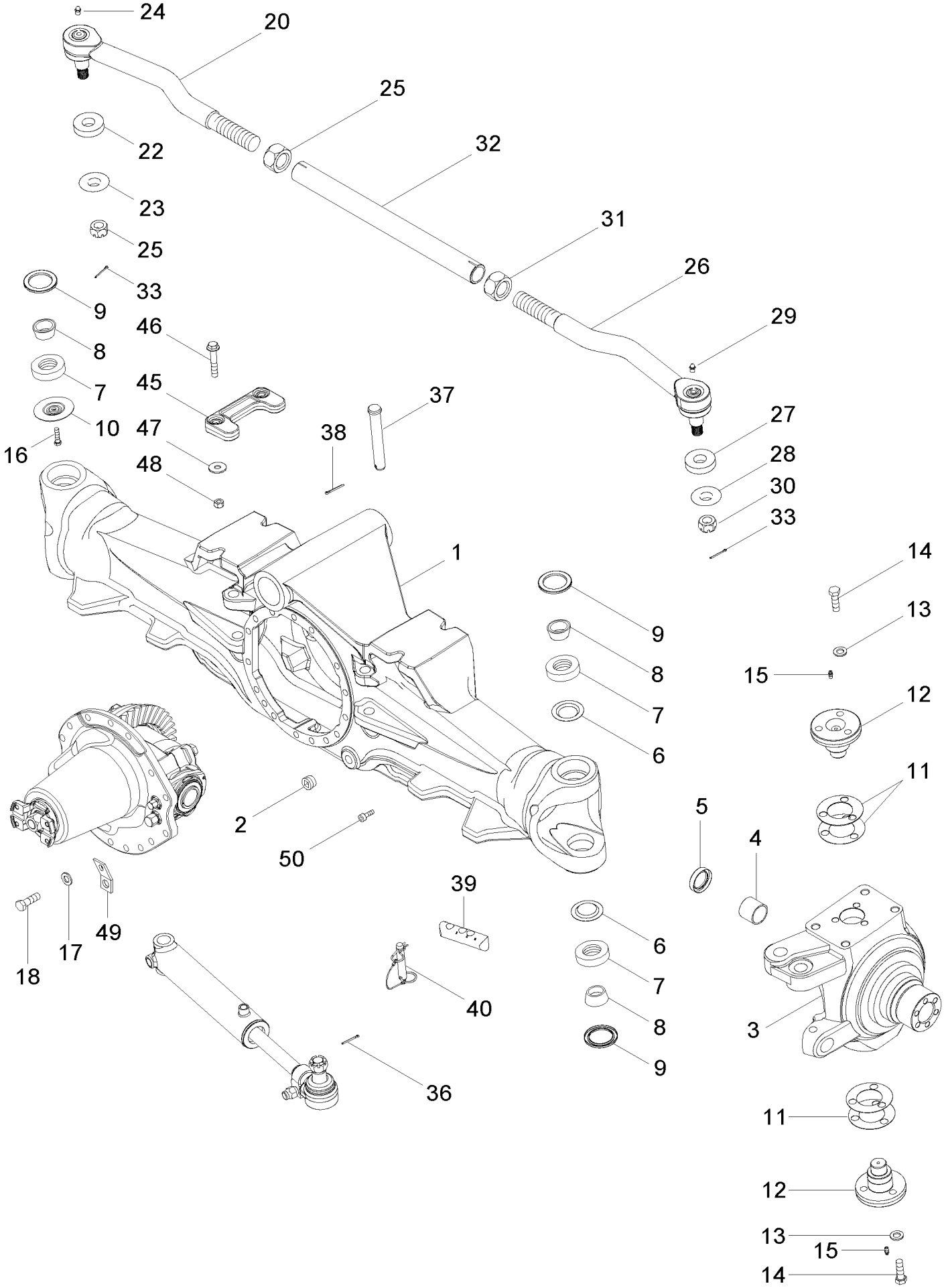

USED FOR ALL MFD AXLE SERIAL NUMBERS STARTING WITH FUSA, GUSA, and MUSA.USED FOR MFD AXLE SERIAL NUMBERS BEFORE MY00182905

MX285 CASE IH MAGNUM TRACTOR (NORTH AMERICA)

05-20 MFD AXLE HOUSING ASSEMBLY - STANDARD WITH 12 BOLT HUB, WITH DIFFERENTIAL LOCK, BSN MY00182905

ссылка	Номер детали	Кол-во	Описание
	407312A6	1	AXLE ASSY, 4WD, Complete With Differential And Planetaries
1	87404249	1	HOUSING,
2	221-887	2	PLUG, 3/4
3	292564A2	1	KNUCKLE, STEERING, Right Hand
3	292560A2	1	KNUCKLE, STEERING, Left Hand
4	235628A1	1	BUSHING,
5	128647A1	1	SEAL,
6	281937A1	3	RETAINER,
	368728A1	4	BEARING, Inc. 7, 8
7	NSS	1	NOT SERVICED SEPARATELY, Ring, Inner
8	NSS	1	NOT SERVICED SEPARATELY, Ring, Outer
9	281939A1	4	SEAL,
10	281937A1	1	RETAINER, If Equipped (Not Shown)
10	87440529	1	RETAINER, If Equipped (Shown)
	313557A1	1	KIT, SHIM, Inc. 11
11	NSS	5	NOT SERVICED SEPARATELY, Shim
11	NSS	5	NOT SERVICED SEPARATELY, Shim
11	NSS	5	NOT SERVICED SEPARATELY, Shim
11	NSS	5	NOT SERVICED SEPARATELY, Shim
11	NSS	5	NOT SERVICED SEPARATELY, Shim
11	NSS	5	NOT SERVICED SEPARATELY, Shim
12	378410A1	4	CAP,
13	896-11014	12	WASHER, M12 x 28.5 x 3, HT, 15,5 x 28 x 3 mm
14	627-14045	12	BOLT, Hex, M14 x 45, 10.9, Full Thd, M14 x 45; 10,9
15	219-1	4	NIPPLE, LUBE, 1/8"-27 x .66 lg,
16	86977726	1	SCREW, Hex, M6 x 12, 8.8, M6 x 12; 8.8, If Equipped
17	896-11014	16	WASHER, M12 x 28.5 x 3, HT, 15,5 x 28 x 3 mm
18	627-14045	16	BOLT, Hex, M14 x 45, 10.9, Full Thd, M14 x 45; 10,9
20	311169A2	1	BALL JOINT, Left Hand Threads, Inc. 21 - 24, BSN FUSA6500006
20	87455742	1	BALL JOINT, Left Hand Threads, Inc. 21 - 24, ASN FUSA6500006
	333617A1	1	KIT, GASKET, Inc. 21, 22, BSN FUSA6500006
	87455748	1	KIT, Inc. 21, 22, ASN FUSA6500006
21	NSS	1	NOT SERVICED SEPARATELY, Boot
22	NSS	1	NOT SERVICED SEPARATELY, Spacer
23	429-1314	1	NUT, SLOTTED, 7/8"-14, G8, 7/8 NF; 8, BSN FUSA6500006
23	87455806	1	NUT, SLOTTED, M22, ASN FUSA6500006
24	219-6	1	NIPPLE, LUBE, 1/4"-28 x .54" lg, Grease 1/4 str, BSN FUSA6500006
24	87455807	1	FITTING, Grease, ASN FUSA6500006
25	311168A1	1	NUT, 1-1/2, Left Hand Threads, BSN FUSA6500006
25	87455741	1	NUT, M38, Left Hand Threads, ASN FUSA6500006
26	311170A2	1	BALL JOINT, Right Hand Threads, Inc. 27 - 30, BSN FUSA6500006
26	87455743	1	BALL JOINT, Right Hand Threads, Inc. 27 - 30, ASN FUSA6500006
	333617A1	1	KIT, GASKET, Inc. 27, 28, BSN FUSA6500006
	87455748	1	KIT, Inc. 27, 28, ASN FUSA6500006
27	NSS	1	NOT SERVICED SEPARATELY, Boot

USED FOR ALL MFD AXLE SERIAL NUMBERS STARTING WITH FUSA, GUSA, and MUSA.USED FOR MFD AXLE SERIAL NUMBERS BEFORE MY00182905

MX285 CASE IH MAGNUM TRACTOR (NORTH AMERICA)

05-20 MFD AXLE HOUSING ASSEMBLY - STANDARD WITH 12 BOLT HUB, WITH DIFFERENTIAL LOCK, BSN MY00182905

ссылка	Номер детали	Кол-во	Описание
28	NSS	1	NOT SERVICED SEPARATELY, Spacer
29	219-6	1	NIPPLE, LUBE, 1/4"-28 x .54" lg, Grease 1/4 str, BSN FUSA6500006
29	87455807	1	FITTING, Grease, ASN FUSA6500006
30	429-1314	1	NUT, SLOTTED, 7/8"-14, G8, 7/8 NF; 8, BSN FUSA6500006
30	87455806	1	NUT, SLOTTED, M22, ASN FUSA6500006
31	311167A1	1	NUT, 1-1/2, Right Hand Threads, BSN FUSA6500006
31	87455739	1	NUT, M38, Right Hand Threads, ASN FUSA6500006
32	311166A1	1	TUBE, , BSN FUSA6500006
32	87455737	1	TUBE, , ASN FUSA6500006
33	432-820	2	PIN, SPLIT (COTTER), 1/8" x 1 1/4", 1/8" x 1-1/4"
36	432-820	2	PIN, SPLIT (COTTER), 1/8" x 1 1/4", 1/8" x 1-1/4"
37	292565A1	2	PIN, LARGE,
38	733-4032	2	PIN, SPLIT (COTTER), M4 x 32, 4 x 32 mm
39	281914A1	2	ROD, Steering Stop, Short, 3 Hole (Shown)
39	451995A1	2	ROD, ADJUSTMENT, Steering Stop, Long, 4 Hole (Not Shown)
40	87404993	2	PIN, AXLE,
45	297333A2	2	BLOCK ASSY.,
46	844-12070	4	BOLT, Hex Flg, M12x 70, 8.8, M12 x 70; 8.8
47	495-21069	4	WASHER, 5/8", 11/16 x 1-3/4 x 9/64
48	829-1412	4	NUT, M12, Cl 10, M12; 10
49	352782A1	1	STRAP,
50	863-8020	2	SCREW, Hex Soc Hd, M8 x 20, 12.9, M8 x 20; 12.9

USED FOR ALL MFD AXLE SERIAL NUMBERS STARTING WITH FUSA, GUSA, and MUSA.USED FOR MFD AXLE SERIAL NUMBERS BEFORE MY00182905

MX285 CASE IH MAGNUM TRACTOR (NORTH AMERICA)

05-20A MFD AXLE HOUSING ASSEMBLY - STANDARD WITH 12 BOLT HUB, WITH DIFFERENTIAL LOCK, ASN MY00193740

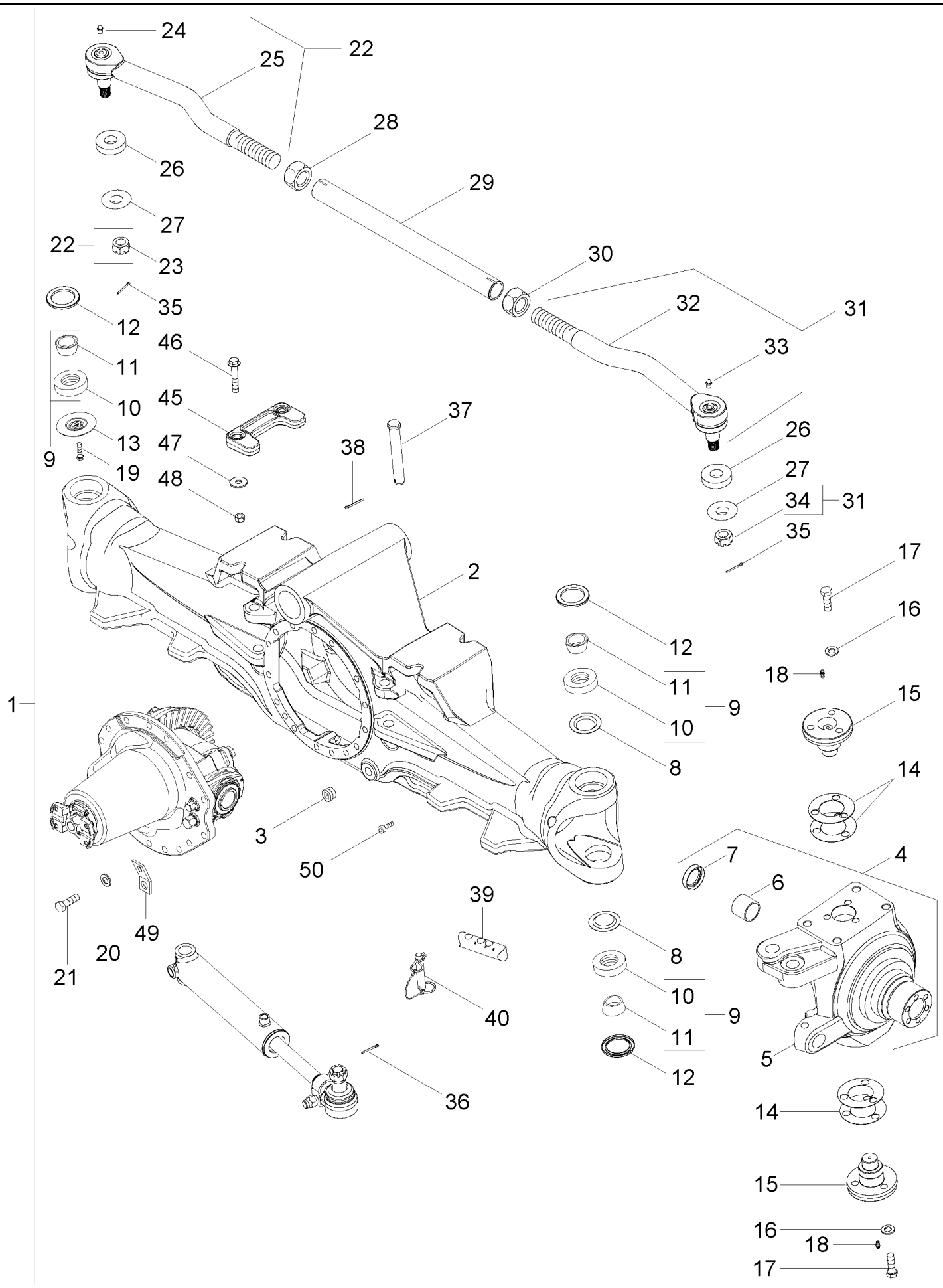

SERIAL NUMBER IS FOR THE MFD AXLE

MX285 CASE IH MAGNUM TRACTOR (NORTH AMERICA)

05-20A MFD AXLE HOUSING ASSEMBLY - STANDARD WITH 12 BOLT HUB, WITH DIFFERENTIAL LOCK, ASN MY00193740

ссылка	Номер детали	Кол-во	Описание
1	87454946	1	AXLE, Complete With Differential And Planetaries, Inc. 2 - 52
2	87404249	1	HOUSING,
3	221-887	2	PLUG, 3/4
4	292564A2	1	KNUCKLE, STEERING, Right Hand, Inc. 5 - 7
4	292560A2	1	KNUCKLE, STEERING, Left Hand, Inc. 5 - 7
5	NSS	1	NOT SERVICED SEPARATELY, Knuckle, Housing
6	235628A1	1	BUSHING,
7	128647A1	1	SEAL,
8	281937A1	3	RETAINER,
9	368728A1	4	BEARING, Inc. 10, 11
10	NSS	1	NOT SERVICED SEPARATELY, Ring, Inner
11	NSS	1	NOT SERVICED SEPARATELY, Ring, Outer
12	281939A1	4	SEAL,
13	87440529	1	RETAINER, If Equipped
14	313557A1	4	KIT, SHIM, Inc. 14
14	NSS	5	NOT SERVICED SEPARATELY, Shim .005
14	NSS	5	NOT SERVICED SEPARATELY, Shim .007
14	NSS	5	NOT SERVICED SEPARATELY, Shim .010
14	NSS	5	NOT SERVICED SEPARATELY, Shim .015
14	NSS	5	NOT SERVICED SEPARATELY, Shim .030
14	NSS	5	NOT SERVICED SEPARATELY, Shim .060
15	378410A1	4	CAP,
16	896-11014	12	WASHER, M12 x 28.5 x 3, HT,
17	627-14045	12	BOLT, Hex, M14 x 45, 10.9, Full Thd,
18	219-1	4	NIPPLE, LUBE, 1/8"-27 x .66 lg,
19	615-6012	1	BOLT, Hex, M6 x 12, 8.8, Full Thd, If Equipped
20	896-11014	16	WASHER, M12 x 28.5 x 3, HT,
21	627-14045	16	BOLT, Hex, M14 x 45, 10.9, Full Thd,
22	87455742	1	BALL JOINT, Left Hand Threads, Inc. 23 - 25
23	87455806	1	NUT, SLOTTED, M22
24	87455807	1	FITTING, Grease
25	NSS	1	NOT SERVICED SEPARATELY, Ball Joint Left Hand
26	NSS	1	NOT SERVICED SEPARATELY, Retainer
27	NSS	1	NOT SERVICED SEPARATELY, Retainer
28	87455741	1	NUT, M38, Left Hand Threads
29	87455737	1	TUBE,
30	87455739	1	NUT, M38, Right Hand Threads
31	87455743	1	BALL JOINT, Right Hand Threads, Inc. 32 - 34
32	NSS	1	NOT SERVICED SEPARATELY, Ball Joint Right Hand
33	87455807	1	FITTING, Grease
34	87455806	1	NUT, SLOTTED, M22
35	432-820	2	PIN, SPLIT (COTTER), 1/8" x 1 1/4",
36	432-820	2	PIN, SPLIT (COTTER), 1/8" x 1 1/4",
37	292565A1	2	PIN, LARGE,
38	733-4032	2	PIN, SPLIT (COTTER), M4 x 32,

SERIAL NUMBER IS FOR THE MFD AXLE

MX285 CASE IH MAGNUM TRACTOR (NORTH AMERICA)

05-20A MFD AXLE HOUSING ASSEMBLY - STANDARD WITH 12 BOLT HUB, WITH DIFFERENTIAL LOCK, ASN MY00193740

сылка	Номер детали	Кол-во	Описание
39	281914A1	2	ROD, Steering Stop, Short, 3 Hole
40	87404993	2	PIN, AXLE,
45	297333A2	2	BLOCK ASSY.,
46	844-12070	4	BOLT, Hex Flg, M12x 70, 8.8,
47	495-21069	4	WASHER, 5/8",
48	829-1412	4	NUT, M12, Cl 10,
49	352782A1	1	STRAP,
50	863-8020	2	SCREW, Hex Soc Hd, M8 x 20, 12.9,
51	87433501	2	BUSHING, (Not Shown)
52	353-77	8	PLUG, Cap, .576" OD, (Not Shown)

SERIAL NUMBER IS FOR THE MFD AXLE

MX285 CASE IH MAGNUM TRACTOR (NORTH AMERICA)

05-22 MFD AXLE HOUSING ASSEMBLY - SUSPENDED WITH 12 BOLT HUB, WITHOUT DIFFERENTIAL LOCK, BSN MY00136378

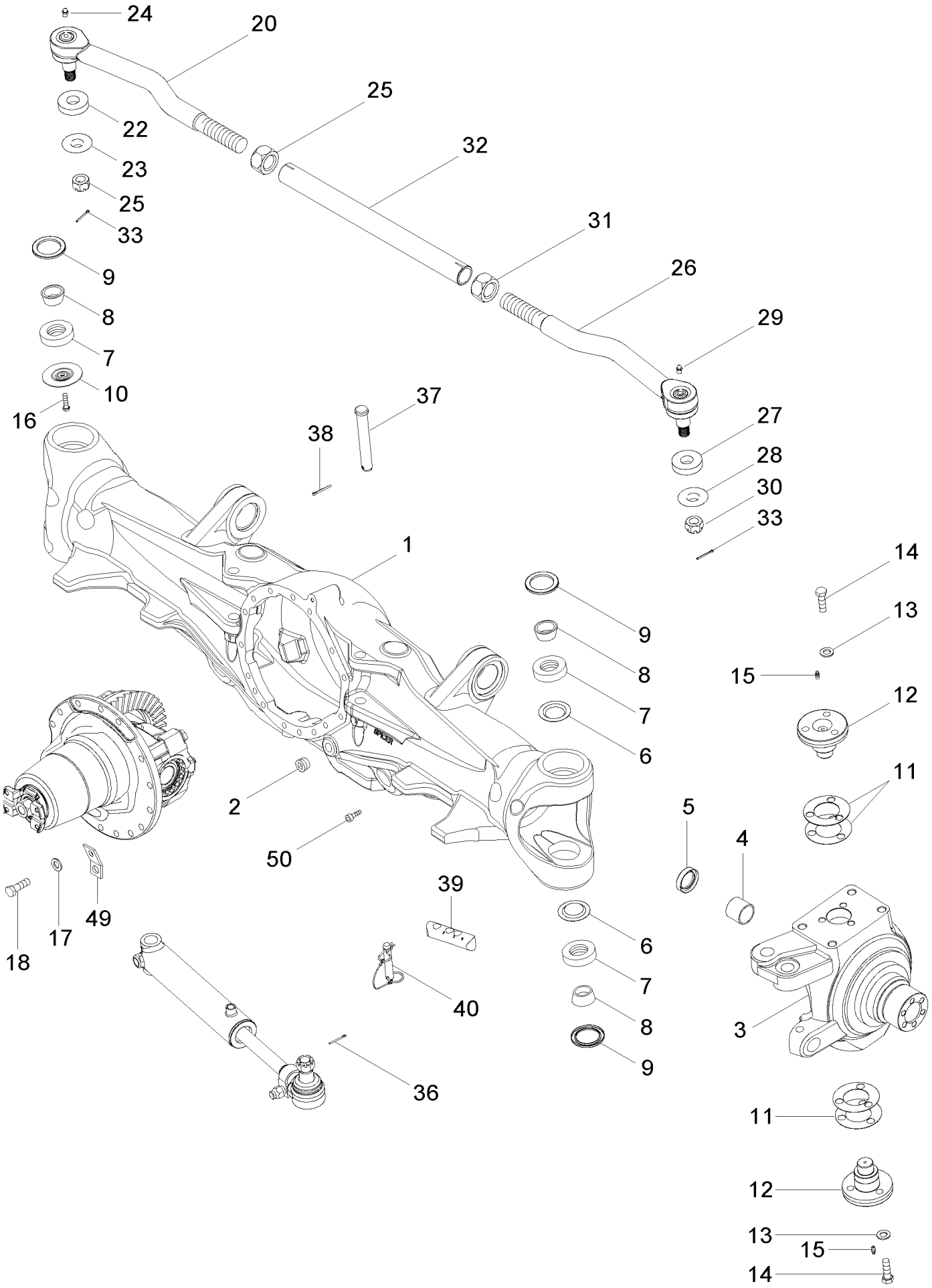

USED FOR ALL MFD AXLE SERIAL NUMBERS STARTING WITH FUSA, GUSA, and MUSA.USED FOR MFD AXLE SERIAL NUMBERS BEFORE MY00136378

MX285 CASE IH MAGNUM TRACTOR (NORTH AMERICA)

05-22 MFD AXLE HOUSING ASSEMBLY - SUSPENDED WITH 12 BOLT HUB, WITHOUT DIFFERENTIAL LOCK, BSN MY00136378

ссылка	Номер детали	Кол-во	Описание
	396442A6	1	AXLE ASSY, 4WD, Complete With Differential And Planetaries
1	87404290	1	HOUSING, AXLE,
2	221-887	2	PLUG, 3/4
3	292564A2	1	KNUCKLE, STEERING, Right Hand
3	292560A2	1	KNUCKLE, STEERING, Left Hand
4	235628A1	1	BUSHING,
5	128647A1	1	SEAL,
6	281937A1	3	RETAINER,
	368728A1	4	BEARING, Inc. 7, 8
7	NSS	1	NOT SERVICED SEPARATELY, Ring, Inner
8	NSS	1	NOT SERVICED SEPARATELY, Ring, Outer
9	281939A1	4	SEAL,
10	281937A1	1	RETAINER, If Equipped (Not Shown)
10	87440529	1	RETAINER, If Equipped (Shown)
	313557A1	1	KIT, SHIM, Inc. 11
11	NSS	5	NOT SERVICED SEPARATELY, Shim
11	NSS	5	NOT SERVICED SEPARATELY, Shim
11	NSS	5	NOT SERVICED SEPARATELY, Shim
11	NSS	5	NOT SERVICED SEPARATELY, Shim
11	NSS	5	NOT SERVICED SEPARATELY, Shim
11	NSS	5	NOT SERVICED SEPARATELY, Shim
12	378410A1	4	CAP,
13	896-11014	12	WASHER, M12 x 28.5 x 3, HT, 15,5 x 28 x 3 mm
14	627-14045	12	BOLT, Hex, M14 x 45, 10.9, Full Thd, M14 x 45; 10,9
15	219-1	4	NIPPLE, LUBE, 1/8"-27 x .66 lg,
16	86977726	1	SCREW, Hex, M6 x 12, 8.8, M6 x 12; 8.8, If Equipped
17	896-11014	16	WASHER, M12 x 28.5 x 3, HT, 15,5 x 28 x 3 mm
18	627-14045	16	BOLT, Hex, M14 x 45, 10.9, Full Thd, M14 x 45; 10,9
20	311169A2	1	BALL JOINT, Left Hand Threads, Inc. 21 - 24, BSN FUSA6700000
20	87455742	1	BALL JOINT, Left Hand Threads, Inc. 21 - 24, ASN FUSA6700000
	333617A1	1	KIT, GASKET, Inc. 21, 22, BSN FUSA6700000
	87455748	1	KIT, Inc. 21, 22, ASN FUSA6700000
21	NSS	1	NOT SERVICED SEPARATELY, Boot
22	NSS	1	NOT SERVICED SEPARATELY, Spacer
23	429-1314	1	NUT, SLOTTED, 7/8"-14, G8, 7/8 NF; 8, BSN FUSA6700000
23	87455806	1	NUT, SLOTTED, M22, ASN FUSA6700000
24	219-6	1	NIPPLE, LUBE, 1/4"-28 x .54" lg, Grease 1/4 str, BSN FUSA6700000
24	87455807	1	FITTING, Grease, ASN FUSA6700000
25	311168A1	1	NUT, 1-1/2, Left Hand Threads, BSN FUSA6700000
25	87455741	1	NUT, M38, Left Hand Threads, ASN FUSA6700000
26	311170A2	1	BALL JOINT, Right Hand Threads, Inc. 27 - 30, BSN FUSA6700000
26	87455743	1	BALL JOINT, Right Hand Threads, Inc. 27 - 30, ASN FUSA6700000
	333617A1	1	KIT, GASKET, Inc. 27, 28, BSN FUSA6700000
	87455748	1	KIT, Inc. 27, 28, ASN FUSA6700000
27	NSS	1	NOT SERVICED SEPARATELY, Boot

USED FOR ALL MFD AXLE SERIAL NUMBERS STARTING WITH FUSA, GUSA, and MUSA.USED FOR MFD AXLE SERIAL NUMBERS BEFORE MY00136378

MX285 CASE IH MAGNUM TRACTOR (NORTH AMERICA)

05-22 MFD AXLE HOUSING ASSEMBLY - SUSPENDED WITH 12 BOLT HUB, WITHOUT DIFFERENTIAL LOCK, BSN MY00136378

сылка	Номер детали	Кол-во	Описание
28	NSS	1	NOT SERVICED SEPARATELY, Spacer
29	219-6	1	NIPPLE, LUBE, 1/4"-28 x .54" lg, Grease 1/4 str, BSN FUSA6700000
29	87455807	1	FITTING, Grease, ASN FUSA6700000
30	429-1314	1	NUT, SLOTTED, 7/8"-14, G8, 7/8 NF; 8, BSN FUSA6700000
30	87455806	1	NUT, SLOTTED, M22, ASN FUSA6700000
31	311167A1	1	NUT, 1-1/2, Right Hand Threads, BSN FUSA6700000
31	87455739	1	NUT, M38, Right Hand Threads, ASN FUSA6700000
32	311166A1	1	TUBE, , BSN FUSA6700000
32	87455737	1	TUBE, , ASN FUSA6700000
33	432-820	2	PIN, SPLIT (COTTER), 1/8" x 1 1/4", 1/8" x 1-1/4"
36	432-820	2	PIN, SPLIT (COTTER), 1/8" x 1 1/4", 1/8" x 1-1/4"
37	87406480	2	PIN,
38	733-4032	2	PIN, SPLIT (COTTER), M4 x 32, 4 x 32 mm
39	281914A1	2	ROD, Steering Stop, Short, 3 Hole (Shown)
39	451995A1	2	ROD, ADJUSTMENT, Steering Stop, Long, 4 Hole (Not Shown)
40	87404993	2	PIN, AXLE,
49	352782A1	1	STRAP,
50	863-8020	2	SCREW, Hex Soc Hd, M8 x 20, 12.9, M8 x 20; 12.9

USED FOR ALL MFD AXLE SERIAL NUMBERS STARTING WITH FUSA, GUSA, and MUSA.USED FOR MFD AXLE SERIAL NUMBERS BEFORE MY00136378

MX285 CASE IH MAGNUM TRACTOR (NORTH AMERICA)

05-22A MFD AXLE HOUSING ASSEMBLY - SUSPENDED WITH 12 BOLT HUB, WITHOUT DIFFERENTIAL LOCK, ASN MY00195684

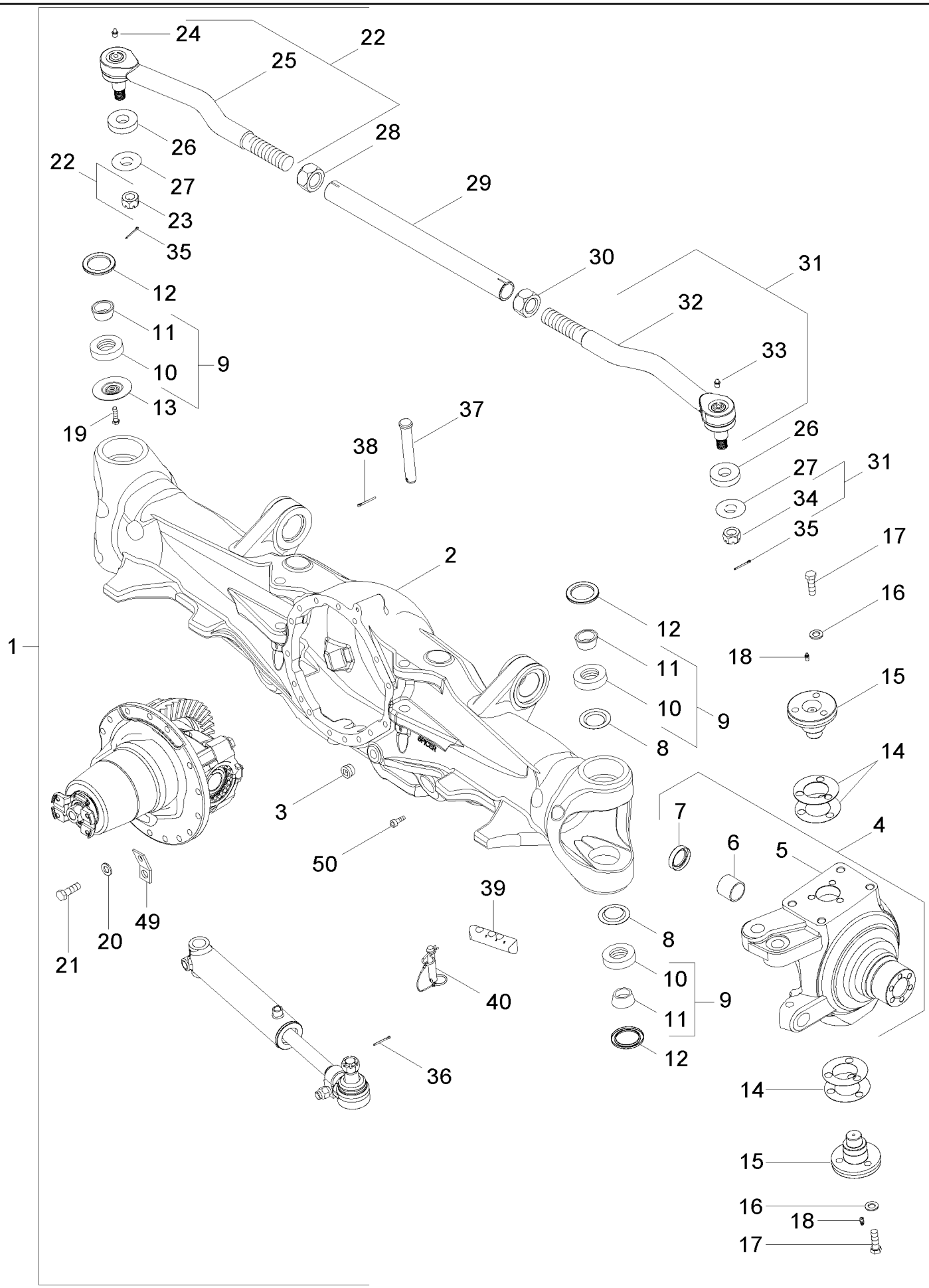

SERIAL NUMBER IS FOR THE MFD AXLE

MX285 CASE IH MAGNUM TRACTOR (NORTH AMERICA)

05-22A MFD AXLE HOUSING ASSEMBLY - SUSPENDED WITH 12 BOLT HUB, WITHOUT DIFFERENTIAL LOCK, ASN MY00195684

ссылка	Номер детали	Кол-во	Описание
1	87454943	1	AXLE, Complete With Differential And Planetaries, Inc. 2 - 52
2	87404290	1	HOUSING, AXLE,
3	221-887	2	PLUG, 3/4
4	292564A2	1	KNUCKLE, STEERING, Right Hand, Inc. 5 - 7
4	292560A2	1	KNUCKLE, STEERING, Left Hand, Inc. 5 - 7
5	NSS	1	NOT SERVICED SEPARATELY, Knuckle, Housing
6	235628A1	1	BUSHING,
7	128647A1	1	SEAL,
8	281937A1	3	RETAINER,
9	368728A1	4	BEARING, Inc. 10, 11
10	NSS	1	NOT SERVICED SEPARATELY, Ring, Inner
11	NSS	1	NOT SERVICED SEPARATELY, Ring, Outer
12	281939A1	4	SEAL,
13	87440529	1	RETAINER, If Equipped
14	313557A1	4	KIT, SHIM, Inc. 14
14	NSS	5	NOT SERVICED SEPARATELY, Shim .005
14	NSS	5	NOT SERVICED SEPARATELY, Shim .007
14	NSS	5	NOT SERVICED SEPARATELY, Shim .010
14	NSS	5	NOT SERVICED SEPARATELY, Shim .015
14	NSS	5	NOT SERVICED SEPARATELY, Shim .030
14	NSS	5	NOT SERVICED SEPARATELY, Shim .060
15	378410A1	4	CAP,
16	896-11014	12	WASHER, M12 x 28.5 x 3, HT,
17	627-14045	12	BOLT, Hex, M14 x 45, 10.9, Full Thd,
18	219-1	4	NIPPLE, LUBE, 1/8"-27 x .66 lg,
19	615-6012	1	BOLT, Hex, M6 x 12, 8.8, Full Thd, If Equipped
20	896-11014	16	WASHER, M12 x 28.5 x 3, HT,
21	627-14045	16	BOLT, Hex, M14 x 45, 10.9, Full Thd,
22	87455742	1	BALL JOINT, Left Hand Threads, Inc. 23 - 25
23	87455806	1	NUT, SLOTTED, M22
24	87455807	1	FITTING, Grease
25	NSS	1	NOT SERVICED SEPARATELY, Ball Joint Left Hand
26	NSS	1	NOT SERVICED SEPARATELY, Retainer
27	NSS	1	NOT SERVICED SEPARATELY, Retainer
28	87455741	1	NUT, M38, Left Hand Threads
29	87455737	1	TUBE,
30	87455739	1	NUT, M38, Right Hand Threads
31	87455743	1	BALL JOINT, Right Hand Threads, Inc. 32 - 34
32	NSS	1	NOT SERVICED SEPARATELY, Ball Joint Right Hand
33	87455807	1	FITTING, Grease
34	87455806	1	NUT, SLOTTED, M22
35	432-820	2	PIN, SPLIT (COTTER), 1/8" x 1 1/4",
36	432-820	2	PIN, SPLIT (COTTER), 1/8" x 1 1/4",
37	87406480	2	PIN,
38	733-4032	2	PIN, SPLIT (COTTER), M4 x 32,

SERIAL NUMBER IS FOR THE MFD AXLE

MX285 CASE IH MAGNUM TRACTOR (NORTH AMERICA)

05-22A MFD AXLE HOUSING ASSEMBLY - SUSPENDED WITH 12 BOLT HUB, WITHOUT DIFFERENTIAL LOCK, ASN MY00195684

ссылка	Номер детали	Кол-во	Описание
39	281914A1	2	ROD, Steering Stop, Short, 3 Hole
40	87404993	2	PIN, AXLE,
49	352782A1	1	STRAP,
50	863-8020	2	SCREW, Hex Soc Hd, M8 x 20, 12.9,
51	87433501	2	BUSHING, (Not Shown)
52	353-77	8	PLUG, Cap, .576" OD, (Not Shown)

SERIAL NUMBER IS FOR THE MFD AXLE

MX285 CASE IH MAGNUM TRACTOR (NORTH AMERICA)

05-24 MFD AXLE HOUSING ASSEMBLY - SUSPENDED WITH 12 BOLT HUB, WITH DIFFERENTIAL LOCK, BSN MY00178966

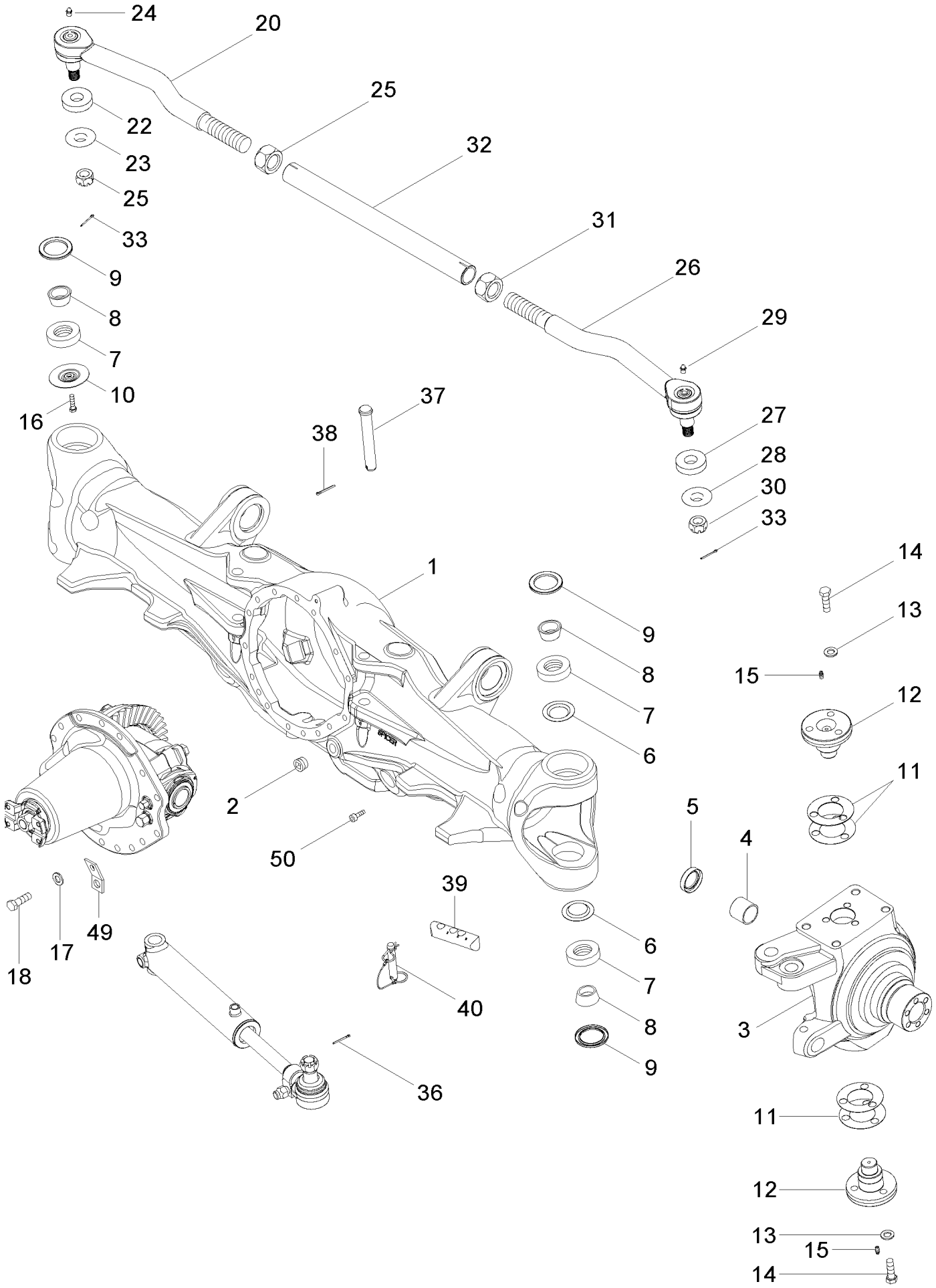

USED FOR ALL MFD AXLE SERIAL NUMBERS STARTING WITH FUSA, GUSA, and MUSA.□USED FOR MFD AXLE SERIAL NUMBERS BEFORE MY00178966

MX285 CASE IH MAGNUM TRACTOR (NORTH AMERICA)

05-24 MFD AXLE HOUSING ASSEMBLY - SUSPENDED WITH 12 BOLT HUB, WITH DIFFERENTIAL LOCK, BSN MY00178966

ссылка	Номер детали	Кол-во	Описание
	407300A6	1	AXLE ASSY, 4WD, Complete With Differential And Planetaries
1	87404290	1	HOUSING, AXLE,
2	221-887	2	PLUG, 3/4
3	292564A2	1	KNUCKLE, STEERING, Right Hand
3	292560A2	1	KNUCKLE, STEERING, Left Hand
4	235628A1	1	BUSHING,
5	128647A1	1	SEAL,
6	281937A1	3	RETAINER,
	368728A1	4	BEARING, Inc. 7, 8
7	NSS	1	NOT SERVICED SEPARATELY, Ring, Inner
8	NSS	1	NOT SERVICED SEPARATELY, Ring, Outer
9	281939A1	4	SEAL,
10	281937A1	1	RETAINER, If Equipped (Not Shown)
10	87440529	1	RETAINER, If Equipped (Shown)
	313557A1	1	KIT, SHIM, Inc. 11
11	NSS	5	NOT SERVICED SEPARATELY, Shim
11	NSS	5	NOT SERVICED SEPARATELY, Shim
11	NSS	5	NOT SERVICED SEPARATELY, Shim
11	NSS	5	NOT SERVICED SEPARATELY, Shim
11	NSS	5	NOT SERVICED SEPARATELY, Shim
11	NSS	5	NOT SERVICED SEPARATELY, Shim
12	378410A1	4	CAP,
13	896-11014	12	WASHER, M12 x 28.5 x 3, HT, 15,5 x 28 x 3 mm
14	627-14045	12	BOLT, Hex, M14 x 45, 10.9, Full Thd, M14 x 45; 10,9
15	219-1	4	NIPPLE, LUBE, 1/8"-27 x .66 lg,
16	86977726	1	SCREW, Hex, M6 x 12, 8.8, M6 x 12; 8.8, If Equipped
17	896-11014	16	WASHER, M12 x 28.5 x 3, HT, 15,5 x 28 x 3 mm
18	627-14045	16	BOLT, Hex, M14 x 45, 10.9, Full Thd, M14 x 45; 10,9
20	311169A2	1	BALL JOINT, Left Hand Threads, Inc. 21 - 24, BSN FUSA6400017
20	87455742	1	BALL JOINT, Left Hand Threads, Inc. 21 - 24, ASN FUSA6400017
	333617A1	1	KIT, GASKET, Inc. 21, 22, BSN FUSA6400017
	87455748	1	KIT, Inc. 21, 22, ASN FUSA6400017
21	NSS	1	NOT SERVICED SEPARATELY, Boot
22	NSS	1	NOT SERVICED SEPARATELY, Spacer
23	429-1314	1	NUT, SLOTTED, 7/8"-14, G8, 7/8 NF; 8, BSN FUSA6400017
23	87455806	1	NUT, SLOTTED, M22, ASN FUSA6400017
24	219-6	1	NIPPLE, LUBE, 1/4"-28 x .54" lg, Grease 1/4 str, BSN FUSA6400017
24	87455807	1	FITTING, Grease, ASN FUSA6400017
25	311168A1	1	NUT, 1-1/2, Left Hand Threads, BSN FUSA6400017
25	87455741	1	NUT, M38, Left Hand Threads, ASN FUSA6400017
26	311170A2	1	BALL JOINT, Right Hand Threads, Inc. 27 - 30, BSN FUSA6400017
26	87455743	1	BALL JOINT, Right Hand Threads, Inc. 27 - 30, ASN FUSA6400017
	333617A1	1	KIT, GASKET, Inc. 27, 28, BSN FUSA6400017
	87455748	1	KIT, Inc. 27, 28, ASN FUSA6400017
27	NSS	1	NOT SERVICED SEPARATELY, Boot

USED FOR ALL MFD AXLE SERIAL NUMBERS STARTING WITH FUSA, GUSA, and MUSA.USED FOR MFD AXLE SERIAL NUMBERS BEFORE MY00178966

MX285 CASE IH MAGNUM TRACTOR (NORTH AMERICA)

05-24 MFD AXLE HOUSING ASSEMBLY - SUSPENDED WITH 12 BOLT HUB, WITH DIFFERENTIAL LOCK, BSN MY00178966

сылка	Номер детали	Кол-во	Описание
28	NSS	1	NOT SERVICED SEPARATELY, Spacer
29	219-6	1	NIPPLE, LUBE, 1/4"-28 x .54" lg, Grease 1/4 str, BSN FUSA6400017
29	87455807	1	FITTING, Grease, ASN FUSA6400017
30	429-1314	1	NUT, SLOTTED, 7/8"-14, G8, 7/8 NF; 8, BSN FUSA6400017
30	87455806	1	NUT, SLOTTED, M22, ASN FUSA6400017
31	311167A1	1	NUT, 1-1/2, Right Hand Threads, BSN FUSA6400017
31	87455739	1	NUT, M38, Right Hand Threads, ASN FUSA6400017
32	311166A1	1	TUBE, , BSN FUSA6400017
32	87455737	1	TUBE, , ASN FUSA6400017
33	432-820	2	PIN, SPLIT (COTTER), 1/8" x 1 1/4", 1/8" x 1-1/4"
36	432-820	2	PIN, SPLIT (COTTER), 1/8" x 1 1/4", 1/8" x 1-1/4"
37	87406480	2	PIN,
38	733-4032	2	PIN, SPLIT (COTTER), M4 x 32, 4 x 32 mm
39	281914A1	2	ROD, Steering Stop, Short, 3 Hole (Shown)
39	451995A1	2	ROD, ADJUSTMENT, Steering Stop, Long, 4 Hole (Not Shown)
40	87404993	2	PIN, AXLE,
49	352782A1	1	STRAP,
50	863-8020	2	SCREW, Hex Soc Hd, M8 x 20, 12.9, M8 x 20; 12.9

USED FOR ALL MFD AXLE SERIAL NUMBERS STARTING WITH FUSA, GUSA, and MUSA.USED FOR MFD AXLE SERIAL NUMBERS BEFORE MY00178966

MX285 CASE IH MAGNUM TRACTOR (NORTH AMERICA)

05-24A MFD AXLE HOUSING ASSEMBLY - SUSPENDED WITH 12 BOLT HUB, WITH DIFFERENTIAL LOCK, ASN MY00184588

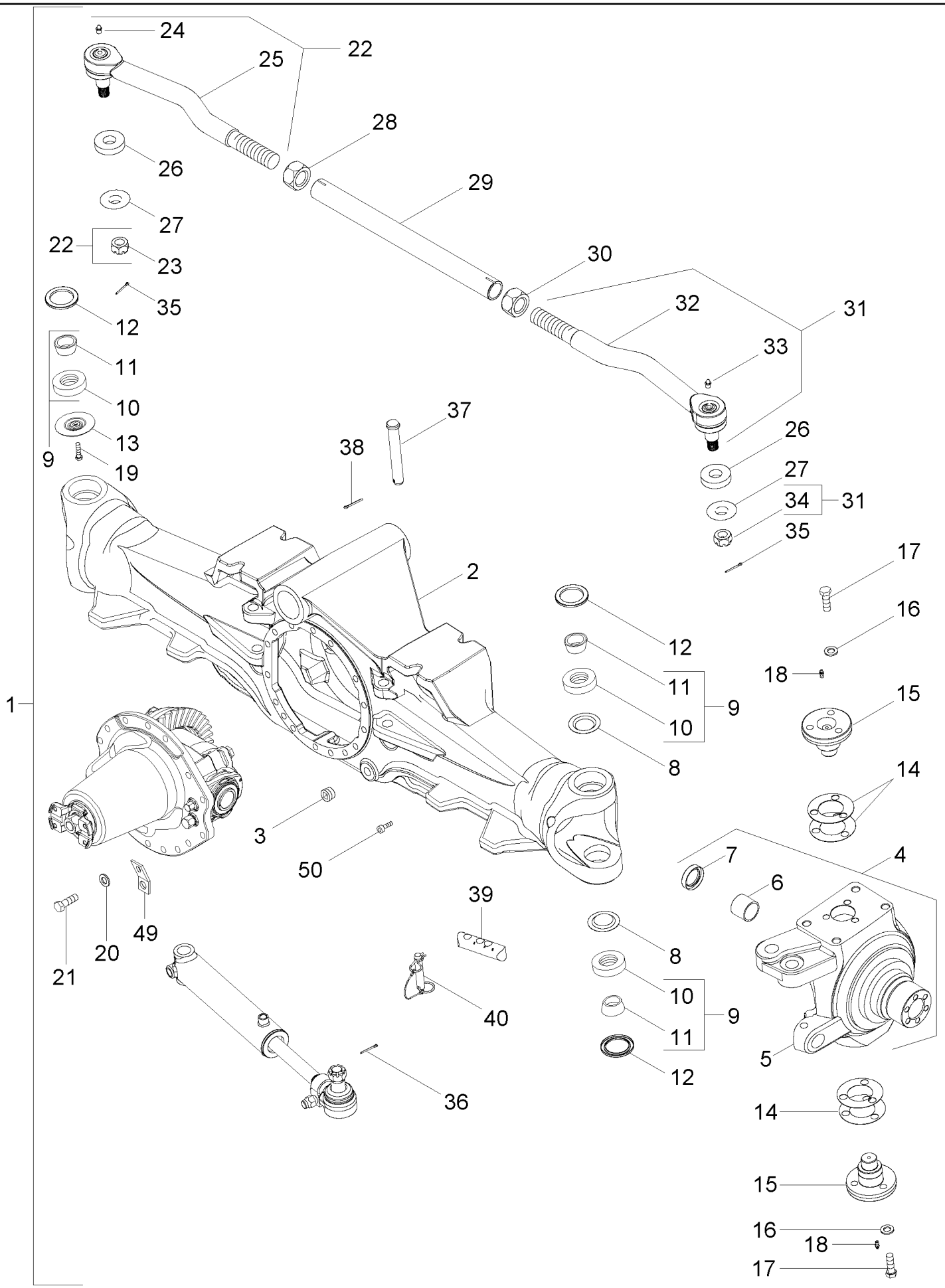

SERIAL NUMBER IS FOR THE MFD AXLE

MX285 CASE IH MAGNUM TRACTOR (NORTH AMERICA)

05-24A MFD AXLE HOUSING ASSEMBLY - SUSPENDED WITH 12 BOLT HUB, WITH DIFFERENTIAL LOCK, ASN MY00184588

ссылка	Номер детали	Кол-во	Описание
1	87454944	1	AXLE, Complete With Differential And Planetaries, Inc. 2 - 52
2	87404290	1	HOUSING, AXLE,
3	221-887	2	PLUG, 3/4
4	292564A2	1	KNUCKLE, STEERING, Right Hand, Inc. 5 - 7
4	292560A2	1	KNUCKLE, STEERING, Left Hand, Inc. 5 - 7
5	NSS	1	NOT SERVICED SEPARATELY, Knuckle, Housing
6	235628A1	1	BUSHING,
7	128647A1	1	SEAL,
8	281937A1	3	RETAINER,
9	368728A1	4	BEARING, Inc. 10, 11
10	NSS	1	NOT SERVICED SEPARATELY, Ring, Inner
11	NSS	1	NOT SERVICED SEPARATELY, Ring, Outer
12	281939A1	4	SEAL,
13	87440529	1	RETAINER, If Equipped
14	313557A1	4	KIT, SHIM, Inc. 14
14	NSS	5	NOT SERVICED SEPARATELY, Shim .005
14	NSS	5	NOT SERVICED SEPARATELY, Shim .007
14	NSS	5	NOT SERVICED SEPARATELY, Shim .010
14	NSS	5	NOT SERVICED SEPARATELY, Shim .015
14	NSS	5	NOT SERVICED SEPARATELY, Shim .030
14	NSS	5	NOT SERVICED SEPARATELY, Shim .060
15	378410A1	4	CAP,
16	896-11014	12	WASHER, M12 x 28.5 x 3, HT,
17	627-14045	12	BOLT, Hex, M14 x 45, 10.9, Full Thd,
18	219-1	4	NIPPLE, LUBE, 1/8"-27 x .66 lg,
19	615-6012	1	BOLT, Hex, M6 x 12, 8.8, Full Thd, If Equipped
20	896-11014	16	WASHER, M12 x 28.5 x 3, HT,
21	627-14045	16	BOLT, Hex, M14 x 45, 10.9, Full Thd,
22	87455742	1	BALL JOINT, Left Hand Threads, Inc. 23 - 25
23	87455806	1	NUT, SLOTTED, M22
24	87455807	1	FITTING, Grease
25	NSS	1	NOT SERVICED SEPARATELY, Ball Joint Left Hand
26	NSS	1	NOT SERVICED SEPARATELY, Retainer
27	NSS	1	NOT SERVICED SEPARATELY, Retainer
28	87455741	1	NUT, M38, Left Hand Threads
29	87455737	1	TUBE,
30	87455739	1	NUT, M38, Right Hand Threads
31	87455743	1	BALL JOINT, Right Hand Threads, Inc. 32 - 34
32	NSS	1	NOT SERVICED SEPARATELY, Ball Joint Right Hand
33	87455807	1	FITTING, Grease
34	87455806	1	NUT, SLOTTED, M22
35	432-820	2	PIN, SPLIT (COTTER), 1/8" x 1 1/4",
36	432-820	2	PIN, SPLIT (COTTER), 1/8" x 1 1/4",
37	87406480	2	PIN,
38	733-4032	2	PIN, SPLIT (COTTER), M4 x 32,

SERIAL NUMBER IS FOR THE MFD AXLE

MX285 CASE IH MAGNUM TRACTOR (NORTH AMERICA)

05-24A MFD AXLE HOUSING ASSEMBLY - SUSPENDED WITH 12 BOLT HUB, WITH DIFFERENTIAL LOCK, ASN MY00184588

ссылка	Номер детали	Кол-во	Описание
39	281914A1	2	ROD, Steering Stop, Short, 3 Hole
40	87404993	2	PIN, AXLE,
49	352782A1	1	STRAP,
50	863-8020	2	SCREW, Hex Soc Hd, M8 x 20, 12.9,
51	87433501	2	BUSHING, (Not Shown)
52	353-77	8	PLUG, Cap, .576" OD, (Not Shown)

SERIAL NUMBER IS FOR THE MFD AXLE

MX285 CASE IH MAGNUM TRACTOR (NORTH AMERICA)

05-26 FRONT AXLE KING PIN WITH ACCUGUIDE

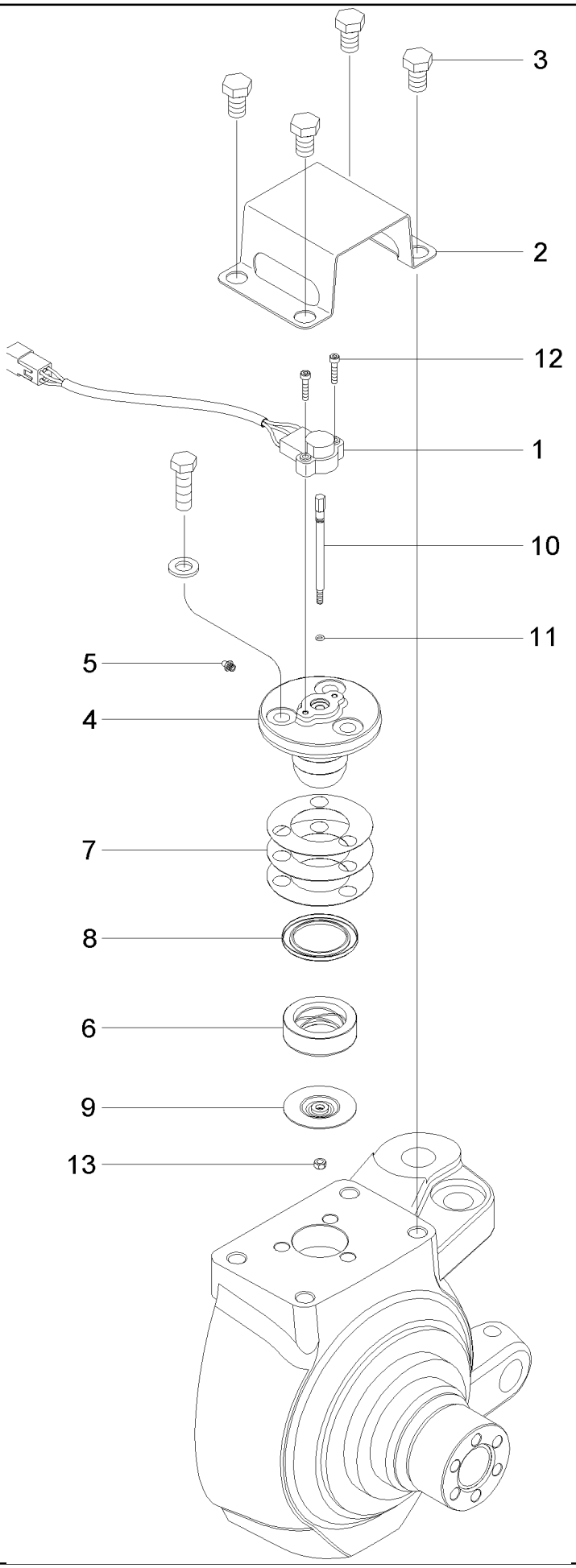

MX285 CASE IH MAGNUM TRACTOR (NORTH AMERICA)

05-26 FRONT AXLE KING PIN WITH ACCUGUIDE

ссылка	Номер детали	Кол-во	Описание
1	87435594	1	SENSOR,
2	87438044	1	COVER,
3	614-16025	4	BOLT, Hex, M16 x 25, 8.8, Full Thd, Hex, M16 x 25, 8.8, Full Thd
	87428336	1	PIN, King, Inc. 4 - 13, With 10 Bolt Hub
	87428422	1	PIN, King, Inc. 4 - 13, With 12 Bolt Hub
4	NSS	1	NOT SERVICED SEPARATELY, Cap Assembly, With 10 Bolt Hub
4	NSS	1	NOT SERVICED SEPARATELY, Cap Assembly, With 12 Bolt Hub
5	87404994	1	FITTING, Grease
6	377919A1	1	BEARING, , With 10 Bolt Hub
6	368728A1	1	BEARING, , With 12 Bolt Hub
7	310960A1	1	KIT, SHIM, , With 10 Bolt Hub
7	313557A1	1	KIT, SHIM, , With 12 Bolt Hub
8	1277270C1	1	SEAL, OIL, , With 10 Bolt Hub
8	281939A1	1	SEAL, , With 12 Bolt Hub
9	87440524	1	RETAINER, Grease, With 10 Bolt Hub
9	87440529	1	RETAINER, Grease, With 12 Bolt Hub
10	87440522	1	SHAFT, , With 10 Bolt Hub
10	87440528	1	SHAFT, , With 12 Bolt Hub
11	238-5008	1	O-RING, -008, 70 Duro, .176" ID x .070" Thk,
12	864-5025	2	SCREW, Hex Soc Hd, M5 x 25, 8.8, M5 x 28; 8,8
13	825-1406	1	NUT, M6, Cl 8,

MX285 CASE IH MAGNUM TRACTOR (NORTH AMERICA)

05-27 FRONT AXLE DRIVE SHAFT - MFD, WITHOUT DIFFERENTIAL LOCK

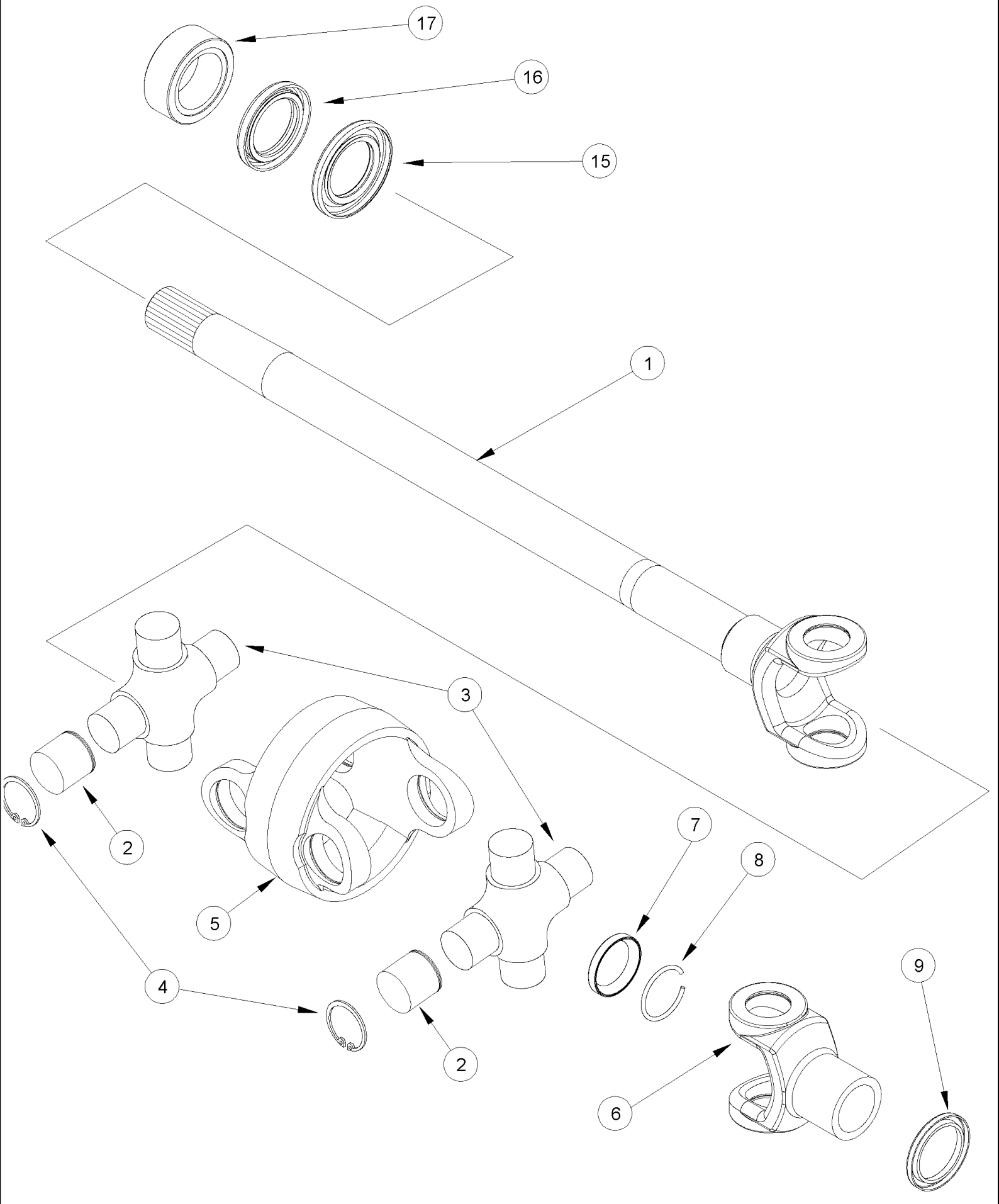

MX285 CASE IH MAGNUM TRACTOR (NORTH AMERICA)

05-27 FRONT AXLE DRIVE SHAFT - MFD, WITHOUT DIFFERENTIAL LOCK

ссылка	Номер детали	Кол-во	Описание
	395734A1	1	HALF SHAFT, Right Hand, Shown, Inc. 1 - 9
	395735A1	1	AXLE, Left Hand, Inc. 1 - 9
1	395741A1	1	SHAFT, LONG, Right Hand
1	395743A1	1	SHAFT, LONG, Left Hand
	395738A1	2	KIT, FIP, Inc. 2 - 4
2	NSS	4	NOT SERVICED SEPARATELY, Cup
3	NSS	1	NOT SERVICED SEPARATELY, Joint, Universal
4	NSS	4	NOT SERVICED SEPARATELY, Ring, Retaining
5	395740A1	1	YOKE,
6	395737A1	1	YOKE, Inc. 7 - 9
7	1961753C1	1	SEAL,
8	1277405C1	1	RING,
9	1287608C1	1	SEAL,
15	302957A1	2	SEAL, OIL,
16	302956A1	2	SEAL, OIL,
17	302958A1	2	BUSHING, LARGE,

MX285 CASE IH MAGNUM TRACTOR (NORTH AMERICA)

05-28 FRONT AXLE DRIVE SHAFT - MFD, WITH DIFFERENTIAL LOCK, BSN

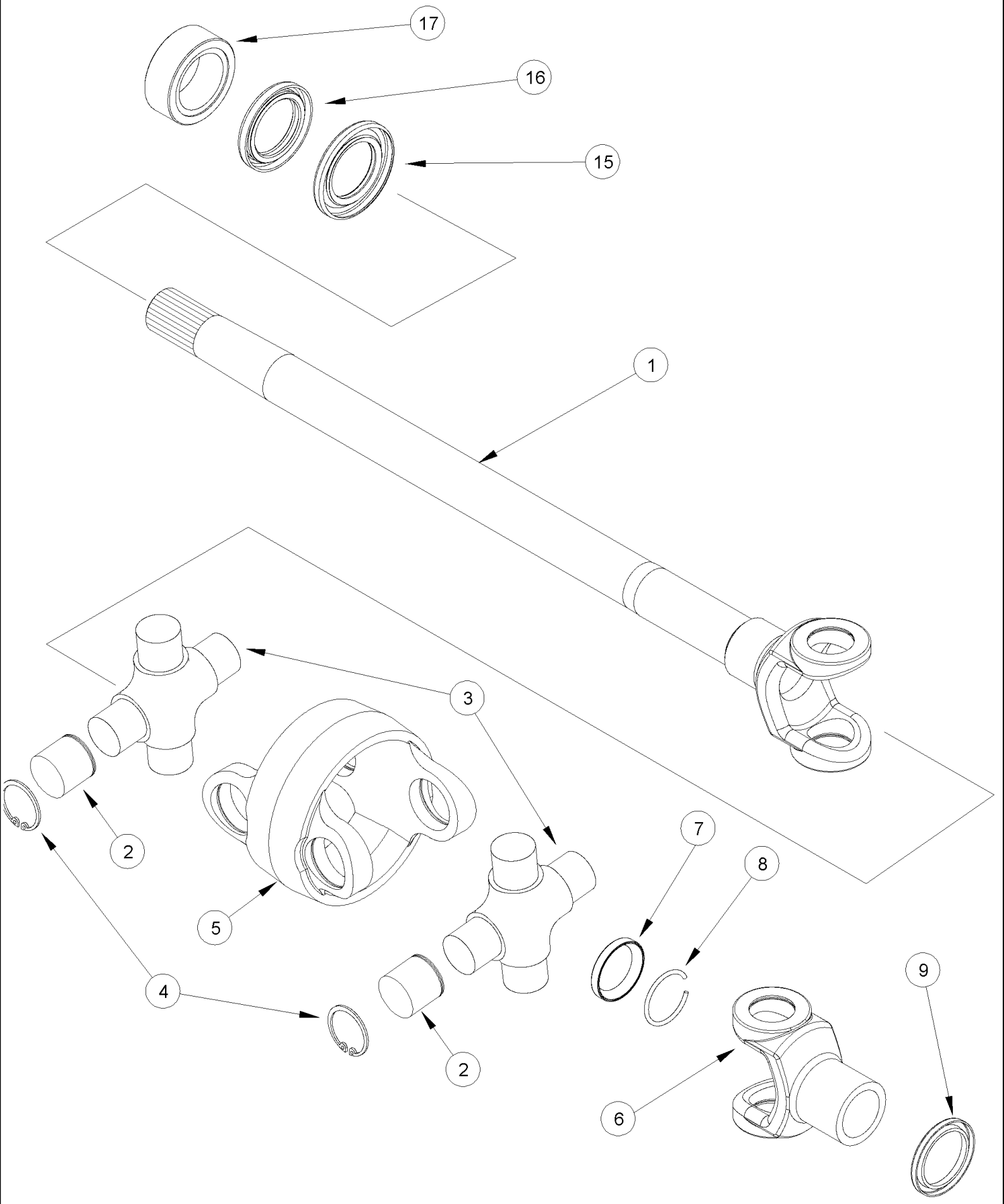

USED FOR ALL MFD AXLE SERIAL NUMBERS STARTING WITH FUSA, GUSA, and MUSA EQUIPPED WITH DIFFERENTIAL LOCK.
USED FOR MFD AXLE 407298A6 BSN MY00182861, AXLE 407300A6 BSN MY00178966, AXLE 407310A6 BSN MY00164725, AXLE 407312A6 BSN MY00182905

MX285 CASE IH MAGNUM TRACTOR (NORTH AMERICA)

05-28 FRONT AXLE DRIVE SHAFT - MFD, WITH DIFFERENTIAL LOCK, BSN

ссылка	Номер детали	Кол-во	Описание
	87404999	1	AXLE-SHAFT, ARTICULATED, Right Hand, Shown, Inc. 1 - 9
	87405000	1	AXLE-SHAFT, ARTICULATED, Left Hand, Inc. 1 - 9
1	87405212	1	SHAFT, LONG, Right Hand
1	87405211	1	SHAFT, LONG, Left Hand
	395738A1	2	KIT, FIP, Inc. 2 - 4
2	NSS	4	NOT SERVICED SEPARATELY, Cup
3	NSS	1	NOT SERVICED SEPARATELY, Joint, Universal
4	NSS	4	NOT SERVICED SEPARATELY, Ring, Retaining
5	395740A1	1	YOKE,
6	395737A1	1	YOKE, Inc. 7 - 9
7	1961753C1	1	SEAL,
8	1277405C1	1	RING,
9	1287608C1	1	SEAL,
15	302957A1	2	SEAL, OIL,
16	302956A1	2	SEAL, OIL,
17	302958A1	2	BUSHING, LARGE,

USED FOR ALL MFD AXLE SERIAL NUMBERS STARTING WITH FUSA, GUSA, and MUSA EQUIPPED WITH DIFFERENTIAL LOCK.
USED FOR MFD AXLE 407298A6 BSN MY00182861, AXLE 407300A6 BSN MY00178966, AXLE 407310A6 BSN MY00164725, AXLE 407312A6 BSN MY00182905

MX285 CASE IH MAGNUM TRACTOR (NORTH AMERICA)

05-28A FRONT AXLE DRIVE SHAFT - MFD, WITH DIFFERENTIAL LOCK, ASN

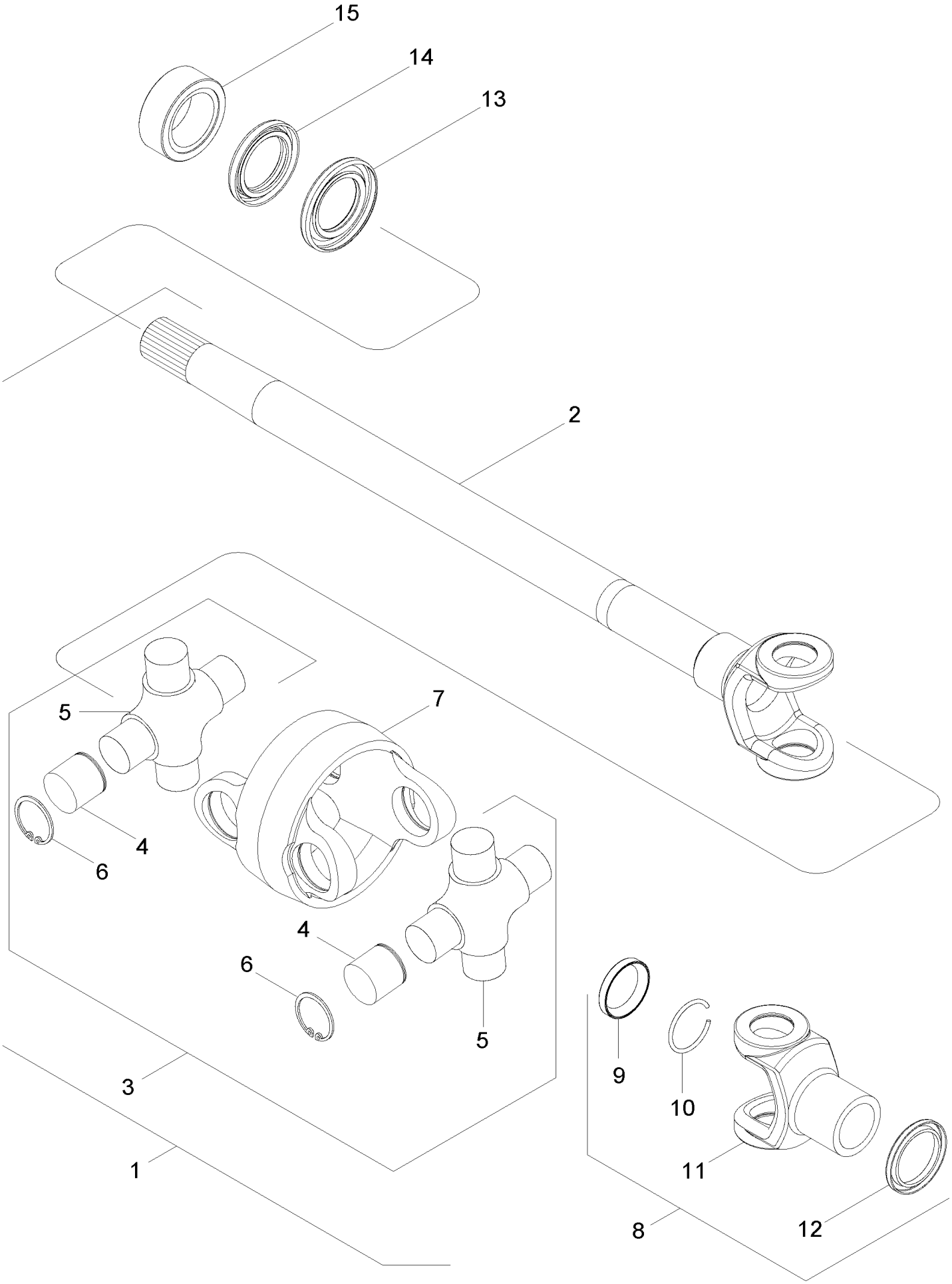

SERIAL NUMBER IS FOR THE MFD AXLE. USED FOR MFD AXLE 87307642 ASN MY00183034, 87307644 ASN MY00195879, 87454944 ASN MY00184588, 87454946 ASN MY00184591.

MX285 CASE IH MAGNUM TRACTOR (NORTH AMERICA)

05-28A FRONT AXLE DRIVE SHAFT - MFD, WITH DIFFERENTIAL LOCK, ASN

ссылка	Номер детали	Кол-во	Описание
1	87324476	1	AXLE-SHAFT, ARTICULATED, Right Hand, Shown, Inc. 2 - 12
1	87324477	1	AXLE-SHAFT, ARTICULATED, Left Hand, Inc. 2 - 12
2	87325892	1	SHAFT, LONG, Right Hand
2	87307641	1	SHAFT, LONG, Left Hand
3	395738A1	2	KIT, FIP, Inc. 4 - 6
4	NSS	4	NOT SERVICED SEPARATELY, Cup
5	NSS	1	NOT SERVICED SEPARATELY, Joint, Universal
6	NSS	4	NOT SERVICED SEPARATELY, Ring, Retaining
7	395740A1	1	YOKE,
8	395737A1	1	YOKE, Inc. 9 - 12
9	1961753C1	1	SEAL,
10	1277405C1	1	RING,
11	NSS	1	NOT SERVICED SEPARATELY, Yoke
12	1287608C1	1	SEAL,
13	302957A1	2	SEAL, OIL,
14	302956A1	2	SEAL, OIL,
15	302958A1	2	BUSHING, LARGE,

SERIAL NUMBER IS FOR THE MFD AXLE. USED FOR MFD AXLE 87307642 ASN MY00183034, 87307644 ASN MY00195879, 87454944 ASN MY00184588, 87454946 ASN MY00184591.

MX285 CASE IH MAGNUM TRACTOR (NORTH AMERICA)

05-30 CARRIER AND DIFFERENTIAL - MFD, 12 BOLT HUB, WITHOUT DIFFERENTIAL LOCK, BSN

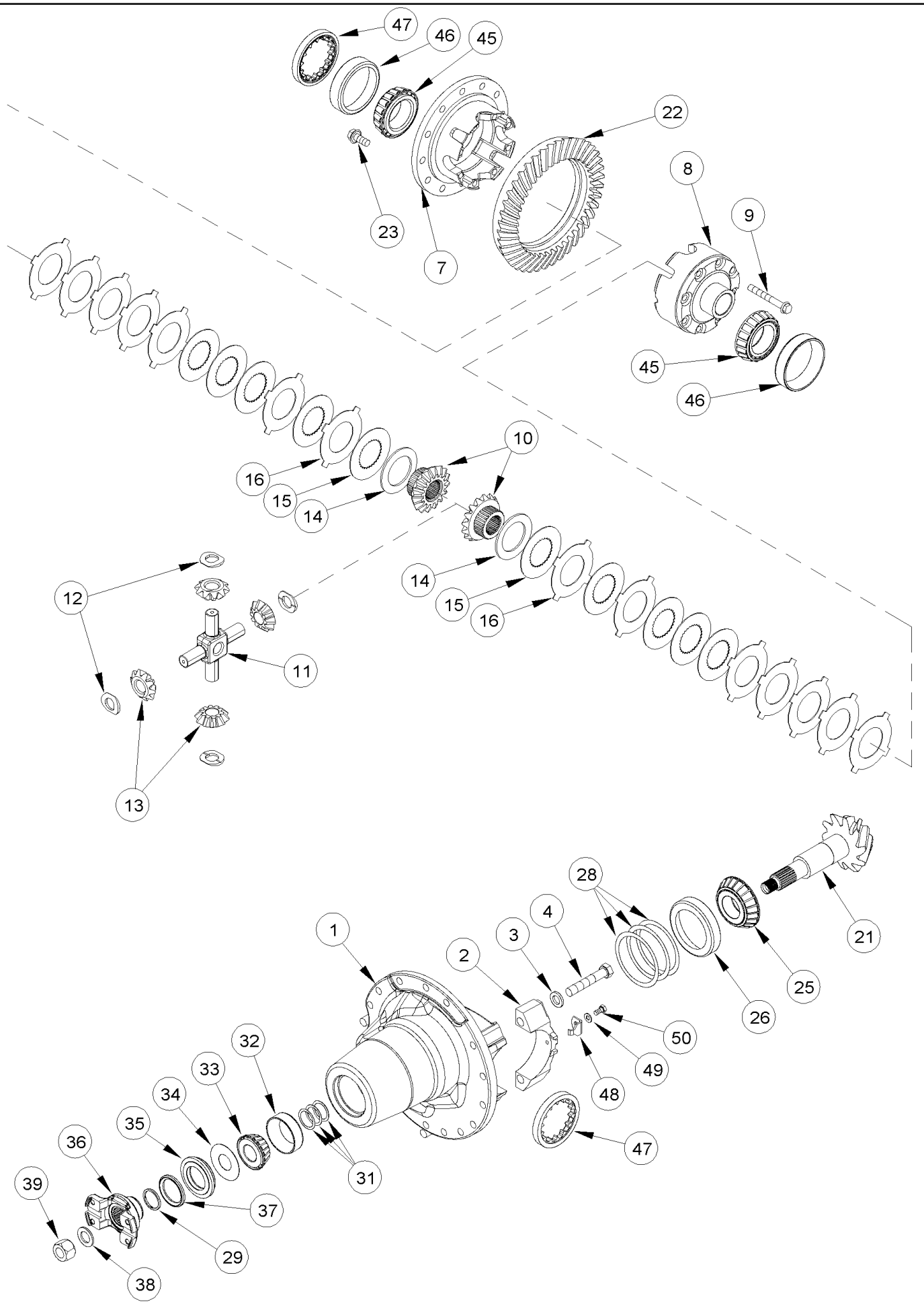

USED FOR ALL MFD AXLES 412303A6 AND 396442A6 AXLE SERIAL NUMBERS STARTING WITH FUSA, GUSA, and MUSA. USED FOR MFD AXLE 412303A6 BSN MY00184570, USED FOR MFD AXLE 396442A6 BSN MY00136378.

MX285 CASE IH MAGNUM TRACTOR (NORTH AMERICA)

05-30 CARRIER AND DIFFERENTIAL - MFD, 12 BOLT HUB, WITHOUT DIFFERENTIAL LOCK, BSN

ссылка	Номер детали	Кол-во	Описание
	87404092	1	CARRIER, Inc. 1 - 50
1	87404057	1	CARRIER, Inc. 2 - 4
2	NSS	2	NOT SERVICED SEPARATELY, Cap
3	896-12016	4	WASHER, M17.5 x 30 x 4, HT, 17,5 x 30 x 4 mm
4	828-16090	4	BOLT, Hex, M16 x 90, 10.9, M16 x 90; 10.9
	345688A4	1	DIFFERENTIAL, Inc. 7 - 16
7	NSS	1	NOT SERVICED SEPARATELY, Housing
8	NSS	1	NOT SERVICED SEPARATELY, Housing
9	1997853C1	8	BOLT,
	377176A3	1	KIT, Inc. 10 - 16
10	NSS	2	NOT SERVICED SEPARATELY, Gear
11	NSS	1	NOT SERVICED SEPARATELY, Shaft
12	NSS	4	NOT SERVICED SEPARATELY, Washer, Thrust
13	NSS	4	NOT SERVICED SEPARATELY, Gear
	377177A3	1	KIT, Inc. 14 - 16
14	NSS	2	NOT SERVICED SEPARATELY, Plate
15	NSS	10	NOT SERVICED SEPARATELY, Disc, Friction
16	NSS	14	NOT SERVICED SEPARATELY, Plate
	321516A1	1	BEVEL GEAR, Inc. 21,22
21	NSS	1	NOT SERVICED SEPARATELY, Shaft, Pinion
22	NSS	1	NOT SERVICED SEPARATELY, Ring, Gear
23	H136416	12	SCREW,
25	315421A1	1	BEARING, CONE,
26	315422A1	1	BEARING, CUP,
	1277229C1	1	PACKAGE, Inc. 28
28	NSS	5	NOT SERVICED SEPARATELY, Shim
28	NSS	5	NOT SERVICED SEPARATELY, Shim
28	NSS	5	NOT SERVICED SEPARATELY, Shim
29	251189A1	1	SPACER,
	318504A1	1	KIT, SHIM, Inc. 31
31	NSS	1	NOT SERVICED SEPARATELY, Shim
31	NSS	1	NOT SERVICED SEPARATELY, Shim
31	NSS	1	NOT SERVICED SEPARATELY, Shim
31	NSS	1	NOT SERVICED SEPARATELY, Shim
31	NSS	1	NOT SERVICED SEPARATELY, Shim
31	NSS	1	NOT SERVICED SEPARATELY, Shim
31	NSS	1	NOT SERVICED SEPARATELY, Shim
31	NSS	1	NOT SERVICED SEPARATELY, Shim
31	NSS	1	NOT SERVICED SEPARATELY, Shim
31	NSS	1	NOT SERVICED SEPARATELY, Shim
31	NSS	1	NOT SERVICED SEPARATELY, Shim
32	315424A1	1	BEARING, CUP,
33	315423A1	1	BEARING, CONE,
34	318845A1	1	SLINGER,
35	H758326	1	SEAL ASSY.,
36	87402730	1	YOKE, Inc. 37

USED FOR ALL MFD AXLES 412303A6 AND 396442A6 AXLE SERIAL NUMBERS STARTING WITH FUSA, GUSA, and MUSA. USED FOR MFD AXLE 412303A6 BSN MY00184570, USED FOR MFD AXLE 396442A6 BSN MY00136378.

MX285 CASE IH MAGNUM TRACTOR (NORTH AMERICA)

05-30 CARRIER AND DIFFERENTIAL - MFD, 12 BOLT HUB, WITHOUT DIFFERENTIAL LOCK, BSN

сылка	Номер детали	Кол-во	Описание
37	345427C1	1	SLINGER,
38	H224501	1	WASHER, 7/8 inch
39	232-46314	1	NUT, LOCK, 7/8"-14, GC,
45	1968291C1	2	BEARING,
46	1968292C1	2	BEARING,
47	1277233C1	2	RING,
48	1277234C1	2	CLEVIS,
49	496-11034	2	WASHER, 11/32" x 11/16" x 1/16", HDN, 11/32 x 11/16 x 1/16
50	628-8016	2	BOLT, Hex, M8 x 16, 10.9, Full Thd, M8 x 16; 10.9

USED FOR ALL MFD AXLES 412303A6 AND 396442A6 AXLE SERIAL NUMBERS STARTING WITH FUSA, GUSA, and MUSA. USED FOR MFD AXLE 412303A6 BSN MY00184570, USED FOR MFD AXLE 396442A6 BSN MY00136378.

MX285 CASE IH MAGNUM TRACTOR (NORTH AMERICA)

05-30A CARRIER AND DIFFERENTIAL - MFD, 12 BOLT HUB, WITHOUT DIFFERENTIAL LOCK, ASN

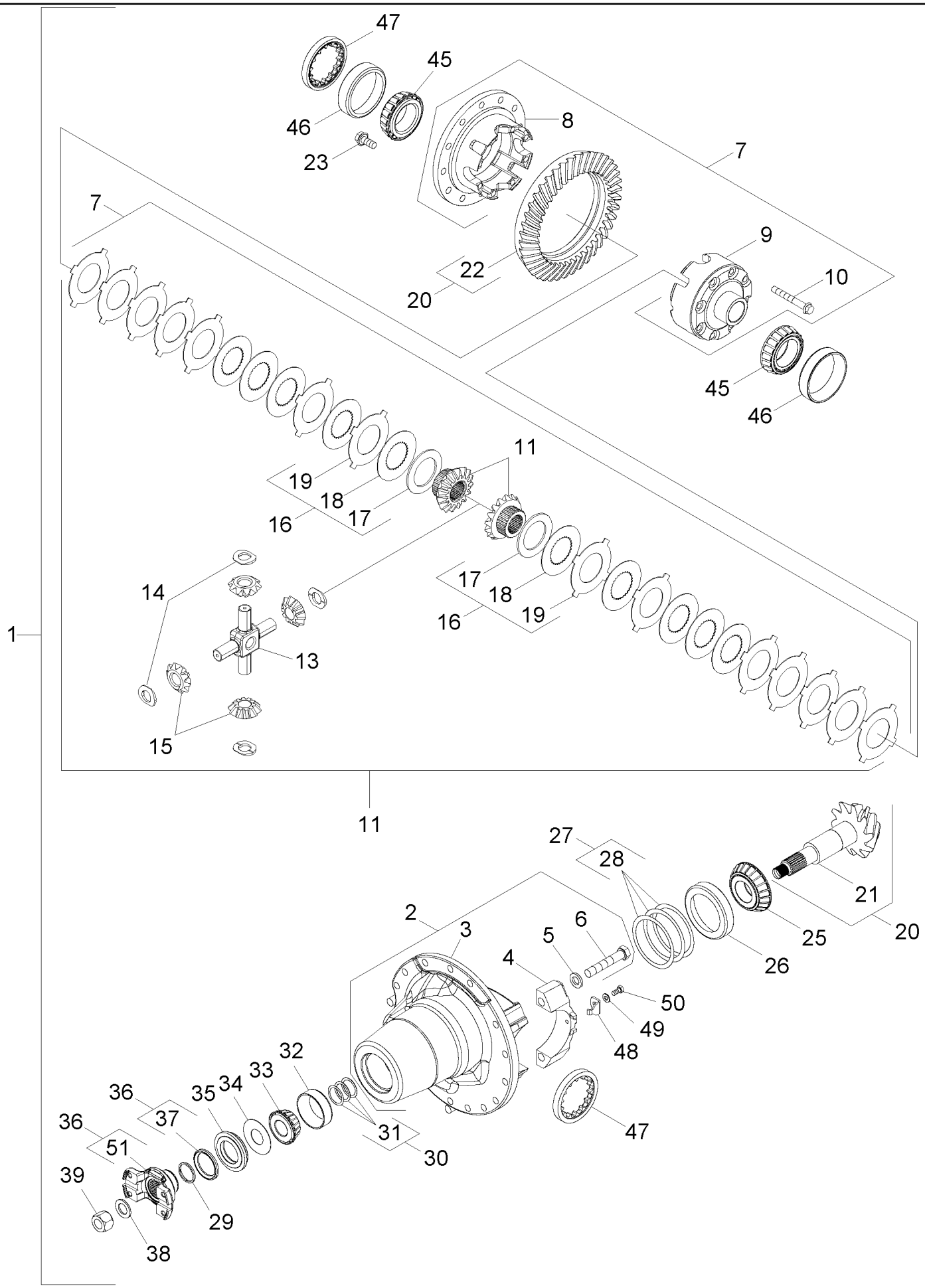

SERIAL NUMBER IS FOR THE MFD AXLE. USED FOR MFD AXLE 87454943 ASN MY00195684, 87454945 ASN MY00195744.

MX285 CASE IH MAGNUM TRACTOR (NORTH AMERICA)

05-30A CARRIER AND DIFFERENTIAL - MFD, 12 BOLT HUB, WITHOUT DIFFERENTIAL LOCK, ASN

сылка	Номер детали	Кол-во	Описание
1	87324564	1	CARRIER, Inc. 2 - 50
2	87324561	1	CARRIER, Inc. 3 - 6
3	NSS	1	NOT SERVICED SEPARATELY, Housing
4	NSS	2	NOT SERVICED SEPARATELY, Cap
5	896-12016	4	WASHER, M17.5 x 30 x 4, HT,
6	828-16090	4	BOLT, Hex, M16 x 90, 10.9,
7	345688A4	1	DIFFERENTIAL, Inc. 8 - 19
8	NSS	1	NOT SERVICED SEPARATELY, Housing
9	NSS	1	NOT SERVICED SEPARATELY, Housing
10	1997853C1	8	BOLT,
11	377176A3	1	KIT, Inc. 12 - 19
12	NSS	2	NOT SERVICED SEPARATELY, Gear
13	NSS	1	NOT SERVICED SEPARATELY, Shaft
14	NSS	4	NOT SERVICED SEPARATELY, Washer, Thrust
15	NSS	4	NOT SERVICED SEPARATELY, Gear
16	377177A3	1	KIT, Inc. 17 - 19
17	NSS	2	NOT SERVICED SEPARATELY, Plate
18	NSS	10	NOT SERVICED SEPARATELY, Disc, Friction
19	NSS	14	NOT SERVICED SEPARATELY, Plate
20	87324538	1	BEVEL GEAR, Inc. 21,22
21	NSS	1	NOT SERVICED SEPARATELY, Shaft, Pinion
22	NSS	1	NOT SERVICED SEPARATELY, Ring, Gear
23	H136416	12	SCREW,
25	87324516	1	BEARING, CONE,
26	87324517	1	BEARING, CUP,
28	87324518	1	KIT, SHIM, Inc. 28
28	NSS	5	NOT SERVICED SEPARATELY, Shim .003
28	NSS	5	NOT SERVICED SEPARATELY, Shim .005
28	NSS	5	NOT SERVICED SEPARATELY, Shim .010
29	251189A1	1	SPACER,
31	87324536	1	KIT, SHIM, Inc. 31
31	NSS	1	NOT SERVICED SEPARATELY, Shim .010
31	NSS	1	NOT SERVICED SEPARATELY, Shim .014
31	NSS	1	NOT SERVICED SEPARATELY, Shim .015
31	NSS	1	NOT SERVICED SEPARATELY, Shim .016
31	NSS	1	NOT SERVICED SEPARATELY, Shim .018
31	NSS	1	NOT SERVICED SEPARATELY, Shim .020
31	NSS	1	NOT SERVICED SEPARATELY, Shim .021
31	NSS	1	NOT SERVICED SEPARATELY, Shim .022
31	NSS	1	NOT SERVICED SEPARATELY, Shim .023
31	NSS	1	NOT SERVICED SEPARATELY, Shim .030
32	87324534	1	BEARING, CONE,
33	87324532	1	BEARING, CUP,
34	87324540	1	SLINGER,
35	87324542	1	SEAL, OIL,

SERIAL NUMBER IS FOR THE MFD AXLE. USED FOR MFD AXLE 87454943 ASN MY00195684, 87454945 ASN MY00195744.

MX285 CASE IH MAGNUM TRACTOR (NORTH AMERICA)

05-30A CARRIER AND DIFFERENTIAL - MFD, 12 BOLT HUB, WITHOUT DIFFERENTIAL LOCK, ASN

ссылка	Номер детали	Кол-во	Описание
36	87324528	1	YOKE, Inc. 37, 51
37	87324547	1	DEFLECTOR,
38	87324523	1	WASHER,
39	87324520	1	NUT,
45	1968291C1	2	BEARING,
46	1968292C1	2	BEARING,
47	1277233C1	2	RING,
48	1277234C1	2	CLEVIS,
49	496-11034	2	WASHER, 11/32" x 11/16" x 1/16", HDN, 11/32 x 11/16 x 1/16
50	628-8016	2	BOLT, Hex, M8 x 16, 10.9, Full Thd,
51	NSS	1	NOT SERVICED SEPARATELY, Yoke

SERIAL NUMBER IS FOR THE MFD AXLE. USED FOR MFD AXLE 87454943 ASN MY00195684, 87454945 ASN MY00195744.

MX285 CASE IH MAGNUM TRACTOR (NORTH AMERICA)

05-32 CARRIER AND DIFFERENTIAL - MFD, 12 BOLT HUB, WITH DIFFERENTIAL LOCK, BSN

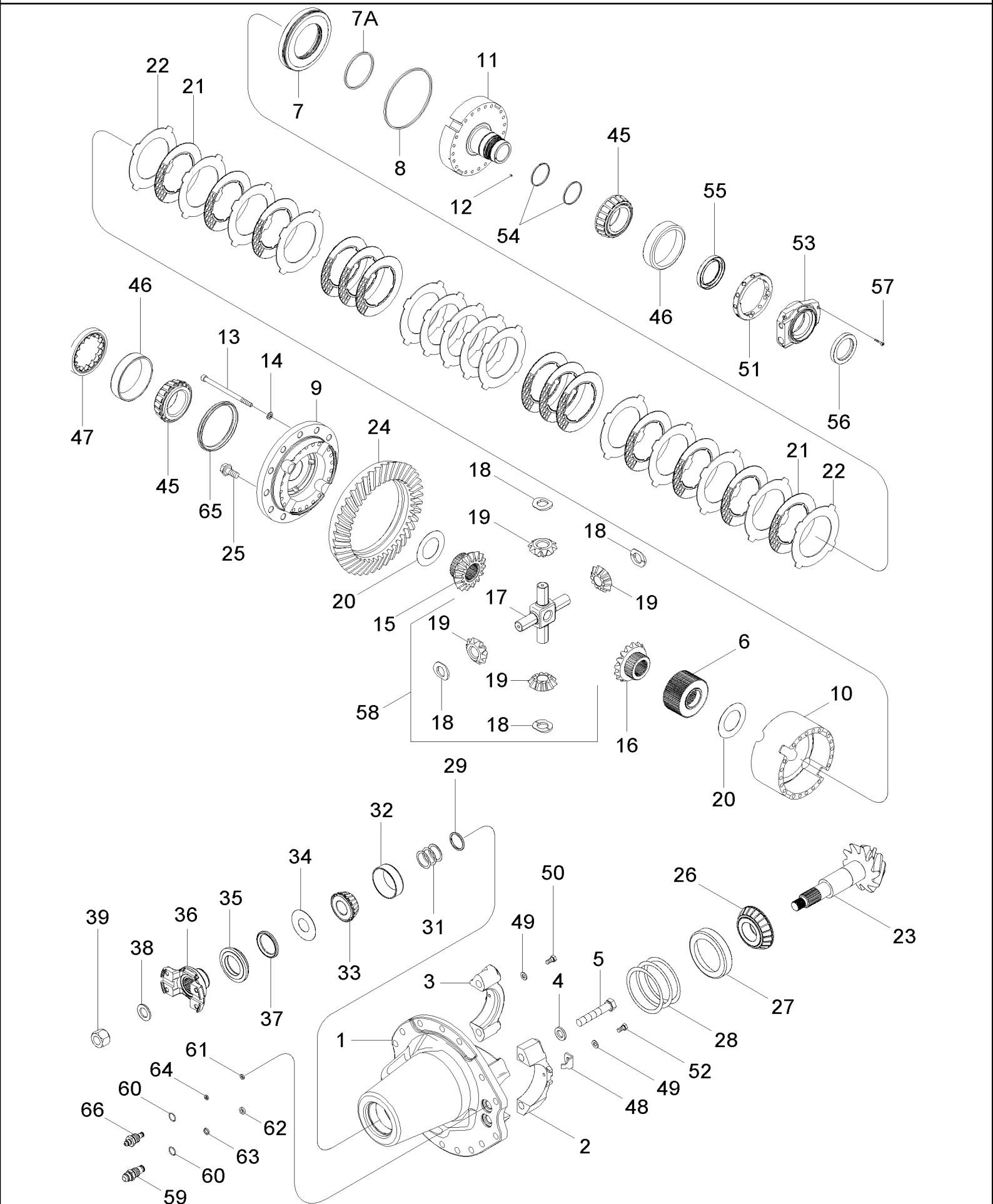

USED FOR ALL MFD AXLES 407300A6 AND 407312A6 AXLE SERIAL NUMBERS STARTING WITH FUSA, GUSA, and MUSA. USED FOR MFD AXLE 407300A6 BSN MY00178966, USED FOR MFD AXLE 407312A6 BSN MY00182905.

MX285 CASE IH MAGNUM TRACTOR (NORTH AMERICA)

05-32 CARRIER AND DIFFERENTIAL - MFD, 12 BOLT HUB, WITH DIFFERENTIAL LOCK, BSN

ссылка	Номер детали	Кол-во	Описание
	87404542	1	CARRIER ASSY., Inc. 1 - 66
1	87404193	1	CARRIER, Inc. 2 - 5
2	NSS	1	NOT SERVICED SEPARATELY, Cap
3	NSS	1	NOT SERVICED SEPARATELY, Cap
4	896-12016	4	WASHER, M17.5 x 30 x 4, HT, 17,5 x 30 x 4 mm
5	828-16090	4	BOLT, Hex, M16 x 90, 10.9, M16 x 90; 10.9
	87404541	1	CASE ASSY., Inc. 6 - 22
6	87404485	1	BLOCK DRIVER,
7	87404477	1	PISTON,
7A	87404468	1	SEAL,
8	87404466	1	SEAL,
	87404545	1	CASE ASSY., Inc. 9 - 14
9	NSS	1	NOT SERVICED SEPARATELY, Flange
10	NSS	1	NOT SERVICED SEPARATELY, Housing
11	NSS	1	NOT SERVICED SEPARATELY, Cap
12	87404998	1	PLUG,
13	87404995	20	SCREW,
14	87404996	20	WASHER,
	87404481	1	KIT, Inc. 15 - 20
15	NSS	1	NOT SERVICED SEPARATELY, Gear
16	NSS	1	NOT SERVICED SEPARATELY, Gear
17	NSS	1	NOT SERVICED SEPARATELY, Shaft
18	NSS	4	NOT SERVICED SEPARATELY, Washer, Thrust
19	NSS	4	NOT SERVICED SEPARATELY, Gear
20	NSS	2	NOT SERVICED SEPARATELY, Washer, Thrust
	87405209	1	KIT, Inc. 20, 21
21	NSS	13	NOT SERVICED SEPARATELY, Disc, Friction
22	NSS	14	NOT SERVICED SEPARATELY, Plate
	321516A1	1	BEVEL GEAR, Inc. 23, 24
23	NSS	1	NOT SERVICED SEPARATELY, Shaft, Pinion
24	NSS	1	NOT SERVICED SEPARATELY, Ring, Gear
25	H136416	12	SCREW,
26	315421A1	1	BEARING, CONE,
27	315422A1	1	BEARING, CUP,
	1277229C1	1	PACKAGE, Inc. 28
28	NSS	5	NOT SERVICED SEPARATELY, Shim
28	NSS	5	NOT SERVICED SEPARATELY, Shim
28	NSS	5	NOT SERVICED SEPARATELY, Shim
29	251189A1	1	SPACER,
	318504A1	1	KIT, SHIM, Inc. 31
31	NSS	1	NOT SERVICED SEPARATELY, Shim
31	NSS	1	NOT SERVICED SEPARATELY, Shim
31	NSS	1	NOT SERVICED SEPARATELY, Shim
31	NSS	1	NOT SERVICED SEPARATELY, Shim
31	NSS	1	NOT SERVICED SEPARATELY, Shim

USED FOR ALL MFD AXLES 407300A6 AND 407312A6 AXLE SERIAL NUMBERS STARTING WITH FUSA, GUSA, and MUSA. USED FOR MFD AXLE 407300A6 BSN MY00178966, USED FOR MFD AXLE 407312A6 BSN MY00182905.

MX285 CASE IH MAGNUM TRACTOR (NORTH AMERICA)

05-32 CARRIER AND DIFFERENTIAL - MFD, 12 BOLT HUB, WITH DIFFERENTIAL LOCK, BSN

сылка	Номер детали	Кол-во	Описание
31	NSS	1	NOT SERVICED SEPARATELY, Shim
31	NSS	1	NOT SERVICED SEPARATELY, Shim
31	NSS	1	NOT SERVICED SEPARATELY, Shim
31	NSS	1	NOT SERVICED SEPARATELY, Shim
31	NSS	1	NOT SERVICED SEPARATELY, Shim
32	315424A1	1	BEARING, CUP,
33	315423A1	1	BEARING, CONE,
34	318845A1	1	SLINGER,
35	H758326	1	SEAL ASSY.,
36	87402730	1	YOKE, Inc. 37
37	345427C1	1	SLINGER,
38	H224501	1	WASHER, 7/8 inch
39	232-46314	1	NUT, LOCK, 7/8"-14, GC,
45	1968291C1	2	BEARING,
46	1968292C1	2	BEARING,
47	1277233C1	1	RING,
48	1277234C1	1	CLEVIS,
49	496-11034	2	WASHER, 11/32" x 11/16" x 1/16", HDN, 11/32 x 11/16 x 1/16
50	628-8016	2	BOLT, Hex, M8 x 16, 10.9, Full Thd, M8 x 16; 10.9
51	87405001	1	NUT, SPECIAL,
52	87404488	1	SCREW,
53	87404997	1	RETAINER, SEAL,
54	87404472	1	RING, PISTON,
55	87404470	1	SEAL,
56	87404469	1	SEAL,
57	87404489	3	SCREW,
58	87404481	1	KIT,
59	87404479	1	COUPLING,
60	87405002	2	O-RING,
61	87404547	1	SEAL,
62	87404548	1	SEAL,
63	87404474	1	BACK-UP RING,
64	87404473	1	BACK-UP RING,
65	87404471	1	SEAL,
66	87404480	1	COUPLING,

USED FOR ALL MFD AXLES 407300A6 AND 407312A6 AXLE SERIAL NUMBERS STARTING WITH FUSA, GUSA, and MUSA. USED FOR MFD AXLE 407300A6 BSN MY00178966, USED FOR MFD AXLE 407312A6 BSN MY00182905.

MX285 CASE IH MAGNUM TRACTOR (NORTH AMERICA)

05-32A CARRIER AND DIFFERENTIAL - MFD, 12 BOLT HUB, WITH DIFFERENTIAL LOCK, ASN

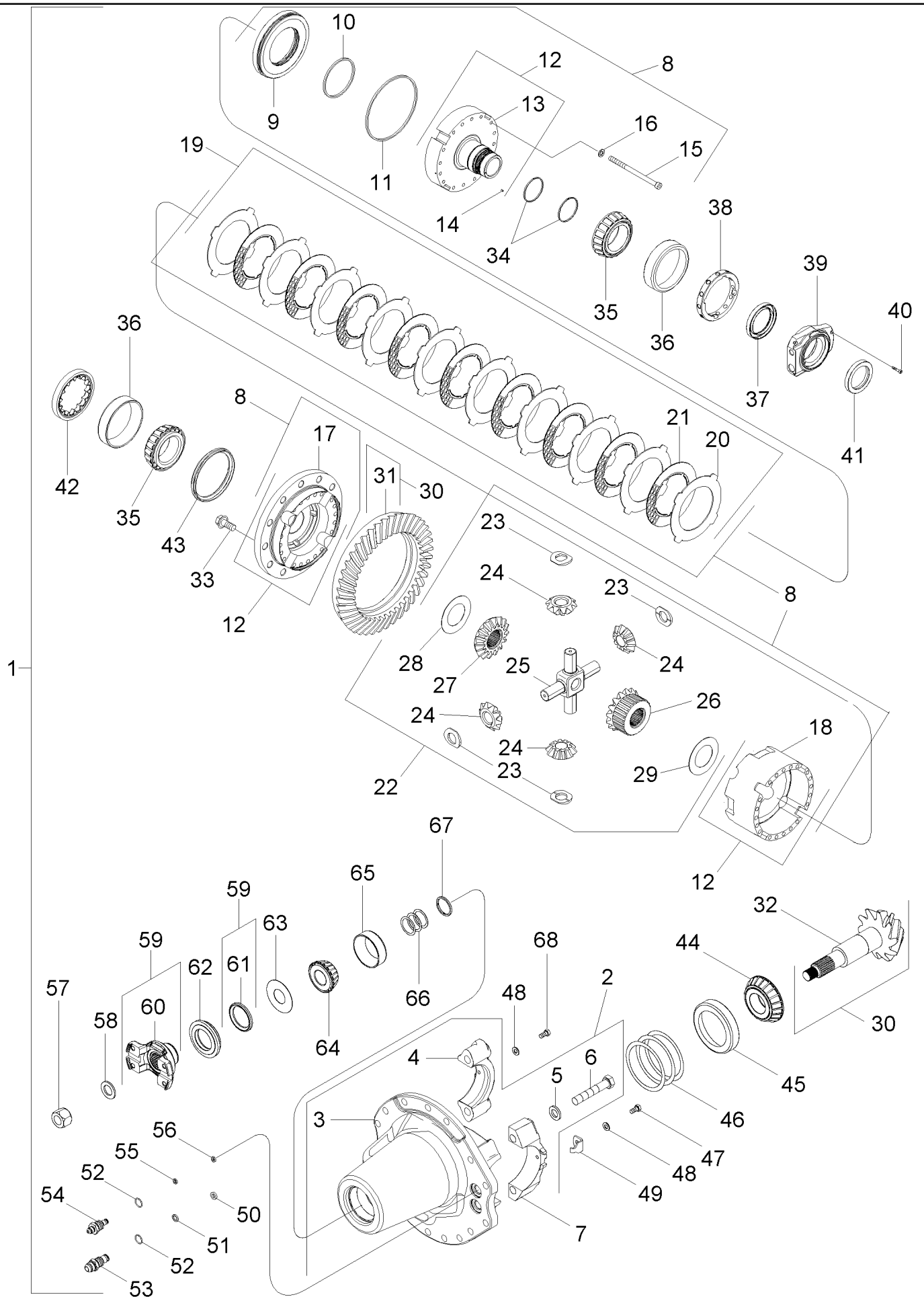

SERIAL NUMBER IS FOR THE MFD AXLE. USED FOR MFD AXLE 87454944 ASN MY00184588, 87454946 ASN MY00184591.

MX285 CASE IH MAGNUM TRACTOR (NORTH AMERICA)

05-32A CARRIER AND DIFFERENTIAL - MFD, 12 BOLT HUB, WITH DIFFERENTIAL LOCK, ASN

сылка	Номер детали	Кол-во	Описание
1	87324510	1	CARRIER ASSY., Inc. 2 - 66
2	87324513	1	CARRIER, Inc. 3 - 7
3	NSS	1	NOT SERVICED SEPARATELY, Housing
4	NSS	1	NOT SERVICED SEPARATELY, Cap
5	896-12016	4	WASHER, M17.5 x 30 x 4, HT,
6	828-16090	4	BOLT, Hex, M16 x 90, 10.9,
7	NSS	1	NOT SERVICED SEPARATELY, Cap
8	87324480	1	CASE ASSY., Inc. 9 - 29
9	87324486	1	PISTON,
10	87324482	1	SEAL,
11	87324484	1	SEAL,
12	87324492	1	CASE ASSY., Inc. 13 - 17
13	NSS	1	NOT SERVICED SEPARATELY, Cap
14	87404998	1	PLUG,
15	87324495	16	BOLT,
16	87324498	16	WASHER,
17	NSS	1	NOT SERVICED SEPARATELY, Flange
18	NSS	1	NOT SERVICED SEPARATELY, Housing
19	87324488	1	KIT, Inc. 20, 21
20	NSS	10	NOT SERVICED SEPARATELY, Plate
21	NSS	9	NOT SERVICED SEPARATELY, Disc, Friction
22	87324491	1	KIT, Inc. 23 - 29
23	NSS	4	NOT SERVICED SEPARATELY, Washer, Sperical
24	NSS	4	NOT SERVICED SEPARATELY, Gear
25	NSS	1	NOT SERVICED SEPARATELY, Shaft
26	NSS	1	NOT SERVICED SEPARATELY, Gear
28	NSS	1	NOT SERVICED SEPARATELY, Washer, Thrust
29	NSS	1	NOT SERVICED SEPARATELY, Washer, Thrust
30	87324538	1	BEVEL GEAR, Inc. 31, 32
31	NSS	1	NOT SERVICED SEPARATELY, Ring, Gear
32	NSS	1	NOT SERVICED SEPARATELY, Shaft, Pinion
33	H136416	12	SCREW,
34	87404472	1	RING, PISTON,
35	1968291C1	2	BEARING,
36	1968292C1	2	BEARING,
37	87310117	1	SEAL,
38	87405001	1	NUT, SPECIAL,
39	87404997	1	RETAINER, SEAL,
40	87404489	3	SCREW,
41	87310116	1	SEAL,
42	1277233C1	1	RING,
43	87404471	1	SEAL,
44	87324516	1	BEARING, CONE,
45	87324517	1	BEARING, CUP,
46	1277229C1	1	PACKAGE, Inc. 46

SERIAL NUMBER IS FOR THE MFD AXLE. USED FOR MFD AXLE 87454944 ASN MY00184588, 87454946 ASN MY00184591.

MX285 CASE IH MAGNUM TRACTOR (NORTH AMERICA)

05-32A CARRIER AND DIFFERENTIAL - MFD, 12 BOLT HUB, WITH DIFFERENTIAL LOCK, ASN

сылка	Номер детали	Кол-во	Описание
46	NSS	5	NOT SERVICED SEPARATELY, Shim .003
46	NSS	5	NOT SERVICED SEPARATELY, Shim .005
46	NSS	5	NOT SERVICED SEPARATELY, Shim .010
47	87404488	1	SCREW,
48	496-11034	2	WASHER, 11/32" x 11/16" x 1/16", HDN, 11/32 x 11/16 x 1/16
49	1277234C1	1	CLEVIS,
50	87404548	1	SEAL,
51	87404474	1	BACK-UP RING,
52	87405002	2	O-RING,
53	87404479	1	COUPLING,
54	87404480	1	COUPLING,
55	87404473	1	BACK-UP RING,
56	87404547	1	SEAL,
57	87324520	1	NUT,
58	87324523	1	WASHER,
59	87324528	1	YOKE, Inc. 60, 61
60	NSS	1	NOT SERVICED SEPARATELY, Yoke
61	87324547	1	DEFLECTOR,
62	87324542	1	SEAL, OIL,
63	87324540	1	SLINGER,
64	87324534	1	BEARING, CONE,
65	87324532	1	BEARING, CUP,
66	318504A1	1	KIT, SHIM, Inc. 66
66	NSS	1	NOT SERVICED SEPARATELY, Shim .010
66	NSS	1	NOT SERVICED SEPARATELY, Shim .014
66	NSS	1	NOT SERVICED SEPARATELY, Shim .015
66	NSS	1	NOT SERVICED SEPARATELY, Shim .016
66	NSS	1	NOT SERVICED SEPARATELY, Shim .018
66	NSS	1	NOT SERVICED SEPARATELY, Shim .020
66	NSS	1	NOT SERVICED SEPARATELY, Shim .021
66	NSS	1	NOT SERVICED SEPARATELY, Shim .022
66	NSS	1	NOT SERVICED SEPARATELY, Shim .023
66	NSS	1	NOT SERVICED SEPARATELY, Shim .030
67	628-8016	1	BOLT, Hex, M8 x 16, 10.9, Full Thd,

SERIAL NUMBER IS FOR THE MFD AXLE. USED FOR MFD AXLE 87454944 ASN MY00184588, 87454946 ASN MY00184591.

05-35 FRONT AXLE PLANETARIES AND HUB - MFD, 12 BOLT HUB

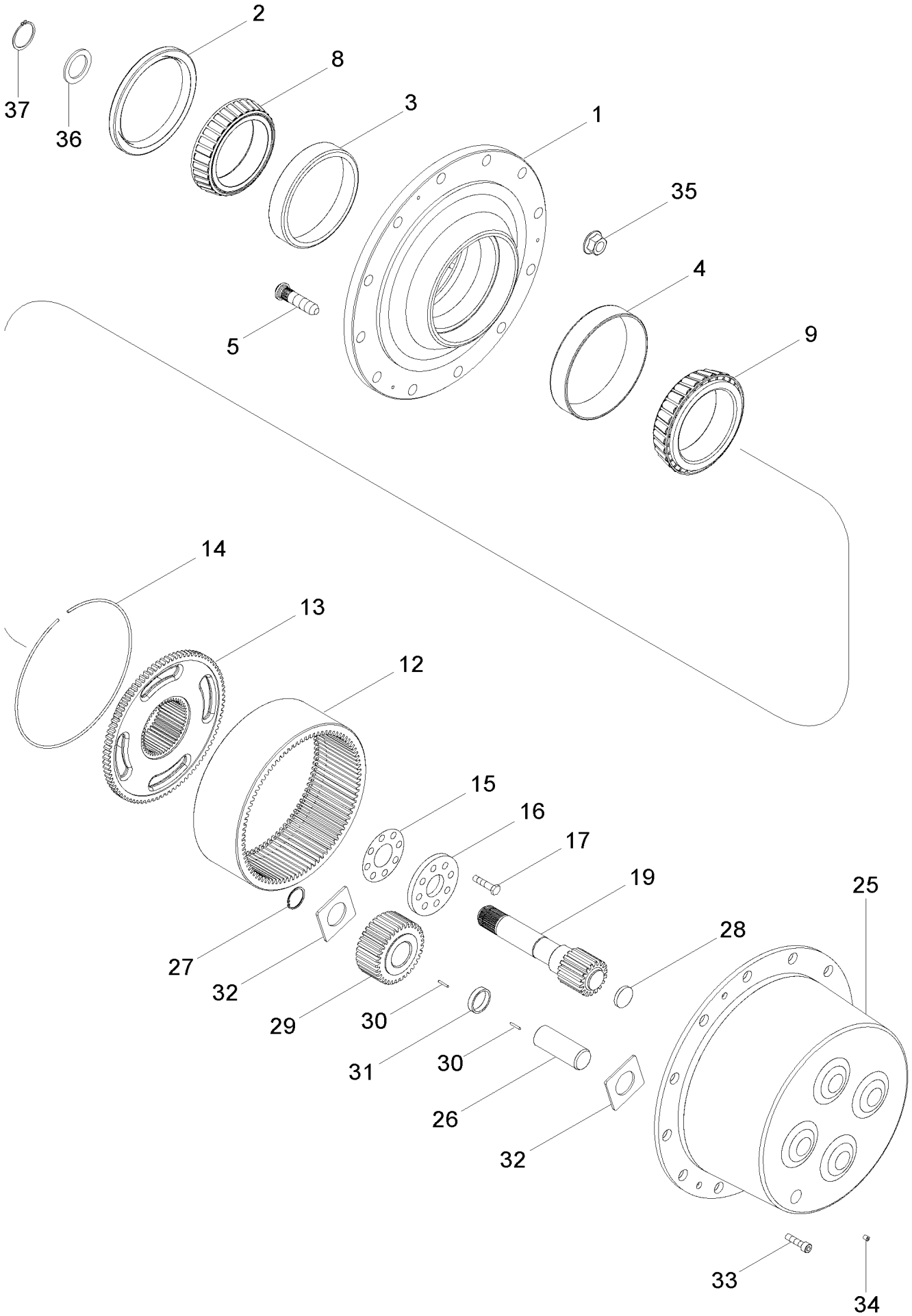

MX285 CASE IH MAGNUM TRACTOR (NORTH AMERICA)

05-35 FRONT AXLE PLANETARIES AND HUB - MFD, 12 BOLT HUB

ссылка	Номер детали	Кол-во	Описание
	NSS	2	NOT SERVICED SEPARATELY, HUB ASSY, Inc. 1 - 5, Order Components
1	295168A1	2	HUB,
2	87452966	2	KIT, Seal
3	L31698	2	BEARING, CUP, 7-3/16 OD x 1-15/16 inch wide (183 x 49 MM)
4	135649A1	2	BEARING, CUP,
5	297495A1	24	STUD,
8	311042A1	1	BEARING, CONE,
9	135648A1	1	BEARING, CONE,
	281985A1	2	GEAR, RING, Inc. 12 - 14
12	NSS	1	NOT SERVICED SEPARATELY, Ring, Gear
13	NSS	1	NOT SERVICED SEPARATELY, Hub
14	NSS	1	NOT SERVICED SEPARATELY, Ring, Retaining
	302180A1	2	KIT, SHIM, Inc. 15
15	NSS	5	NOT SERVICED SEPARATELY, Shim
15	NSS	5	NOT SERVICED SEPARATELY, Shim
15	NSS	5	NOT SERVICED SEPARATELY, Shim
15	NSS	5	NOT SERVICED SEPARATELY, Shim
15	NSS	5	NOT SERVICED SEPARATELY, Shim
15	NSS	5	NOT SERVICED SEPARATELY, Shim
16	281986A1	2	PLATE, LARGE,
17	628-12030	16	BOLT, Hex, M12 x 30, 10.9, Full Thd, M12 x 30; 10,9
19	281982A3	2	SUN GEAR,
	302174A1	2	GEAR WHEEL, Inc. 25 - 32
25	NSS	1	NOT SERVICED SEPARATELY, Flange
26	302196A1	4	PIN, LARGE,
27	100-21150	4	RING, SNAP, 1.50", Int, #150,
28	302184A1	1	BUTTON, HOLE PLUG,
	316328A1	1	KIT, FIP, Inc. 29 - 32
29	NSS	4	NOT SERVICED SEPARATELY, Gear
30	NSS	328	NOT SERVICED SEPARATELY, Bearing, Needle
31	NSS	4	NOT SERVICED SEPARATELY, Spacer
32	NSS	8	NOT SERVICED SEPARATELY, Washer, Thrust
33	864-6020	6	SCREW, Hex Soc Hd, M6 x 20, 8.8, M6 x 20; 8.8
34	221-887	2	PLUG, 3/4
35	253212A1	24	NUT,
36	87403378	1	WASHER, THRUST,
37	87403379	1	SNAP RING,

MX285 CASE IH MAGNUM TRACTOR (NORTH AMERICA)

05-37 STEERING CYLINDER ASSEMBLY - MFD, 12 BOLT HUB, BSN

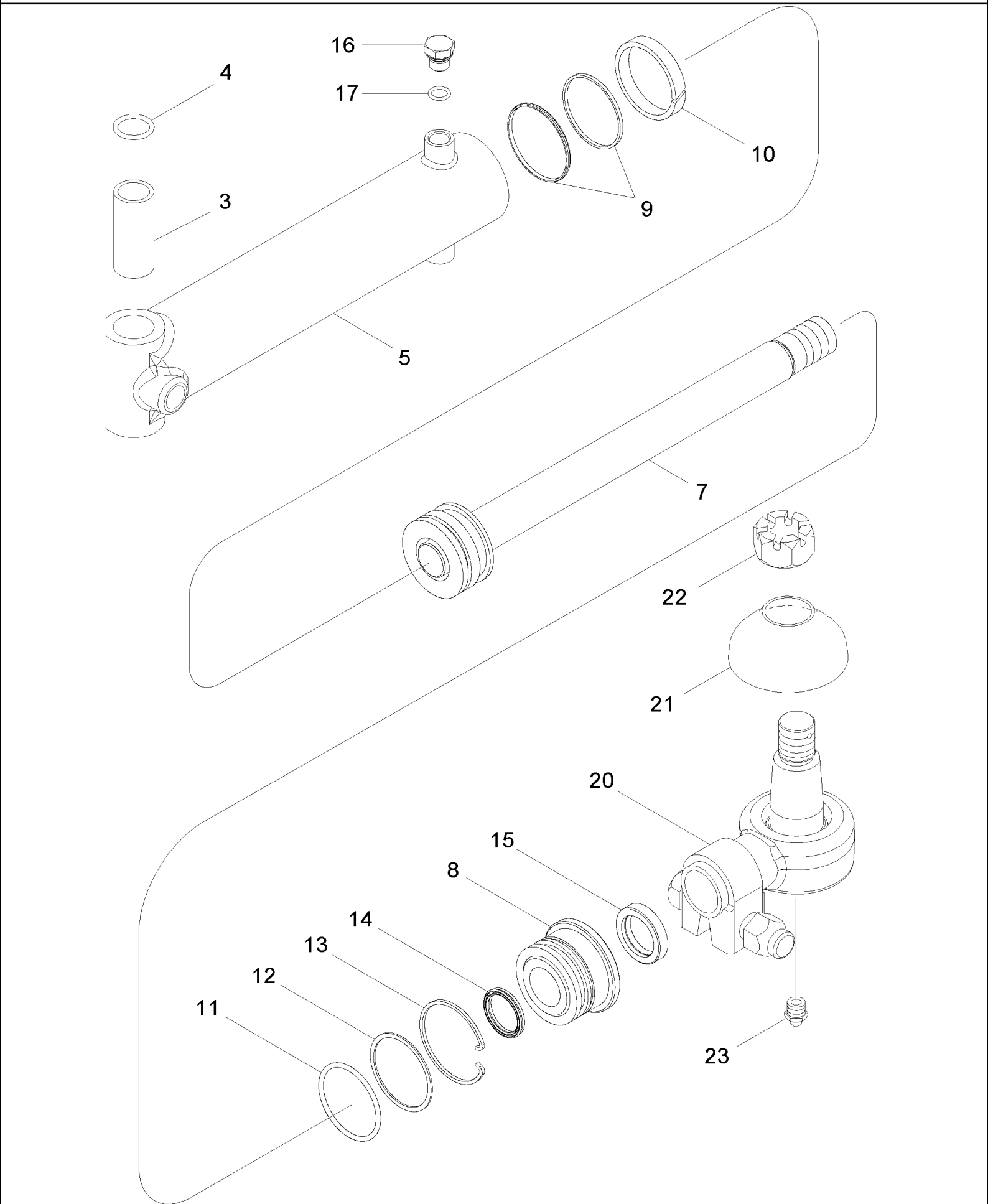

USED FOR MFD AXLE 396442A6 BSN FUSA6700003, USED FOR MFD AXLE 407300A6 BSN FUSA6400032, USED FOR MFD AXLE 407303A6 BSN FUSA6100117, USED FOR MFD AXLE 407312A6 BSN FUSA6500008.

MX285 CASE IH MAGNUM TRACTOR (NORTH AMERICA)

05-37 STEERING CYLINDER ASSEMBLY - MFD, 12 BOLT HUB, BSN

ссылка	Номер детали	Кол-во	Описание
	293678A2	2	CYLINDER STEERING, Inc. 3 - 17
3	314450A2	1	BUSHING, LARGE,
4	238-5212	2	O-RING, -212, 70 Duro, .859" ID x .139" Thk,
5	NSS	1	NOT SERVICED SEPARATELY, Tube
7	295564A1	1	ROD, PISTON,
8	327554A1	1	CAP CYLINDER END,
	318850A1	1	KIT, GASKET, Inc. 9 - 15
9	NSS	1	NOT SERVICED SEPARATELY, Seal
10	NSS	1	NOT SERVICED SEPARATELY, Ring, Wear
11	NSS	1	NOT SERVICED SEPARATELY, O-Ring
12	NSS	1	NOT SERVICED SEPARATELY, Ring, Backup
13	NSS	1	NOT SERVICED SEPARATELY, Ring, Retaining
14	NSS	1	NOT SERVICED SEPARATELY, Seal
15	NSS	1	NOT SERVICED SEPARATELY, Wiper
16	220064A1	1	PLUG, M14 x 1.5, ORB, Inc. 17
17	637-63113	1	O-RING, Cl 6, 11.3MM ID x 2.2 Thk, 11,3 ID x 2,2
20	435664A1	2	BALL JOINT, Inc. 21 - 23
21	317647A1	1	BOOT,
22	429-1314	1	NUT, SLOTTED, 7/8"-14, G8, 7/8 NF; 8
23	219-1	1	NIPPLE, LUBE, 1/8"-27 x .66 lg,

USED FOR MFD AXLE 396442A6 BSN FUSA6700003, USED FOR MFD AXLE 407300A6 BSN FUSA6400032, USED FOR MFD AXLE 407303A6 BSN FUSA6100117, USED FOR MFD AXLE 407312A6 BSN FUSA6500008.

05-37A STEERING CYLINDER ASSEMBLY - MFD, 12 BOLT HUB, ASN

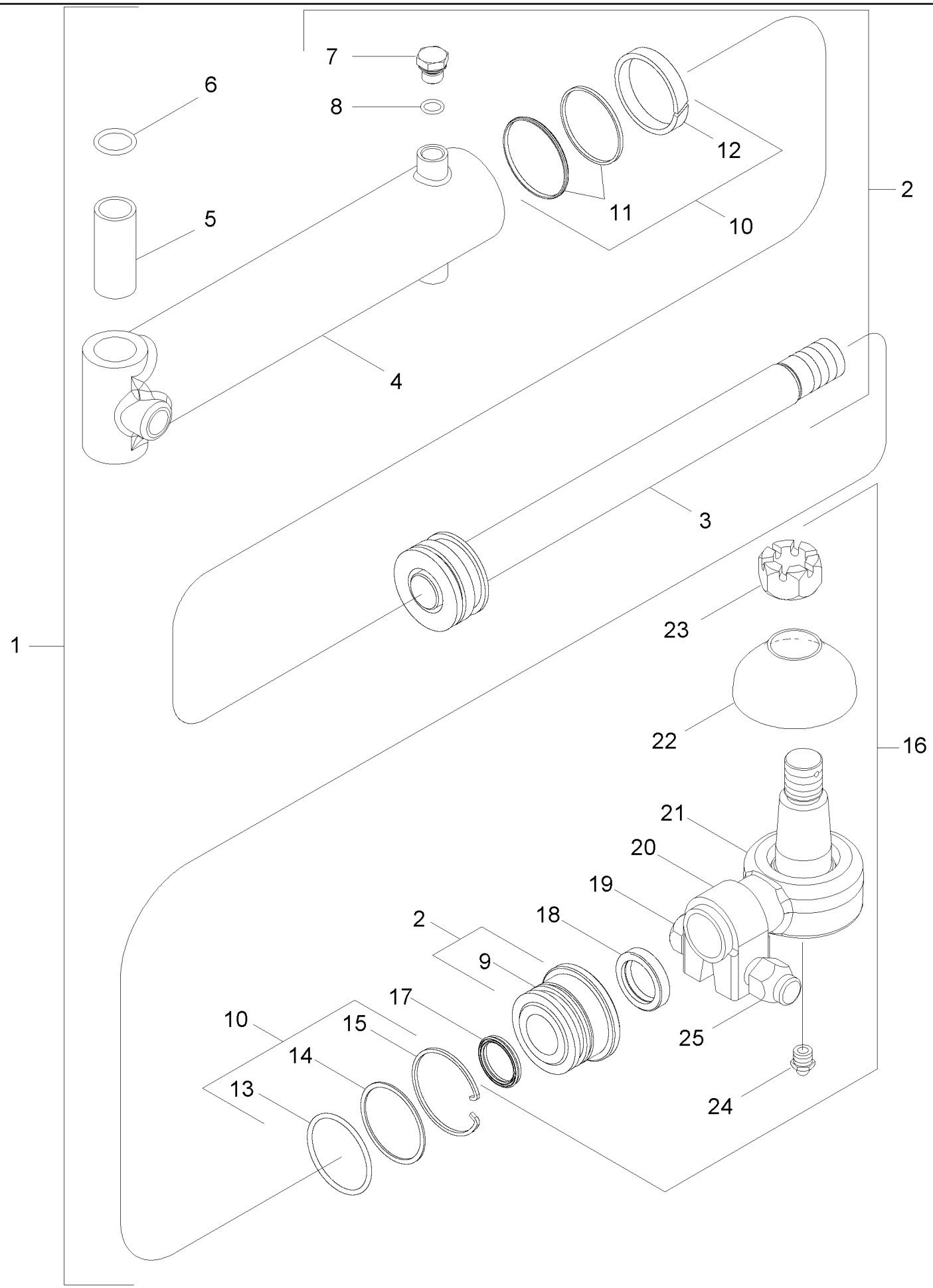

USED FOR MFD AXLE 396442A6 ASN FUSA6700003, USED FOR MFD AXLE 407300A6 ASN FUSA6400032, USED FOR MFD AXLE 407303A6 ASN FUSA6100117, USED FOR MFD AXLE 407312A6 ASN FUSA6500008. USED FOR ALL 12 BOLT MFD AXLES WITH SERIAL NUMBERS STARTING WITH GUSA, MUSA and MY00.

MX285 CASE IH MAGNUM TRACTOR (NORTH AMERICA)

05-37A STEERING CYLINDER ASSEMBLY - MFD, 12 BOLT HUB, ASN

ссылка	Номер детали	Кол-во	Описание
1	87455647	1	CYLINDER ASSY., Left Hand, Inc. 2 - 25
1	87455648	1	CYLINDER ASSY., Right Hand, Inc. 2 - 25
2	87455649	1	CYLINDER STEERING, Kit, Left Hand, Inc. 3 - 8
2	87455650	1	CYLINDER STEERING, Kit, Right Hand, Inc. 3 - 8
3	87455653	1	ROD, PISTON,
4	NSS	1	NOT SERVICED SEPARATELY, Tube
5	314450A2	1	BUSHING, LARGE,
6	238-5212	2	O-RING, -212, 70 Duro, .859" ID x .139" Thk,
7	220064A1	1	PLUG, M14 x 1.5, ORB, Inc. 8
8	637-63113	1	O-RING, Cl 6, 11.3MM ID x 2.2 Thk,
9	87455634	1	CAP CYLINDER END,
10	87455632	1	KIT, SEALS, Inc. 11 - 15
11	NSS	1	NOT SERVICED SEPARATELY, Seal
12	NSS	1	NOT SERVICED SEPARATELY, Ring, Wear
13	NSS	1	NOT SERVICED SEPARATELY, O-Ring
14	NSS	1	NOT SERVICED SEPARATELY, Ring, Backup
15	NSS	1	NOT SERVICED SEPARATELY, Ring, Retaining
16	87455628	1	BALL JOINT, Inc. 17 - 25
17	87455652	1	SEALRING, Small
18	87455667	1	SEALRING, Large
19	87455665	1	BOLT,
20	87455773	1	CLAMP,
21	NSS	1	NOT SERVICED SEPARATELY, Ball Joint
22	87455664	1	BOOT,
23	87455662	1	NUT, SPECIAL,
24	87455654	1	FITTING,
25	87455666	1	NUT, SPECIAL,

USED FOR MFD AXLE 396442A6 ASN FUSA6700003, USED FOR MFD AXLE 407300A6 ASN FUSA6400032, USED FOR MFD AXLE 407303A6 ASN FUSA6100117, USED FOR MFD AXLE 407312A6 ASN FUSA6500008. USED FOR ALL 12 BOLT MFD AXLES WITH SERIAL NUMBERS STARTING WITH GUSA, MUSA and MY00.

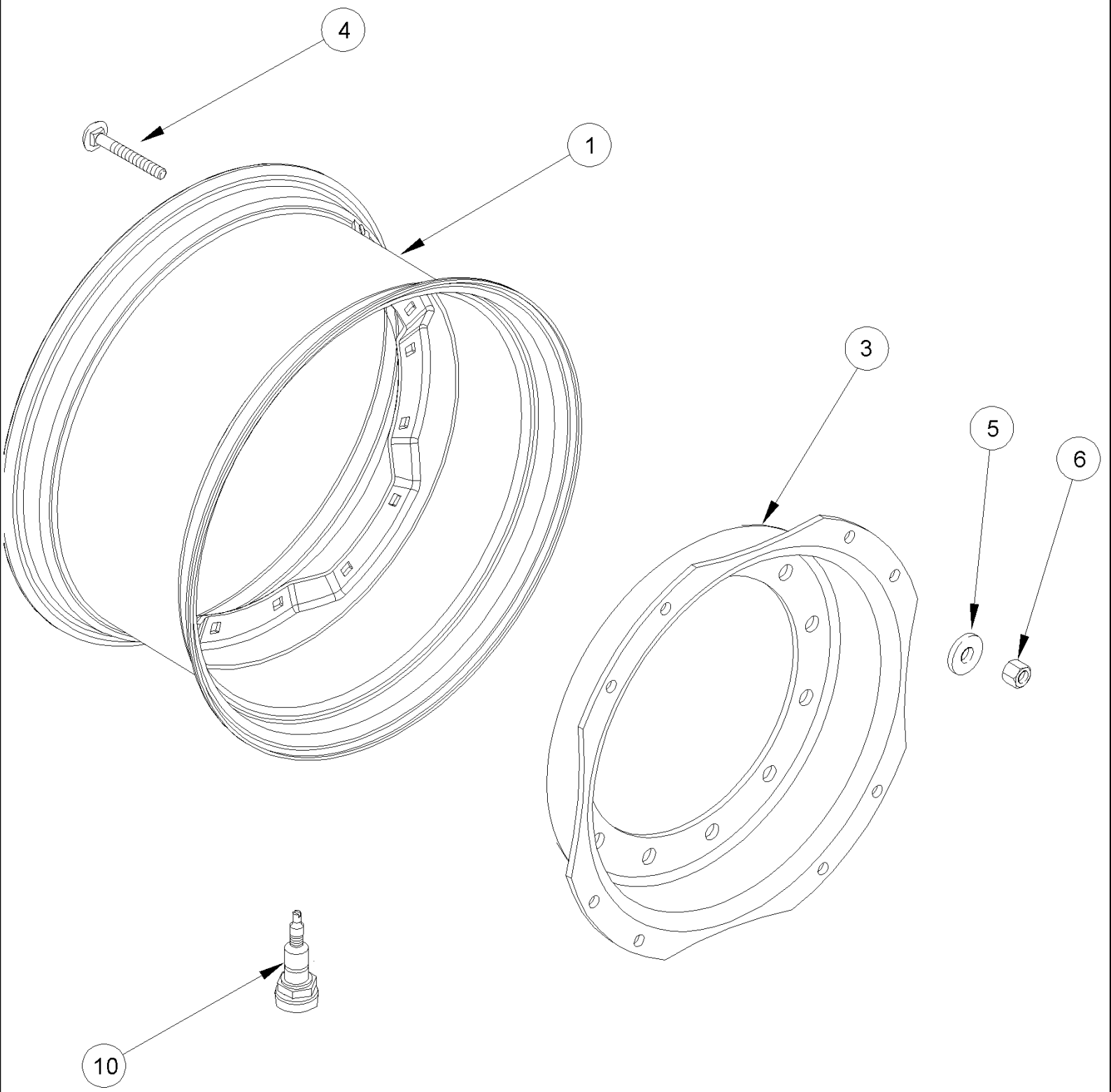
4
1
3
5
6
10

MX285 CASE IH MAGNUM TRACTOR (NORTH AMERICA)

05-40 FRONT WHEELS - MFD, 12 BOLT HUB

ссылка	Номер детали	Кол-во	Описание
	188347A2	2	WHEEL ASSY, W18Lx28, Inc. 1 - 6, For Tires 600/65R28
1	188350A2	1	RIM,
3	188328A1	1	DISC, WHEEL, 12 Bolt
4	240686A1	8	BOLT, SPECIAL,
5	896-11016	8	WASHER, M17.5 x 30 x 4, HT, 17,5 x 30 x 4 mm
6	829-1416	8	NUT, M16, Cl 10, M16; 10
	188335A1	2	WHEEL ASSY., W13x30, Inc. 1 - 6, For Tires 380/85R30, 14.9R30
1	188338A1	1	RIM,
3	188328A1	1	DISC, WHEEL, 12 Bolt
4	240686A1	8	BOLT, SPECIAL,
5	896-11016	8	WASHER, M17.5 x 30 x 4, HT, 17,5 x 30 x 4 mm
6	829-1416	8	NUT, M16, Cl 10, M16; 10
	188339A1	2	WHEEL ASSY., W15x30 Inc. 1 - 6, For Tires 480/85R30, 480/70R30, 420/90R30, 16.9R30,
1	188341A1	1	RIM,
3	188328A1	1	DISC, WHEEL, 12 Bolt
4	240686A1	8	BOLT, SPECIAL,
5	896-11016	8	WASHER, M17.5 x 30 x 4, HT, 17,5 x 30 x 4 mm
6	829-1416	8	NUT, M16, Cl 10, M16; 10
	87401233	2	WHEEL, W20x30, For Tires 660/70R30
1	87402304	1	RIM,
3	188328A1	1	DISC, WHEEL, 12 Bolt
4	240686A1	8	BOLT, SPECIAL,
5	896-11016	8	WASHER, M17.5 x 30 x 4, HT, 17,5 x 30 x 4 mm
6	829-1416	8	NUT, M16, Cl 10, M16, 10
	228305A1	2	WHEEL, W10x34, For Tires 320/85R34
1	258255A1	1	RIM,
3	231999A1	1	FLANGE, 12 Bolt
4	240686A1	8	BOLT, SPECIAL,
5	896-11016	8	WASHER, M17.5 x 30 x 4, HT, 17,5 x 30 x 4 mm
6	829-1416	8	NUT, M16, Cl 10, M16, 10
	231997A1	2	WHEEL ASSY., W13x34, Inc. 1 - 6, For Tires 380/85R34
1	231998A1	1	RIM,
3	231999A1	1	FLANGE, 12 Bolt
4	240686A1	8	BOLT, SPECIAL,
5	896-11016	8	WASHER, M17.5 x 30 x 4, HT, 17,5 x 30 x 4 mm
6	829-1416	8	NUT, M16, Cl 10, M16; 10
	259371A1	2	WHEEL ASSY., W15lx34, Inc. 1 - 6, For Tires 480/70R34, 540/65R34
1	259416A1	1	RIM,
3	231999A1	1	FLANGE, 12 Bolt
4	240686A1	8	BOLT, SPECIAL,
5	896-11016	8	WASHER, M17.5 x 30 x 4, HT, 17,5 x 30 x 4 mm
6	829-1416	8	NUT, M16, Cl 10, M16; 10
	297465A1	2	WHEEL, W10x38, Inc. 1 - 6, For Tires 320/85R38
1	297355A1	1	RIM,
3	297466A1	1	DISC, 12 Bolt

MX285 CASE IH MAGNUM TRACTOR (NORTH AMERICA)

05-40 FRONT WHEELS - MFD, 12 BOLT HUB

ссылка	Номер детали	Кол-во	Описание
4	240686A1	12	BOLT, SPECIAL,
5	896-11016	12	WASHER, M17.5 x 30 x 4, HT, 17,5 x 30 x 4 mm
6	829-1416	12	NUT, M16, Cl 10, M16; 10
	347617A1	2	WHEEL, W12x38, Inc. 1 - 6, For Tires 380/80R38
1	347618A1	1	RIM,
3	297466A1	1	DISC, 12 Bolt
4	240686A1	12	BOLT, SPECIAL,
5	896-11016	12	WASHER, M17.5 x 30 x 4, HT, 17,5 x 30 x 4 mm
6	829-1416	12	NUT, M16, Cl 10, M16; 10
	396519A1	2	WHEEL, W10x42, For Tires 320/80R42
1	396520A1	1	RIM,
3	297466A1	1	DISC, 12 Bolt
4	240686A1	12	BOLT, SPECIAL,
5	896-11016	12	WASHER, M17.5 x 30 x 4, HT, 17,5 x 30 x 4 mm
6	829-1416	12	NUT, M16, Cl 10, M16, 10
10	A20058	2	VALVE STEM,

05-41 SPACER - DUAL FRONT WHEELS

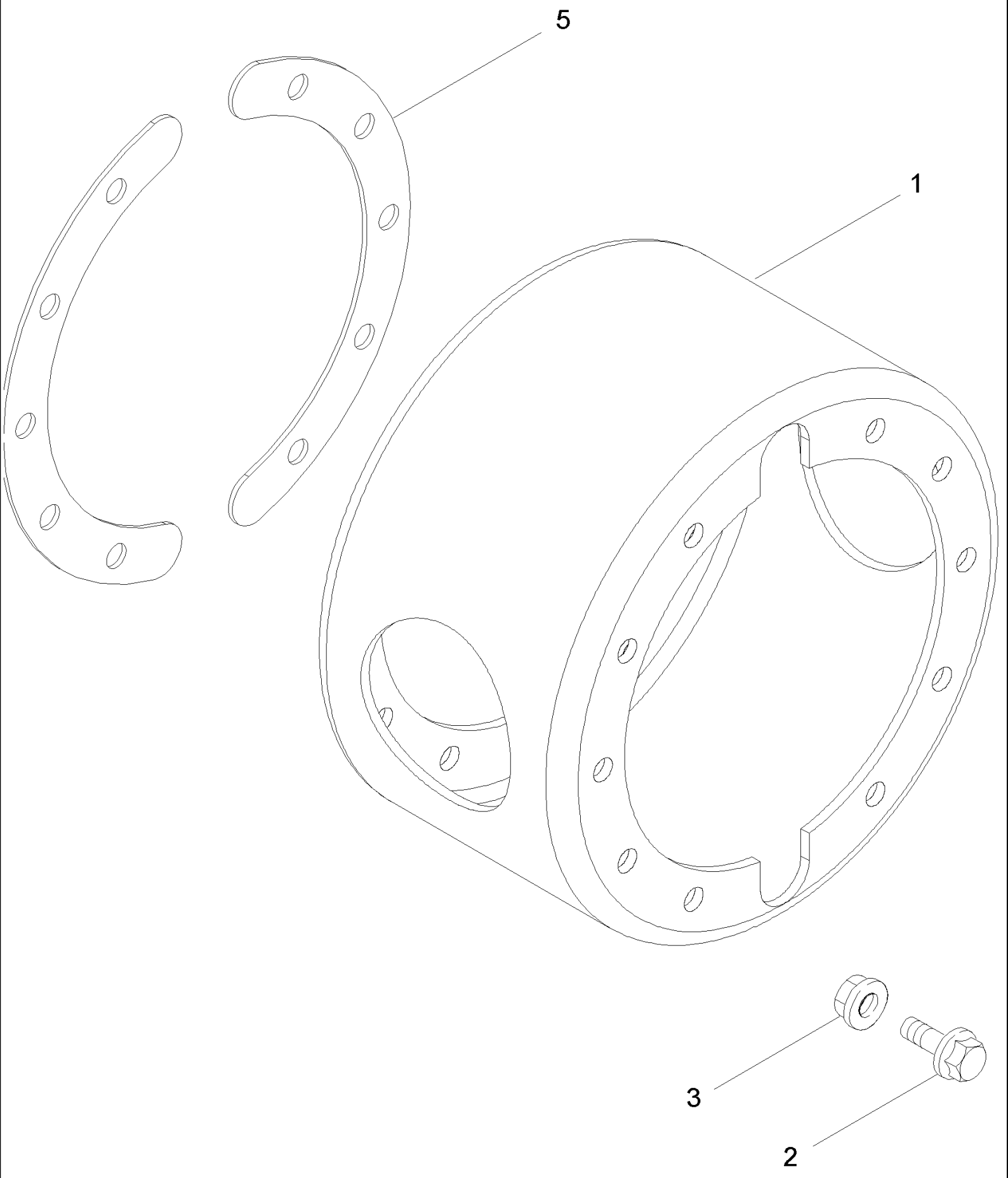

MX285 CASE IH MAGNUM TRACTOR (NORTH AMERICA)

05-41 SPACER - DUAL FRONT WHEELS

ссылка	Номер детали	Кол-во	Описание
1	282189A1	2	SPACER, 12 Inch
2	283120A1	20	BOLT, M20 x 45
3	253212A1	20	NUT,
1	282188A1	2	SPACER, 16 Inch
2	283120A1	20	BOLT, M20 x 45
3	253212A1	20	NUT,
5	365372A1	4	SHIM, Used With 34 Inch Wheel Only

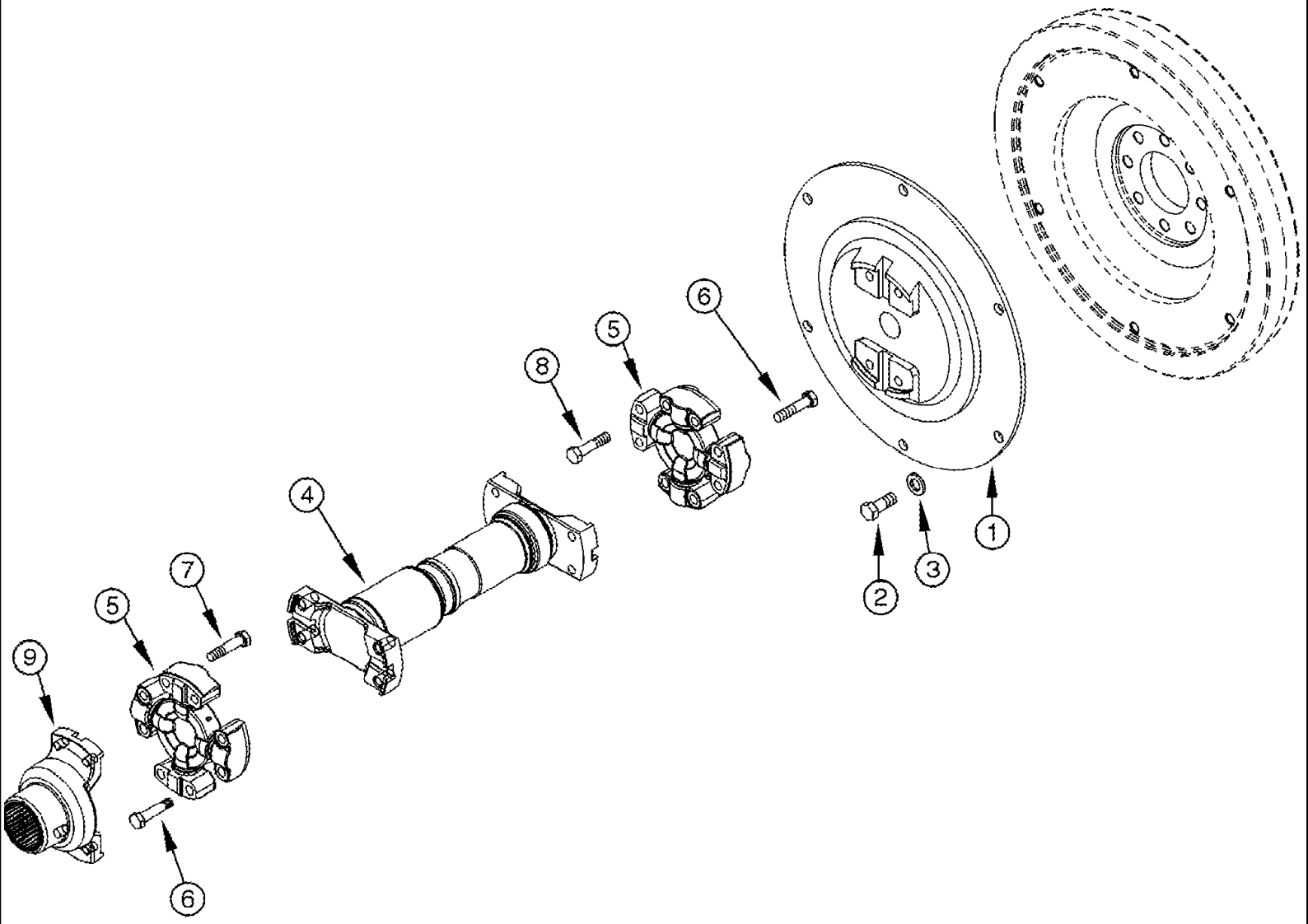
1
2
3
4
5
6
7
8
9

MX285 CASE IH MAGNUM TRACTOR (NORTH AMERICA)

06-01 TRANSMISSION DRIVE SHAFT

ссылка	Номер детали	Кол-во	Описание
1	248408A2	1	PLATE, DRIVE, , MX210, MX230
1	248409A2		PLATE, DRIVE, , MX255, MX285
2	628-12030	6	BOLT, Hex, M12 x 30, 10.9, Full Thd, M12 x 30; 10,9
3	896-12012	6	WASHER, M12 x 24.5 x 3, HT, 13,5 x 24 x 3 mm
4	259075A3	1	SHAFT, DRIVE, Inc. 5, 6, MX210, MX230
4	301842A2	1	SHAFT, DRIVE, Inc. 5, 6, MX255, MX285
5	259076A2	2	SPIDER, U-JOINT, , MX210, MX230
5	301844A2	2	SPIDER, U-JOINT, , MX255, MX285
6	828-10045	8	BOLT, Hex, M10 x 45, 10.9, M10 x 45; 10.9, MX210, MX230
6	828-12050	8	BOLT, Hex, M12 x 50, 10.9, M12 x 50; 10.9, MX255, MX285
7	828-10045	4	BOLT, Hex, M10 x 45, 10.9, M10 x 45; 10.9, MX210, MX230
7	828-12050	4	BOLT, Hex, M12 x 50, 10.9, M12 x 50; 10.9, MX255, MX285
8	828-10045	4	BOLT, Hex, M10 x 45, 10.9, M10 x 45; 10.9, MX210, MX230
8	828-12050	4	BOLT, Hex, M12 x 50, 10.9, M12 x 50; 10.9, MX255, MX285
9	259188A1	1	YOKE, Input, MX210, MX230
9	301843A1	1	YOKE, Input, MX255, MX285

MX285 CASE IH MAGNUM TRACTOR (NORTH AMERICA)

06-02 TRANSMISSION DROP BOX

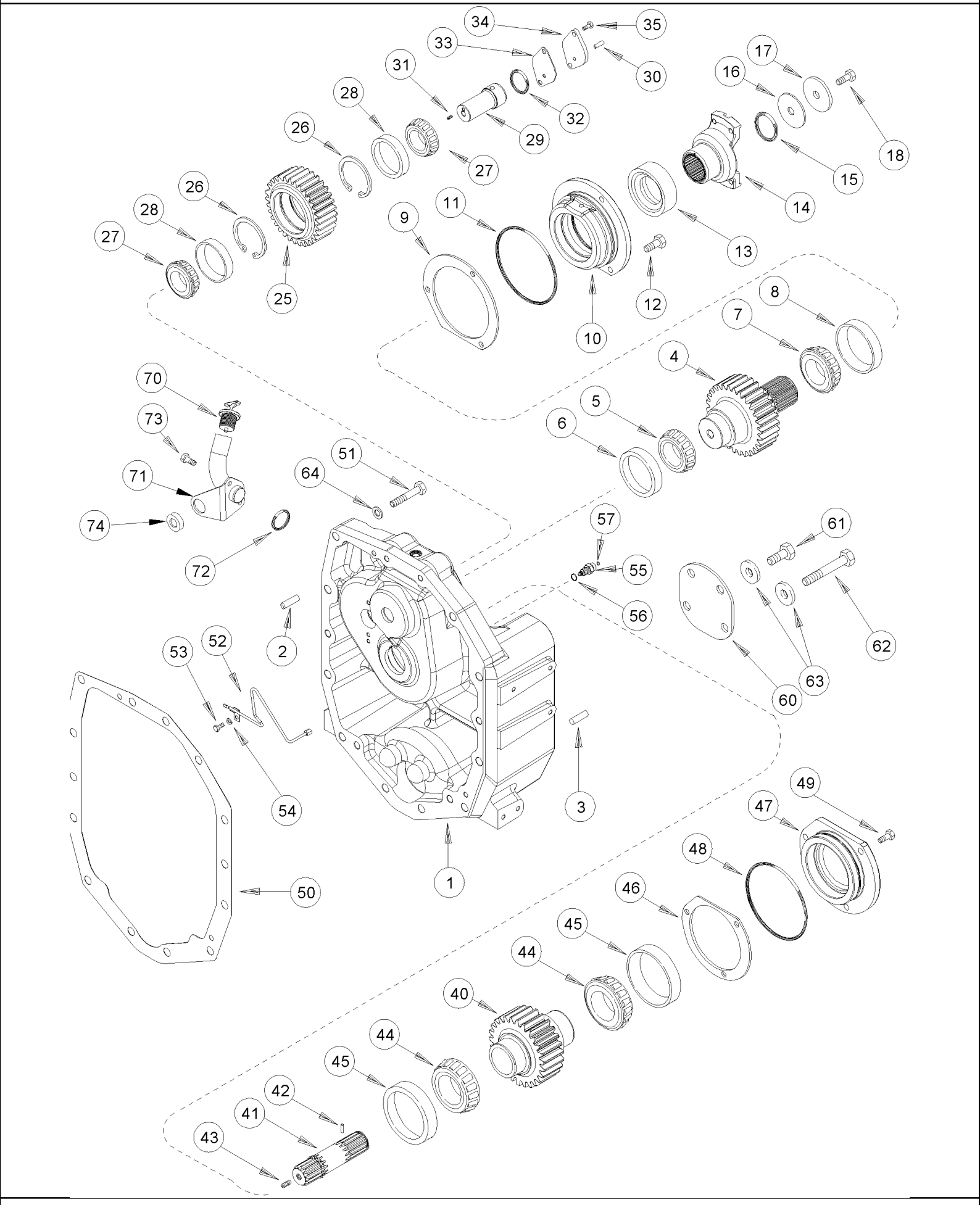

MX285 CASE IH MAGNUM TRACTOR (NORTH AMERICA)

06-02 TRANSMISSION DROP BOX

ссылка	Номер детали	Кол-во	Описание
1	225171A6	1	HOUSING, Inc. 2, 3
2	375362R1	2	PIN, 1/2 x 1-3/8
3	837-20040	2	DOWEL, M20 x 40, 20 x 40 mm
4	302553A1	1	SHAFT, GEAR, 33T
5	105503H	1	BEARING, CONE,
6	105496H	1	BEARING SET,
7	659458R1	1	BEARING, CONE,
8	105497H	1	BEARING, CUP,
	275216A2	1	KIT, SHIM, Inc. 9
9	341206A1	2	SHIM, 0,152 mm
9	341205A1	2	SHIM, 0,178 mm
9	275214A1	2	SHIM, 0,203 mm
9	228267A1	2	SHIM, 0,356 mm
9	228270A1	2	SHIM, 0,635 mm
10	221240A4	1	CAGE,
11	238-5161	1	O-RING, -161, 70 Duro, 5.487" ID x .103" Thk, 5-7/16 ID x 3/32
12	339770A1	3	SCREW,
13	225820A1	1	SEAL, OIL,
14	259188A1	1	YOKE, , MX210, MX230
14	301843A1	1	YOKE, , MX255, MX285
15	238-5225	1	O-RING, -225, 70 Duro, 1.859" ID x .139" Thk,
	276639A1	1	KIT, SHIM, Inc. 16
16	276638A1	2	SHIM, 0,203 mm
16	230486A1	2	SHIM, 0,356 mm
16	230487A1	2	SHIM, 0,508 mm
16	230488A1	2	SHIM, 0,559 mm
16	230490A1	2	SHIM, 0,635 mm
17	230497A1	1	WASHER,
18	628-16035	1	BOLT, Hex, M16 x 35, 10.9, Full Thd, Hex, M16 x 35, 10.9, Full Thd
25	302554A1	1	SHAFT, GEAR, 35T
26	101-21325	2	RING, SNAP, #325, 3.488", Int, No. 325
27	364463C91	2	BEARING, CONE,
28	364462C1	2	BEARING, CUP,
29	228304A2	1	SHAFT ASSY., Inc. 30,31
30	837-8020	1	DOWEL, M8 x 20, 8 x 20 mm
31	1342851C1	1	PLUG, 10 mm
32	238-5140	1	O-RING, -140, 90 Duro, 2.237" ID x .103" Thk,
	275217A2	1	KIT, SHIM, Inc. 33
33	341208A1	2	SHIM, 0,152 mm
33	341207A1	2	SHIM, 0,178 mm
33	275215A1	2	SHIM, 0,203 mm
33	228300A1	2	SHIM, 0,356 mm
33	228303A1	2	SHIM, 0,635 mm
34	258469A1	1	PLATE, COVER,
35	339770A1	2	SCREW,

MX285 CASE IH MAGNUM TRACTOR (NORTH AMERICA)

06-02 TRANSMISSION DROP BOX

ссылка	Номер детали	Кол-во	Описание
40	302555A1	1	SHAFT, GEAR, 30 T
41	282726A1	1	SHAFT, Inc. 42,43, Without Creep Speed
41	282724A1	1	SHAFT, Inc. 42,43, With Creep Speed
42	38-3605	1	PIN, 3/32" x 5/16", Coiled, 3/32" x 5/16", Coiled
43	284151A1	1	SCREW, M10 x 10
44	105503H	2	BEARING, CONE,
45	105496H	2	BEARING SET,
	275219A2	1	KIT, SHIM, Inc. 46
46	341210A1	2	SHIM, 0,152 mm
46	341209A1	2	SHIM, 0,178 mm
46	275213A1	2	SHIM, 0,203 mm
46	228261A1	2	SHIM, 0,356 mm
46	228265A1	2	SHIM, 0,635 mm
47	226188A3	1	CAGE,
48	238-5157	1	O-RING, -157, 70 Duro, 4.487" ID x .103" Thk,
49	339770A1	3	SCREW,
50	230760A2	1	GASKET,
51	828-20110	2	BOLT, Hex, M20 x 110, 10.9, M20 x 110; 10.9
52	259979A2	1	TUBE,
53	614-10020	1	BOLT, Hex, M10 x 20, 8.8, Full Thd,
54	892-11010	1	WASHER, LOCK, M10, M10
55	93105C1	1	UNION,
56	237-6008	1	O-RING, 8-1, 90 Duro, .644" ID x .087" Thk,
57	238-6014	1	O-RING, -014, 90 Duro, .489" ID x .070" Thk,
60	223420A1	1	COVER, , Without Mechanical Front Drive
61	628-20060	2	BOLT, Hex, M20 x 60, 10.9, Full Thd, M20 x 60; 10,9
62	828-20150	2	BOLT, Hex, M20 x 150, 10.9, M20 x 150; 10.9
63	896-12020	4	WASHER, M20 x 37.5 x 4, HT, 22 x 37 x 4 mm
64	896-12020	2	WASHER, M20 x 37.5 x 4, HT, 22 x 37 x 4 mm
70	279640A1	1	CAP,
71	295087A1	1	TUBE,
72	238-5222	1	O-RING, -222, 70 Duro, 1.484" ID x .139" Thk,
73	614-10020	2	BOLT, Hex, M10 x 20, 8.8, Full Thd,
74	248-2181	1	GROMMET, 1" ID x 3/8" Groove Dia, 1 ID

MX285 CASE IH MAGNUM TRACTOR (NORTH AMERICA)

06-03 SPEED TRANSMISSION - HOUSING, BSN AJB0355338

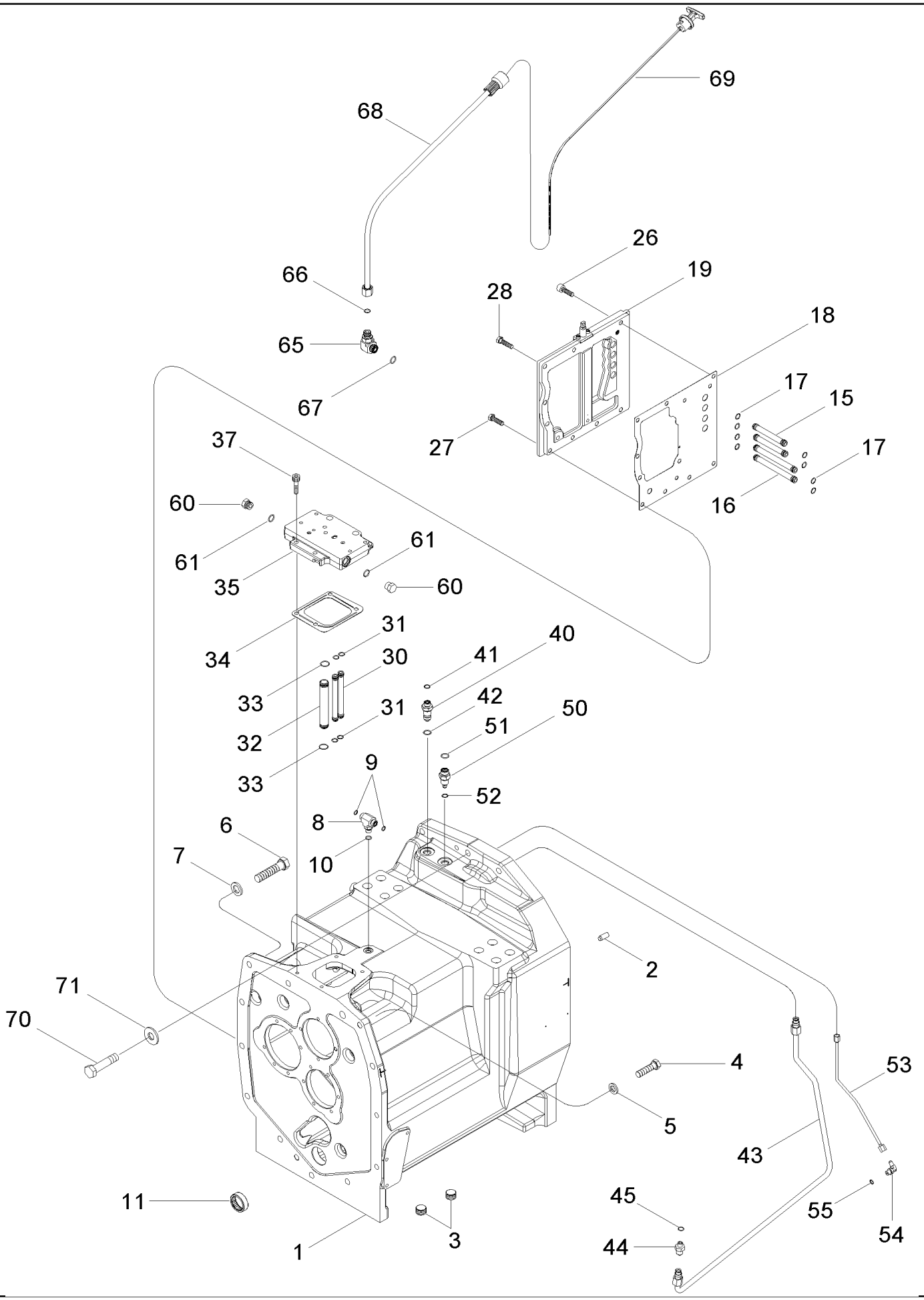

MX285 CASE IH MAGNUM TRACTOR (NORTH AMERICA)

06-03 SPEED TRANSMISSION - HOUSING, BSN AJB0355338

ссылка	Номер детали	Кол-во	Описание
1	307087A2	1	HOUSING, Inc. 2, 3, BSN AJB0304805
1	307087A3	1	HOUSING, Inc. 2, 3, ASN AJB0304805
1	87435948	1	HOUSING, Inc. 2, 3, Replaces 307087A3. Also Order 2 of 828-16090
2	837-12030	2	DOWEL, M12 x 30, 12 x 30 mm
3	192792A1	2	PLUG, 3/4 in
4	813-16060	8	BOLT, Hex, M16 x 60, 8.8, Full Thd, Hex, M16 x 60, 8.8, Full Thd
4	828-16080	1	BOLT, Hex, M16 x 80, 10.9, Hex, M16 x 80, 10.9
4	828-16090	2	BOLT, Hex, M16 x 90, 10.9, M16 x 90; 10.9, Used with 87435948 Housing
5	896-11016	9	WASHER, M17.5 x 30 x 4, HT, 17,5 x 30 x 4 mm
6	828-20090	1	BOLT, Hex, M20 x 90, 10.9, M20 x 90; 10.9
7	896-12020	1	WASHER, M20 x 37.5 x 4, HT, 22 x 37 x 4 mm
8	201-401	1	TEE, 11/16"-16 x 9/16"-18 Br, ORFS, 11/16 fc sl x 9/16 Or, Inc. 9, 10
9	238-6012	2	O-RING, -012, 90 Duro, .364" ID x .070" Thk,
10	237-6006	1	O-RING, 6-1, 90 Duro, .468" ID x .078" Thk,
11	205369R91	1	BEARING, NEEDLE,
15	235976A2	2	TUBE,
16	235977A2	2	TUBE,
17	238-5014	8	O-RING, -014, 70 Duro, .489" ID x .070" Thk,
18	234157A5	1	GASKET, , BSN AJB0304805
18	87433655	1	GASKET, , ASN AJB0304805
19	445535A2	1	PLATE ASSY., , See Figure 06-06, BSN AJB0304805
19	87433653	1	PLATE ASSY., , See Figure 06-06, ASN AJB0304805
26	861-10030	1	SCREW, Hex Soc Hd, M10 x 30, 12.9, M10 x 30; 12.9, BSN AJB0304805
26	861-10030	2	SCREW, Hex Soc Hd, M10 x 30, 12.9, M10 x 30; 12.9, ASN AJB0304805
27	628-10035	6	BOLT, Hex, M10 x 35, 10.9, Full Thd, M10 x 35; 10.9
28	614-10040	2	BOLT, Hex, M10 x 40, 8.8, Full Thd, M10 x 40; 8.8
30	235977A2	2	TUBE,
31	238-5014	4	O-RING, -014, 70 Duro, .489" ID x .070" Thk,
32	300827A1	1	TUBE,
33	238-5019	2	O-RING, -019, 70 Duro, .801" ID x .070" Thk,
34	253805A1	1	GASKET,
35	445533A2	1	PLATE ASSY., , See Figure 06-07
37	861-10035	4	SCREW, Hex Soc Hd, M10 x 35, 12.9, M10 x 35; 12.9
40	93103C1	1	UNION, , With Creep Speed
41	238-6012	1	O-RING, -012, 90 Duro, .364" ID x .070" Thk,
42	237-6008	1	O-RING, 8-1, 90 Duro, .644" ID x .087" Thk,
43	256955A2	1	TUBE, , With Creep Speed
44	218-5351	1	CONNECTOR, HYD., 3/4"-16, 37є x 9/16"-18, O-Ring, 3/4 fl x 9/16 Or, Inc. 45, With Creep Speed
45	237-6006	1	O-RING, 6-1, 90 Duro, .468" ID x .078" Thk,
50	93105C1	1	UNION, , With Creep Speed
51	238-6014	1	O-RING, -014, 90 Duro, .489" ID x .070" Thk,
52	237-6008	1	O-RING, 8-1, 90 Duro, .644" ID x .087" Thk,
53	311670A1	1	TUBE, , With Creep Speed
54	218-5103	1	ELBOW, 90є, 7/16"-20, 37є x 7/16"-20, O-Ring, 7/16 fl x adj Or, Inc. 55, With Creep Speed
55	237-6004	1	O-RING, 4-1, 90 Duro, .351" ID x .072" Thk,

MX285 CASE IH MAGNUM TRACTOR (NORTH AMERICA)

06-03 SPEED TRANSMISSION - HOUSING, BSN AJB0355338

ссылка	Номер детали	Кол-во	Описание
60	214389	2	PLUG, Hex Hd, 3/4"-16 ORB, 3/4 Or, Inc. 61, Without Creep Speed
61	237-6008	2	O-RING, 8-1, 90 Duro, .644" ID x .087" Thk,
65	700-305	1	ELBOW, 90є, 13/16"-18 ORFS x M18 x 1.5 ORB, 13/16 fc sl x 18 Or, Inc. 66, 67
66	238-6014	1	O-RING, -014, 90 Duro, .489" ID x .070" Thk,
67	637-63153	1	O-RING, Cl 6, 15.3MM ID x 2.2 Thk, 15,3 ID x 2,2
68	295149A1	1	TUBE,
69	295316A1	1	DIPSTICK,
70	814-16080	2	BOLT, Hex, M16 x 80, 8.8,
71	896-12016	2	WASHER, M17.5 x 30 x 4, HT, 17,5 x 30 x 4 mm

MX285 CASE IH MAGNUM TRACTOR (NORTH AMERICA)

06-04 SPEED TRANSMISSION - HOUSING, BTW AJB0355338 & AJB0355923

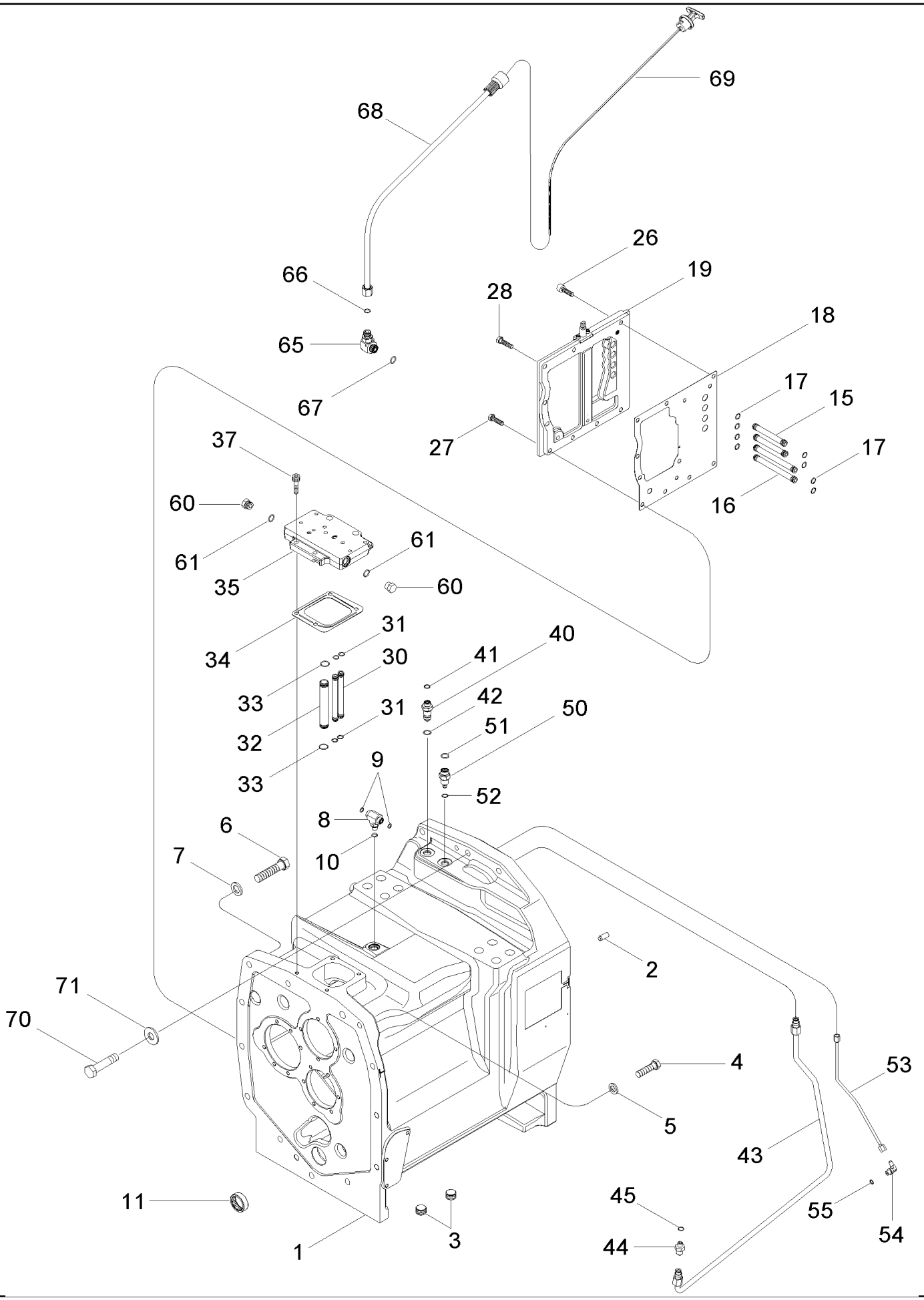

MX285 CASE IH MAGNUM TRACTOR (NORTH AMERICA)

06-04 SPEED TRANSMISSION - HOUSING, BTW AJB0355338 & AJB0355923

ссылка	Номер детали	Кол-во	Описание
1	87435948	1	HOUSING, Inc. 2, 3
2	837-12030	2	DOWEL, M12 x 30, 12 x 30 mm
3	192792A1	2	PLUG, 3/4 in
4	828-16060	7	BOLT, Hex, M16 x 60, 10.9, Full Thd, Hex, M16 x 60, 10.9, Full Thd
4	828-16090	2	BOLT, Hex, M16 x 90, 10.9, M16 x 90; 10.9
5	896-11016	9	WASHER, M17.5 x 30 x 4, HT, 17,5 x 30 x 4 mm
6	828-20090	1	BOLT, Hex, M20 x 90, 10.9, M20 x 90; 10.9
7	896-12020	1	WASHER, M20 x 37.5 x 4, HT, 22 x 37 x 4 mm
8	201-401	1	TEE, 11/16"-16 x 9/16"-18 Br, ORFS, 11/16 fc sl x 9/16 Or, Inc. 9, 10
9	238-6012	2	O-RING, -012, 90 Duro, .364" ID x .070" Thk,
10	237-6006	1	O-RING, 6-1, 90 Duro, .468" ID x .078" Thk,
11	205369R91	1	BEARING, NEEDLE,
15	235976A2	2	TUBE,
16	235977A2	2	TUBE,
17	238-5014	8	O-RING, -014, 70 Duro, .489" ID x .070" Thk,
18	87433655	1	GASKET,
19	87433653	1	PLATE ASSY., , See Figure 06-06
26	861-10030	2	SCREW, Hex Soc Hd, M10 x 30, 12.9, M10 x 30; 12.9
27	628-10035	6	BOLT, Hex, M10 x 35, 10.9, Full Thd, M10 x 35; 10.9
28	614-10040	2	BOLT, Hex, M10 x 40, 8.8, Full Thd, M10 x 40; 8.8
30	235977A2	2	TUBE,
31	238-5014	4	O-RING, -014, 70 Duro, .489" ID x .070" Thk,
32	300827A1	1	TUBE,
33	238-5019	2	O-RING, -019, 70 Duro, .801" ID x .070" Thk,
34	87424932	1	GASKET,
35	87444975	1	PLATE, , See Figure 06-07
37	861-10035	4	SCREW, Hex Soc Hd, M10 x 35, 12.9, M10 x 35; 12.9
40	93103C1	1	UNION, , With Creep Speed
41	238-6012	1	O-RING, -012, 90 Duro, .364" ID x .070" Thk,
42	237-6008	1	O-RING, 8-1, 90 Duro, .644" ID x .087" Thk,
43	256955A2	1	TUBE, , With Creep Speed
44	218-5351	1	CONNECTOR, HYD., 3/4"-16, 37є x 9/16"-18, O-Ring, 3/4 fl x 9/16 Or, Inc. 45, With Creep Speed
45	237-6006	1	O-RING, 6-1, 90 Duro, .468" ID x .078" Thk,
50	93105C1	1	UNION, , With Creep Speed
51	238-6014	1	O-RING, -014, 90 Duro, .489" ID x .070" Thk,
52	237-6008	1	O-RING, 8-1, 90 Duro, .644" ID x .087" Thk,
53	311670A1	1	TUBE, , With Creep Speed
54	218-5103	1	ELBOW, 90є, 7/16"-20, 37є x 7/16"-20, O-Ring, 7/16 fl x adj Or, Inc. 55, With Creep Speed
55	237-6004	1	O-RING, 4-1, 90 Duro, .351" ID x .072" Thk,
60	214389	2	PLUG, Hex Hd, 3/4"-16 ORB, 3/4 Or, Inc. 61, Without Creep Speed
61	237-6008	2	O-RING, 8-1, 90 Duro, .644" ID x .087" Thk,
65	700-305	1	ELBOW, 90є, 13/16"-18 ORFS x M18 x 1.5 ORB, 13/16 fc sl x 18 Or, Inc. 66, 67
66	238-6014	1	O-RING, -014, 90 Duro, .489" ID x .070" Thk,
67	637-63153	1	O-RING, Cl 6, 15.3MM ID x 2.2 Thk, 15,3 ID x 2,2
68	295149A1	1	TUBE,

сылка	Номер детали	Кол-во	Описание
69	295316A1	1	DIPSTICK,
70	814-16080	2	BOLT, Hex, M16 x 80, 8.8,
71	896-12016	2	WASHER, M17.5 x 30 x 4, HT, 17,5 x 30 x 4 mm

MX285 CASE IH MAGNUM TRACTOR (NORTH AMERICA)

06-05 SPEED TRANSMISSION - HOUSING, ASN AJB0355923

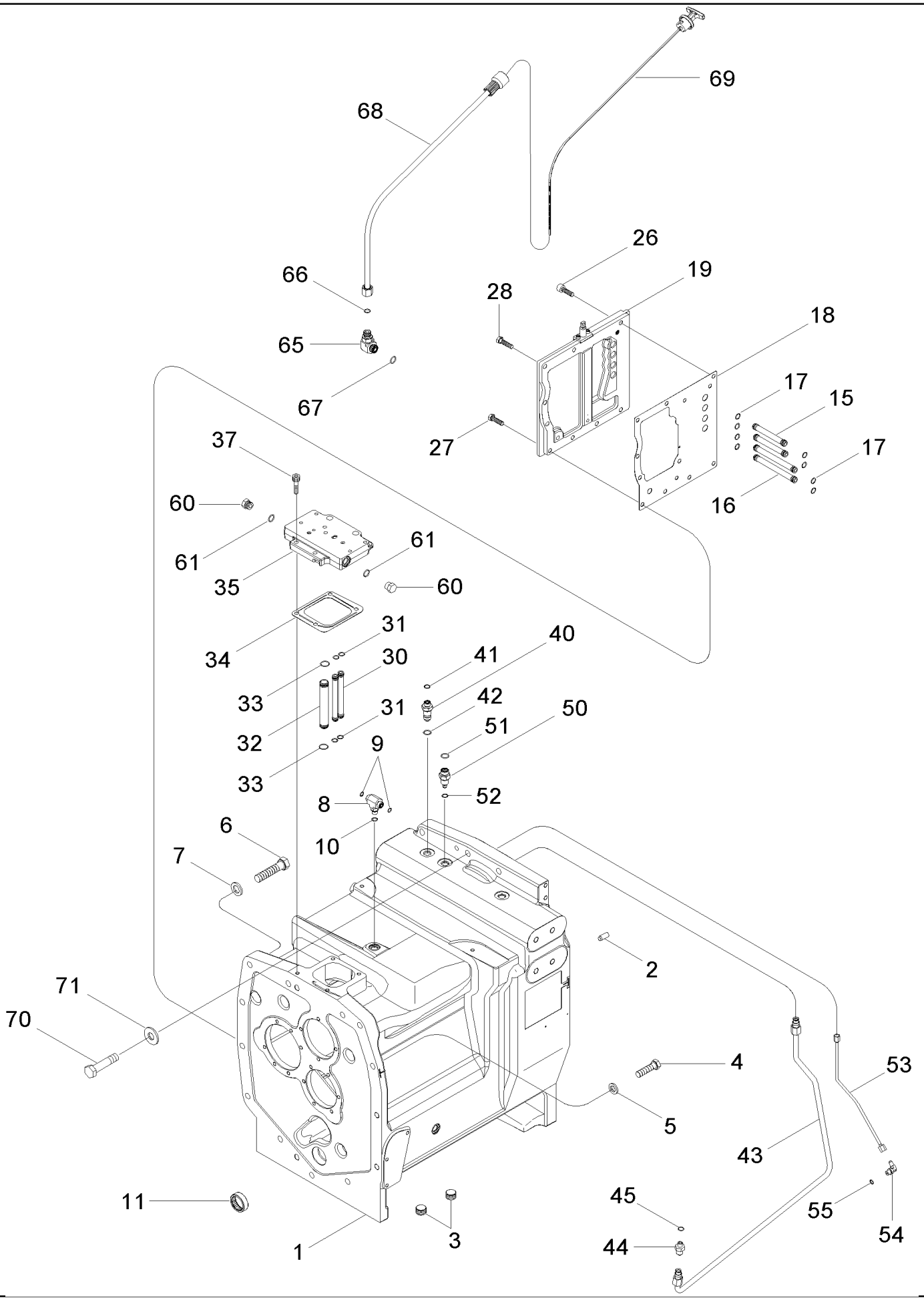

MX285 CASE IH MAGNUM TRACTOR (NORTH AMERICA)

06-05 SPEED TRANSMISSION - HOUSING, ASN AJB0355923

ссылка	Номер детали	Кол-во	Описание
1	87429567	1	HOUSING ASSY., Inc. 2, 3
2	837-12030	2	DOWEL, M12 x 30, 12 x 30 mm
3	192792A1	2	PLUG, 3/4 in
4	828-16060	7	BOLT, Hex, M16 x 60, 10.9, Full Thd, Hex, M16 x 60, 10.9, Full Thd
5	896-11016	9	WASHER, M17.5 x 30 x 4, HT, 17,5 x 30 x 4 mm
6	828-16090	4	BOLT, Hex, M16 x 90, 10.9, M16 x 90; 10.9
7	896-12016	4	WASHER, M17.5 x 30 x 4, HT, 17,5 x 30 x 4 mm
8	201-401	1	TEE, 11/16"-16 x 9/16"-18 Br, ORFS, 11/16 fc sl x 9/16 Or, Inc. 9, 10
9	238-6012	2	O-RING, -012, 90 Duro, .364" ID x .070" Thk,
10	237-6006	1	O-RING, 6-1, 90 Duro, .468" ID x .078" Thk,
11	205369R91	1	BEARING, NEEDLE,
15	235976A2	2	TUBE,
16	235977A2	2	TUBE,
17	238-5014	8	O-RING, -014, 70 Duro, .489" ID x .070" Thk,
18	87433655	1	GASKET,
19	87433653	1	PLATE ASSY., , See Figure 06-06
26	861-10030	2	SCREW, Hex Soc Hd, M10 x 30, 12.9, M10 x 30; 12.9
27	628-10035	8	BOLT, Hex, M10 x 35, 10.9, Full Thd, M10 x 35; 10.9
28	614-10040	2	BOLT, Hex, M10 x 40, 8.8, Full Thd, M10 x 40; 8.8
30	235977A2	2	TUBE,
31	238-5014	4	O-RING, -014, 70 Duro, .489" ID x .070" Thk,
32	300827A1	1	TUBE,
33	238-5019	2	O-RING, -019, 70 Duro, .801" ID x .070" Thk,
34	87424932	1	GASKET,
35	87444975	1	PLATE, , See Figure 06-07
37	861-10035	4	SCREW, Hex Soc Hd, M10 x 35, 12.9, M10 x 35; 12.9
40	93103C1	1	UNION, , With Creep Speed
41	238-6012	1	O-RING, -012, 90 Duro, .364" ID x .070" Thk,
42	237-6008	1	O-RING, 8-1, 90 Duro, .644" ID x .087" Thk,
43	256955A2	1	TUBE, , With Creep Speed
44	218-5351	1	CONNECTOR, HYD., 3/4"-16, 37є x 9/16"-18, O-Ring, 3/4 fl x 9/16 Or, Inc. 45, With Creep Speed
45	237-6006	1	O-RING, 6-1, 90 Duro, .468" ID x .078" Thk,
50	93105C1	1	UNION, , With Creep Speed
51	238-6014	1	O-RING, -014, 90 Duro, .489" ID x .070" Thk,
52	237-6008	1	O-RING, 8-1, 90 Duro, .644" ID x .087" Thk,
53	311670A1	1	TUBE, , With Creep Speed
54	218-5103	1	ELBOW, 90є, 7/16"-20, 37є x 7/16"-20, O-Ring, 7/16 fl x adj Or, Inc. 55, With Creep Speed
55	237-6004	1	O-RING, 4-1, 90 Duro, .351" ID x .072" Thk,
60	214389	2	PLUG, Hex Hd, 3/4"-16 ORB, 3/4 Or, Inc. 61, Without Creep Speed
61	237-6008	2	O-RING, 8-1, 90 Duro, .644" ID x .087" Thk,
65	700-305	1	ELBOW, 90є, 13/16"-18 ORFS x M18 x 1.5 ORB, 13/16 fc sl x 18 Or, Inc. 66, 67
66	238-6014	1	O-RING, -014, 90 Duro, .489" ID x .070" Thk,
67	637-63153	1	O-RING, Cl 6, 15.3MM ID x 2.2 Thk, 15,3 ID x 2,2
68	295149A1	1	TUBE,
69	295316A1	1	DIPSTICK,

ссылка	Номер детали	Кол-во	Описание
70	814-16080	2	BOLT, Hex, M16 x 80, 8.8,
71	896-12016	2	WASHER, M17.5 x 30 x 4, HT, 17,5 x 30 x 4 mm

MX285 CASE IH MAGNUM TRACTOR (NORTH AMERICA)

06-06 PLATE ASSEMBLY - VALVE MOUNTING, LEFT HAND SIDE

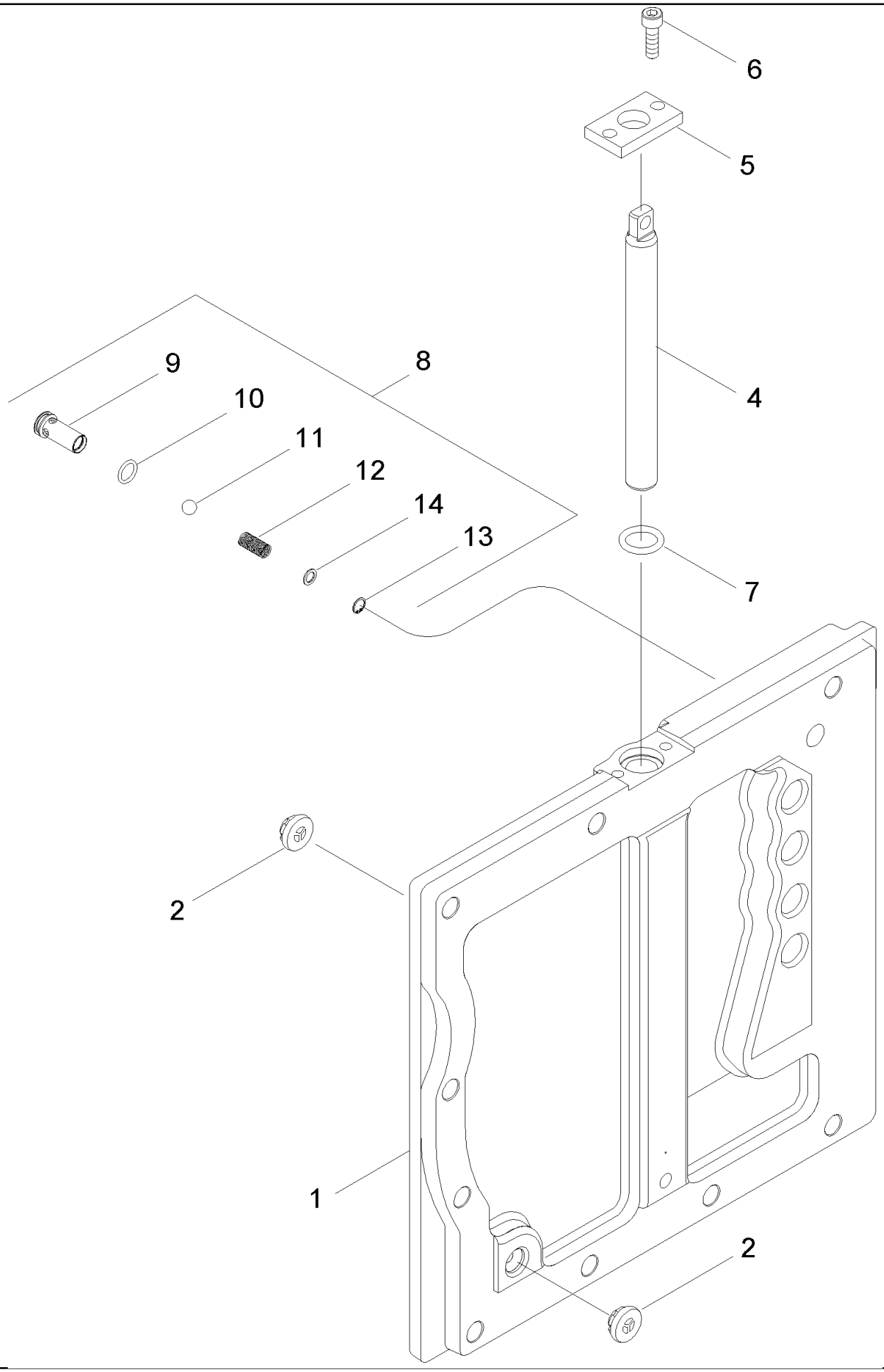

MX285 CASE IH MAGNUM TRACTOR (NORTH AMERICA)

06-06 PLATE ASSEMBLY - VALVE MOUNTING, LEFT HAND SIDE

ссылка	Номер детали	Кол-во	Описание
	445535A2	1	PLATE ASSY., Inc. 1 - 14, BSN AJB0304805
	87433653	1	PLATE ASSY., Inc. 1 - 14, ASN AJB0304805
1	NSS	1	NOT SERVICED SEPARATELY, Plate
2	1994615C2	2	VALVE, CHECK,
4	234802A2	1	PIN,
5	315904A1	1	PLATE, RETAINING,
6	863-6020	2	SCREW, Hex Soc Hd, M6 x 20, 12.9, M6 x 20; 12.9
7	238-5208	1	O-RING, -208, 70 Duro, .609" ID x .139" Thk,
8	445492A2	1	VALVE, CHECK, Inc. 9 - 14
9	NSS	1	NOT SERVICED SEPARATELY, Body
10	238-5012	1	O-RING, -012, 70 Duro, .364" ID x .070" Thk,
11	211-1009	1	BALL, 9/32; 24,CRS
12	445494A1	1	SPRING, VALVE,
13	100-2131	1	RING, SNAP, 0.312", Int, #31,
14	86988656	1	WASHER, SPRING,

MX285 CASE IH MAGNUM TRACTOR (NORTH AMERICA)

06-07 PLATE ASSEMBLY - VALVE MOUNTING, TOP

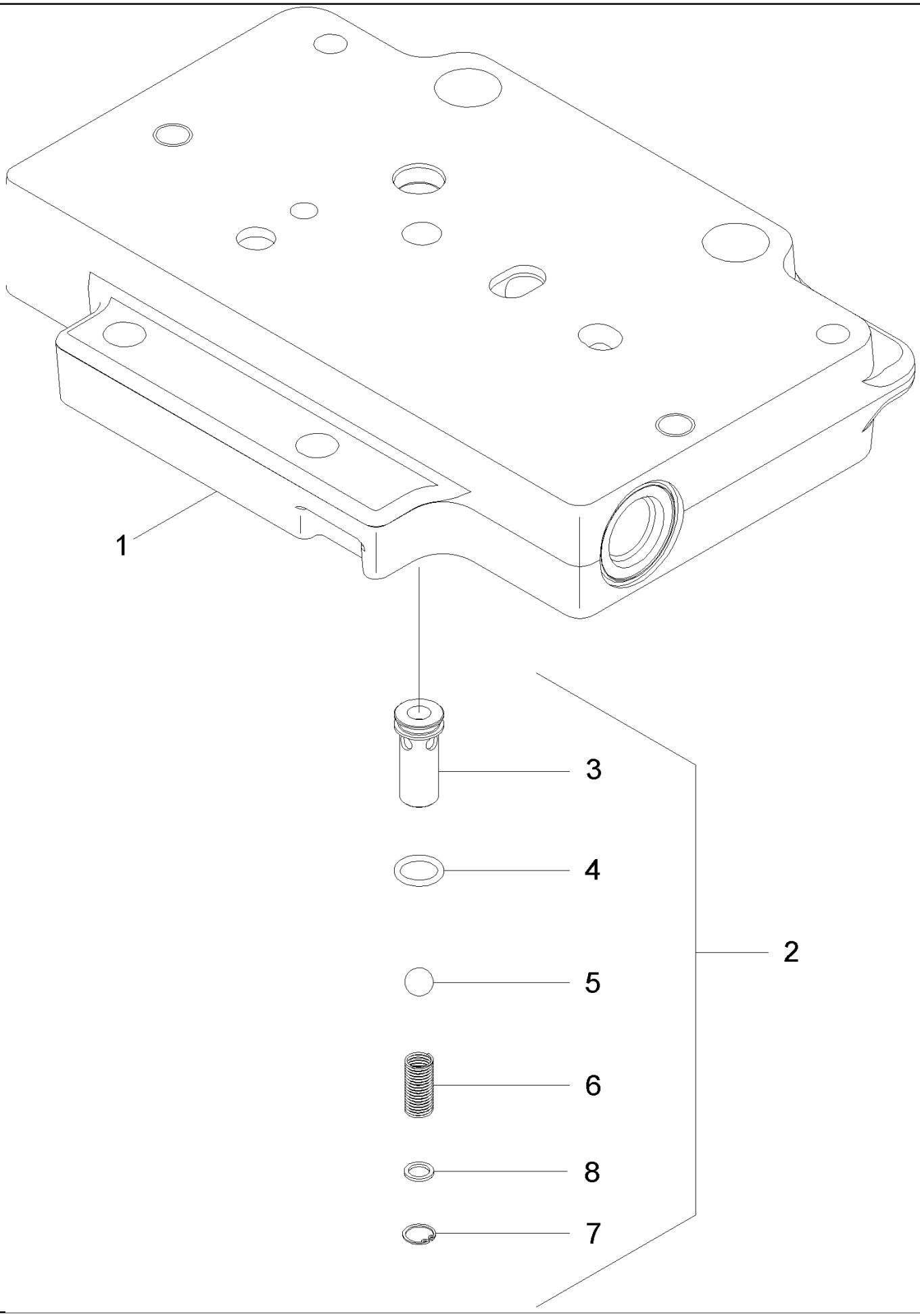

MX285 CASE IH MAGNUM TRACTOR (NORTH AMERICA)

06-07 PLATE ASSEMBLY - VALVE MOUNTING, TOP

ссылка	Номер детали	Кол-во	Описание
	445533A2	1	PLATE ASSY., Inc. 1 - 8, BSN AJB0355338
	87444975	1	PLATE, Inc. 1 - 8, ASN AJB0355338
1	445532A2	1	PLATE, , BSN AJB0355338
1	87444976	1	PLATE, , ASN AJB0355338
2	445492A2	1	VALVE, CHECK, Inc. 3 - 8
3	NSS	1	NOT SERVICED SEPARATELY, Body
4	238-5012	1	O-RING, -012, 70 Duro, .364" ID x .070" Thk,
5	211-1009	1	BALL, 9/32; 24,CRS
6	445494A1	1	SPRING, VALVE,
7	100-2131	1	RING, SNAP, 0.312", Int, #31,
8	86988656	1	WASHER, SPRING,

06-08 SPEED TRANSMISSION - INPUT SHAFT WITHOUT CREEP SPEED, BSN AJB0361241

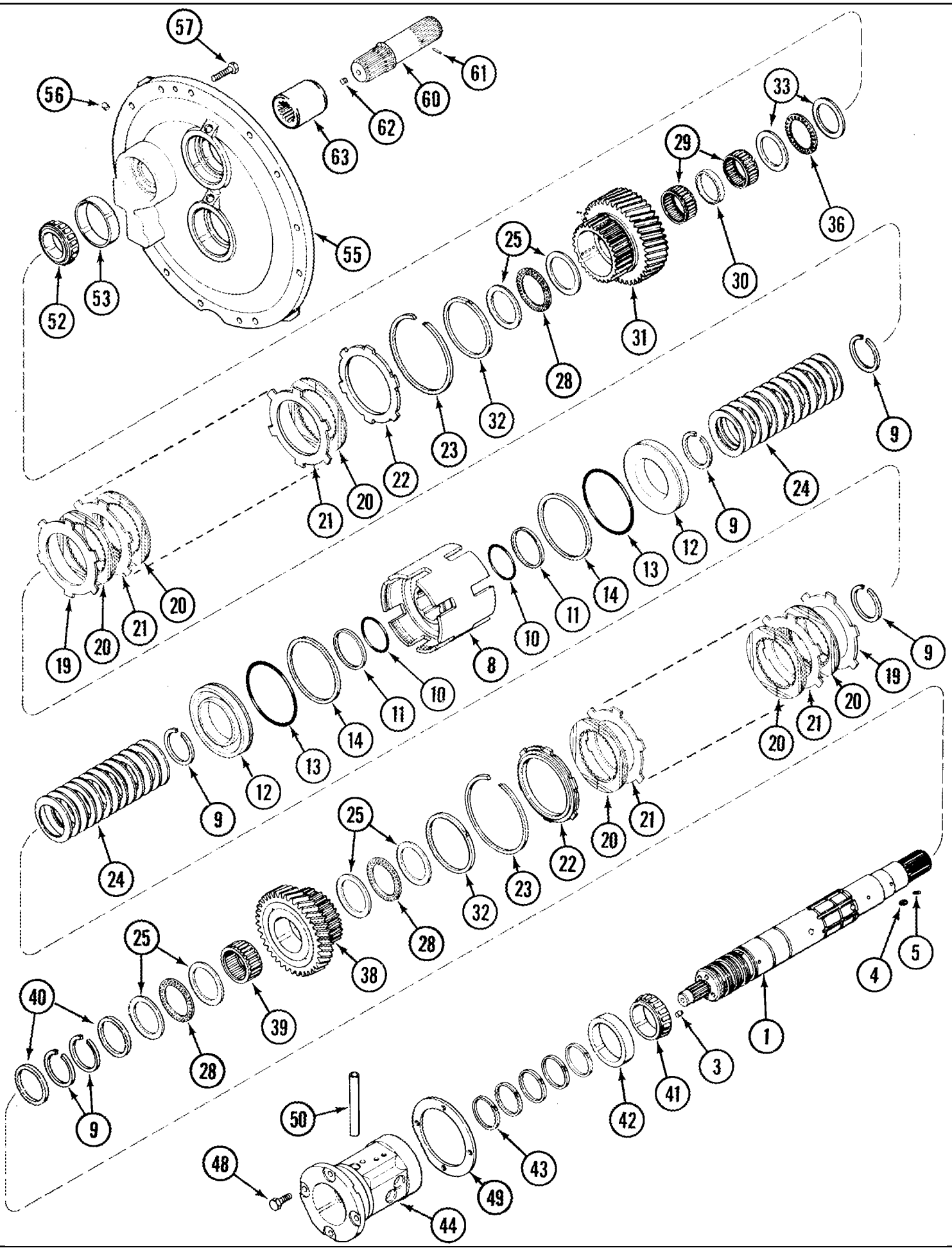

MX285 CASE IH MAGNUM TRACTOR (NORTH AMERICA)

06-08 SPEED TRANSMISSION - INPUT SHAFT WITHOUT CREEP SPEED, BSN AJB0361241

ссылка	Номер детали	Кол-во	Описание
1	225199A1	1	SHAFT ASSY., Inc. 3 - 5
3	1342851C1	2	PLUG, 10 mm
4	1963888C1	2	PIN,
5	38-3605	4	PIN, 3/32" x 5/16", Coiled, 3/32" x 5/16", Coiled
8	86987595	1	CARRIER,
9	93350C1	6	RING,
10	1286081C1	2	O-RING,
11	1286076C1	2	RING,
12	242492A5	2	PISTON,
13	1286083C1	2	O-RING,
14	1286079C1	2	RING,
19	128114A1	2	DISC,
20	86990276	14	DISC,
21	92934C2	12	DISC,
22	1342645C3	2	DISC, CLUTCH,
23	1285996C1	2	RING, SNAP,
24	1286012C2	26	WASHER,
25	1286043C1	6	WASHER, THRUST,
28	572182R1	3	BEARING, THRUST,
29	80907C1	2	BEARING, NEEDLE,
30	93297C1	1	SPACER,
31	1342495C1	1	PINION, 37T
32	1286052C1	2	RING,
33	1286042C1	2	WASHER, THRUST,
36	K620185	1	BEARING, THRUST,
38	1285985C1	1	GEAR, WHEEL, 34T
39	1286016C1	1	BEARING, NEEDLE,
40	1286039C1	2	SPACER,
41	364465C1	1	BEARING, CONE,
42	258452C1	1	BEARING, CUP,
43	1286026C1	5	RING,
44	254574A2	1	CAGE,
48	613-10030	4	BOLT, Hex, M10 x 30, 8.8, Full Thd, M10 x 30
49	1286071C1	2	SHIM, 0,08 mm
49	1286072C1	2	SHIM, 0,10 mm
49	1286073C1	2	SHIM, 0,13 mm
49	1286074C1	2	SHIM, 0,30 mm
49	1286075C1	2	SHIM, 0,76 mm
50	1981207C1	1	TUBE,
52	627639R1	1	BEARING, CONE,
53	ST970	1	BEARING, CUP,
55	258470A2	1	SUPPORT, Inc. 8
56	37-188	8	DOWEL, 1/2" x 1/2", 1/2 x 1/2 in
57	613-12040	11	BOLT, Hex, M12 x 40, 8.8, Full Thd, M12 x 40
60	282726A1	1	SHAFT, Inc. 61, 62

MX285 CASE IH MAGNUM TRACTOR (NORTH AMERICA)

06-08 SPEED TRANSMISSION - INPUT SHAFT WITHOUT CREEP SPEED, BSN AJB0361241

ссылка	Номер детали	Кол-во	Описание
61	38-3605	1	PIN, 3/32" x 5/16", Coiled, 3/32" x 5/16", Coiled
62	284151A1	1	SCREW, M10 x 10
63	226637A1	1	COUPLING, SPLINED,

MX285 CASE IH MAGNUM TRACTOR (NORTH AMERICA)

06-08A SPEED TRANSMISSION - INPUT SHAFT WITHOUT CREEP SPEED, ASN AJB0361241

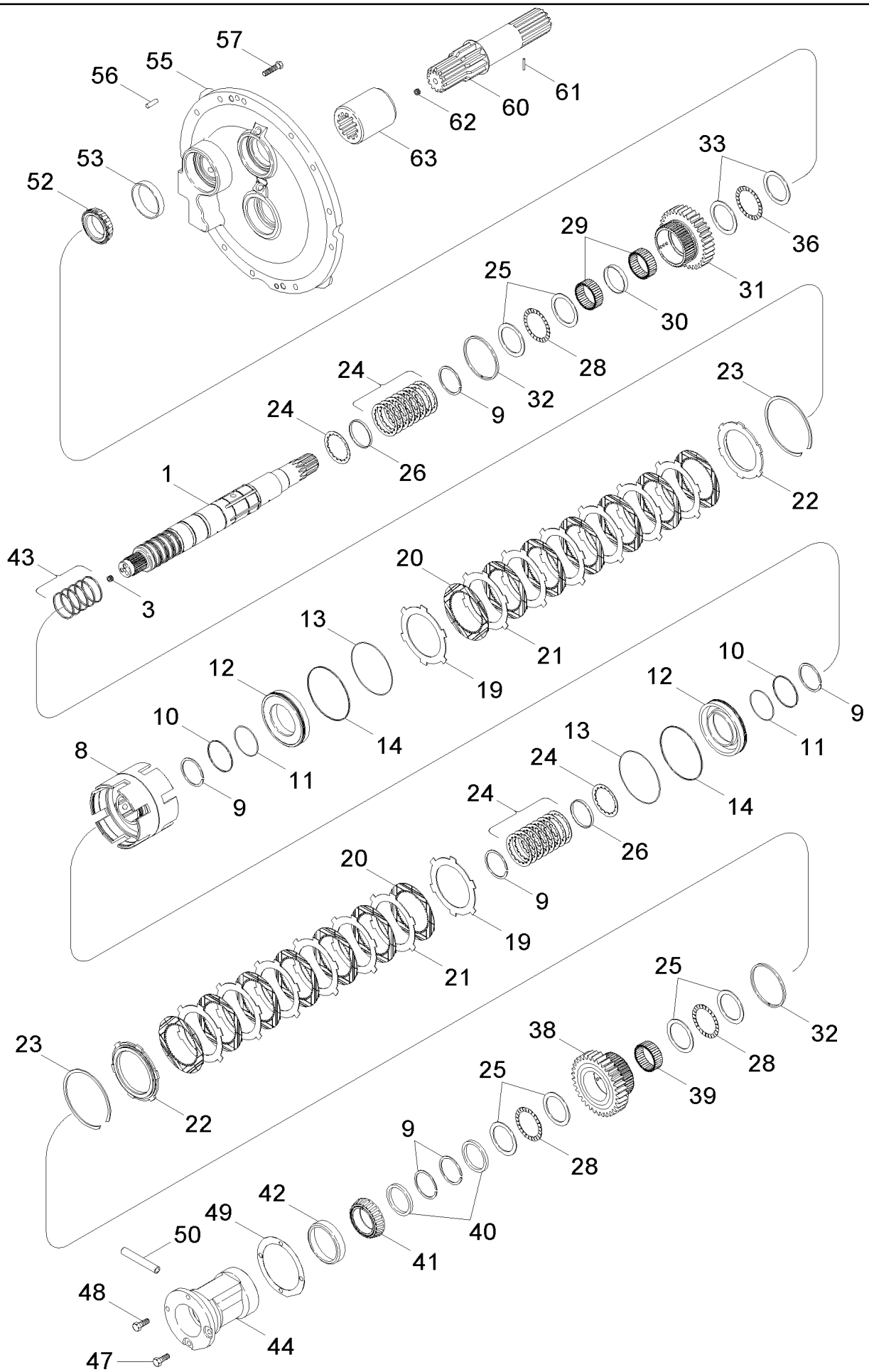

MX285 CASE IH MAGNUM TRACTOR (NORTH AMERICA)

06-08A SPEED TRANSMISSION - INPUT SHAFT WITHOUT CREEP SPEED, ASN AJB0361241

ссылка	Номер детали	Кол-во	Описание
1	87434648	1	SHAFT ASSY., Inc. 3
3	1342851C1	2	PLUG, 10 mm
8	86987595	1	CARRIER,
9	101-11250	6	RING, SNAP, #250, 2.356, Ext,
10	1286081C1	2	O-RING,
11	1286076C1	2	RING,
12	242492A5	2	PISTON,
13	1286083C1	2	O-RING,
14	1286079C1	2	RING,
19	128114A1	2	DISC,
20	86990276	14	DISC,
21	92934C2	12	DISC,
22	1342645C3	2	DISC, CLUTCH,
23	1285996C1	2	RING, SNAP,
24	87425389	18	SPRING, BELLEVILLE,
25	1286043C1	6	WASHER, THRUST,
26	87434656	2	RING, Lube
28	572182R1	3	BEARING, THRUST,
29	80907C1	2	BEARING, NEEDLE,
30	93297C1	1	SPACER,
31	1342495C1	1	PINION, 37T
32	1286052C1	2	RING,
33	1286042C1	2	WASHER, THRUST,
36	87012543	1	BEARING, THRUST,
38	1285985C1	1	GEAR, WHEEL, 34T
39	1286016C1	1	BEARING, NEEDLE,
40	1286039C1	2	SPACER,
41	364465C1	1	BEARING, CONE,
42	258452C1	1	BEARING, CUP,
43	1286026C1	5	RING,
44	254574A2	1	CAGE,
47	613-10025	2	BOLT, Hex, M10 x 25, 8.8, Full Thd,
48	613-10030	2	BOLT, Hex, M10 x 30, 8.8, Full Thd,
49	1286071C1	2	SHIM, 0,08 mm
49	1286072C1	2	SHIM, 0,10 mm
49	1286073C1	2	SHIM, 0,13 mm
49	1286074C1	2	SHIM, 0,30 mm
49	1286075C1	2	SHIM, 0,76 mm
50	1981207C1	1	TUBE,
52	627639R1	1	BEARING, CONE,
53	ST970	1	BEARING, CUP,
55	258470A2	1	SUPPORT, Inc. 56
56	37-188	8	DOWEL, 1/2" x 1/2",
57	613-12040	11	BOLT, Hex, M12 x 40, 8.8, Full Thd,
60	282726A1	1	SHAFT, Inc. 61, 62

ссылка	Номер детали	Кол-во	Описание
61	38-3605	1	PIN, 3/32" x 5/16", Coiled,
62	284151A1	1	SCREW, M10 x 10
63	226637A1	1	COUPLING, SPLINED,

06-09 SPEED TRANSMISSION - INPUT SHAFT WITH CREEP SPEED, BSN AJB0361241

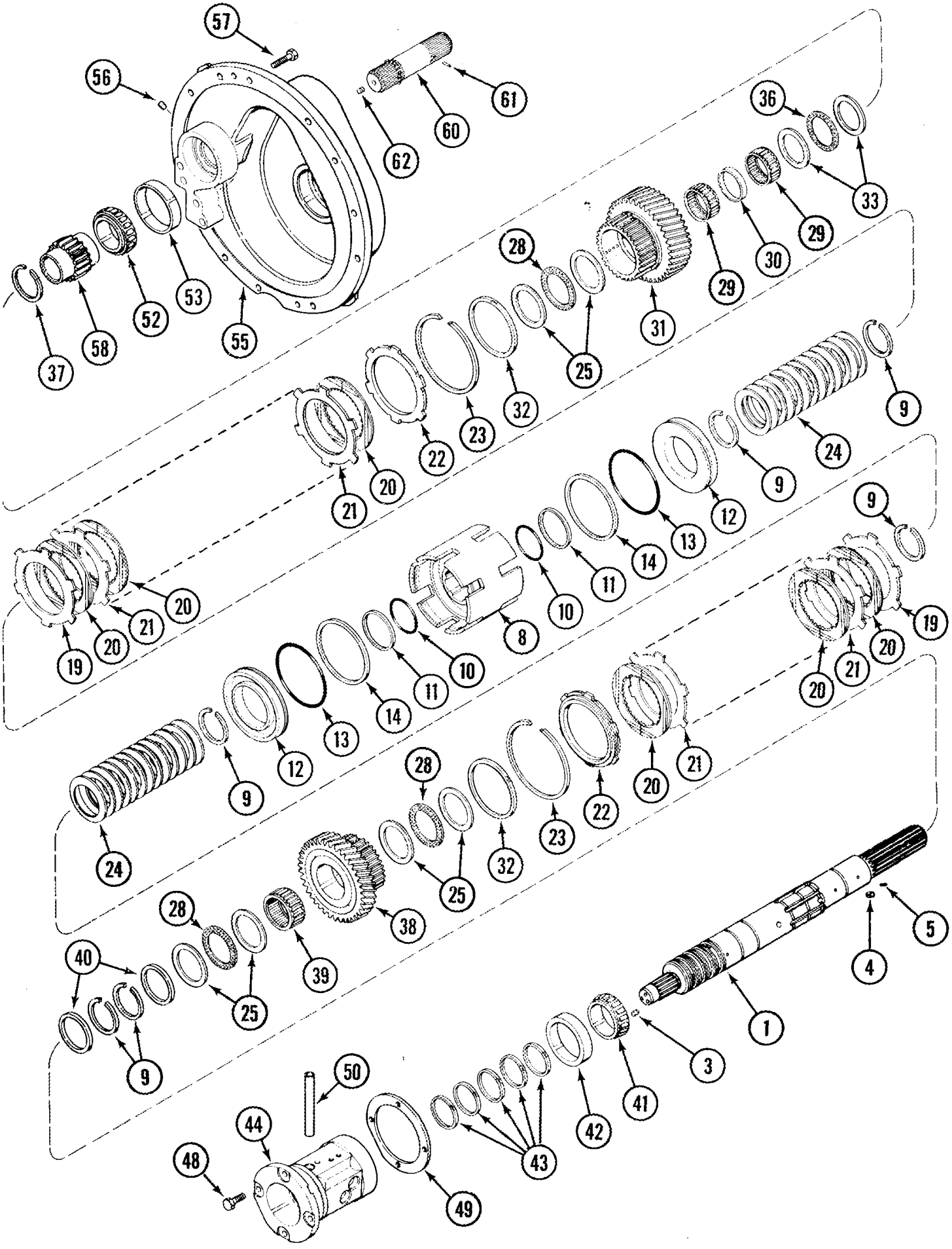

MX285 CASE IH MAGNUM TRACTOR (NORTH AMERICA)

06-09 SPEED TRANSMISSION - INPUT SHAFT WITH CREEP SPEED, BSN AJB0361241

ссылка	Номер детали	Кол-во	Описание
1	225200A1	1	SHAFT ASSY., Inc. 3 - 5
3	1342851C1	2	PLUG, 10 mm
4	1963888C1	2	PIN,
5	38-3605	5	PIN, 3/32" x 5/16", Coiled, 3/32" x 5/16", Coiled
8	86987595	1	CARRIER,
9	93350C1	6	RING,
10	1286081C1	2	O-RING,
11	1286076C1	2	RING,
12	242492A5	2	PISTON,
13	1286083C1	2	O-RING,
14	1286079C1	2	RING,
19	128114A1	2	DISC,
20	86990276	14	DISC,
21	92934C2	12	DISC,
22	1342645C3	2	DISC, CLUTCH,
23	1285996C1	2	RING, SNAP,
24	1286012C2	26	WASHER,
25	1286043C1	6	WASHER, THRUST,
28	572182R1	3	BEARING, THRUST,
29	80907C1	2	BEARING, NEEDLE,
30	93297C1	1	SPACER,
31	1342495C1	1	PINION, 37T
32	1286052C1	2	RING,
33	1286042C1	2	WASHER, THRUST,
36	K620185	1	BEARING, THRUST,
37	92793C1	1	RING,
38	1285985C1	1	GEAR, WHEEL, 34T
39	1286016C1	1	BEARING, NEEDLE,
40	1286039C1	2	SPACER,
41	364465C1	1	BEARING, CONE,
42	258452C1	1	BEARING, CUP,
43	1286026C1	5	RING,
44	254574A2	1	CAGE,
48	613-10030	4	BOLT, Hex, M10 x 30, 8.8, Full Thd, M10 x 30
49	1286071C1	2	SHIM, 0,08 mm
49	1286072C1	2	SHIM, 0,10 mm
49	1286073C1	2	SHIM, 0,13 mm
49	1286074C1	2	SHIM, 0,30 mm
49	1286075C1	2	SHIM, 0,76 mm
50	1981207C1	1	TUBE,
52	L33289	1	BEARING, CONE, 2-1/4 inch ID
53	105497H	1	BEARING, CUP,
55	256235A2	1	SUPPORT ASSY., Inc. 56
56	37-188	9	DOWEL, 1/2" x 1/2", 1/2 x 1/2 in
57	613-12040	11	BOLT, Hex, M12 x 40, 8.8, Full Thd, M12 x 40

MX285 CASE IH MAGNUM TRACTOR (NORTH AMERICA)

06-09 SPEED TRANSMISSION - INPUT SHAFT WITH CREEP SPEED, BSN AJB0361241

ссылка	Номер детали	Кол-во	Описание
58	230042A1	1	GEAR, 17T
60	282724A1	1	SHAFT, Inc. 61, 62
61	38-3605	1	PIN, 3/32" x 5/16", Coiled, 3/32" x 5/16", Coiled
62	284151A1	1	SCREW, M10 x 10

06-09A SPEED TRANSMISSION - INPUT SHAFT WITH CREEP SPEED, ASN AJB0361241

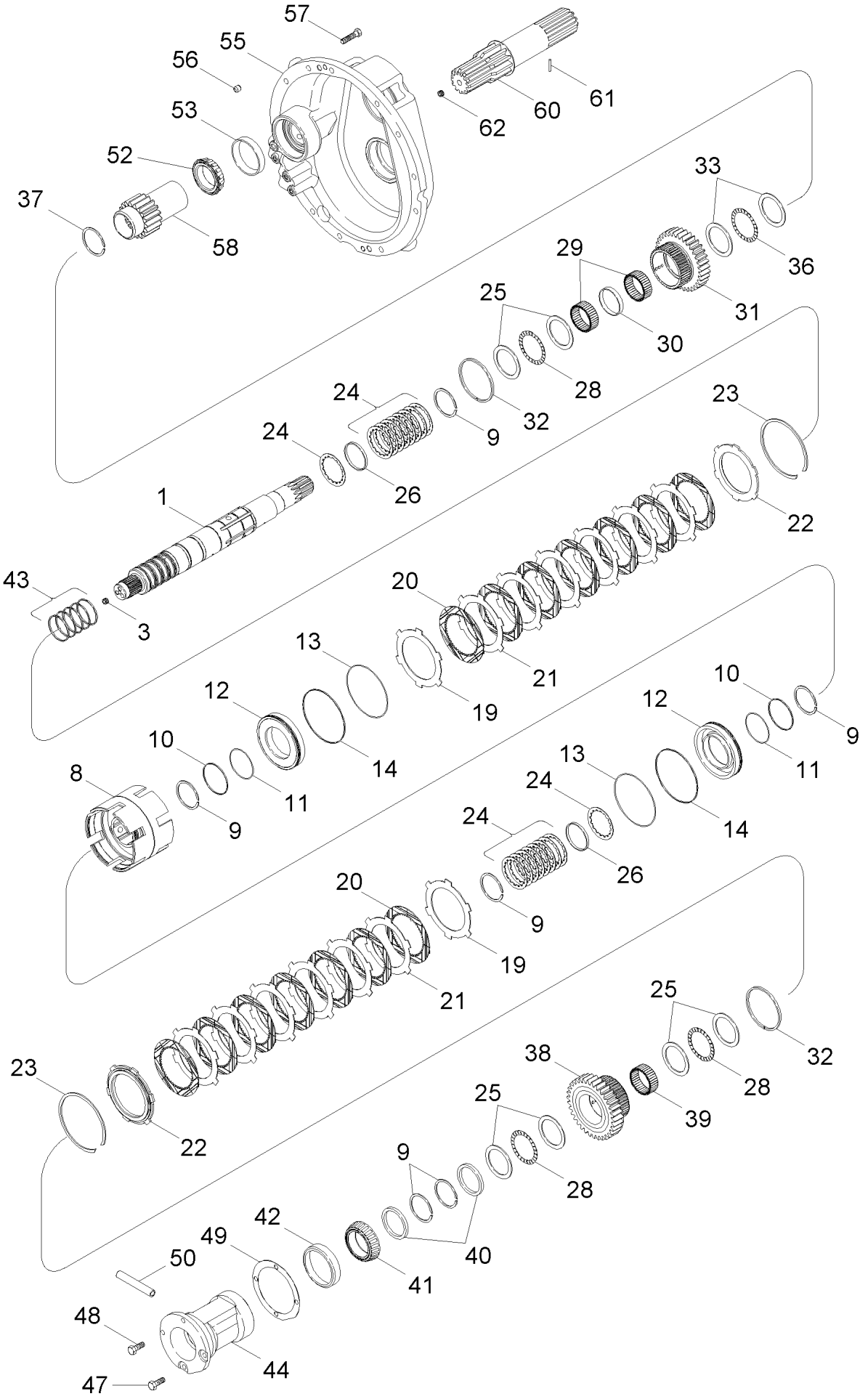

MX285 CASE IH MAGNUM TRACTOR (NORTH AMERICA)

06-09A SPEED TRANSMISSION - INPUT SHAFT WITH CREEP SPEED, ASN AJB0361241

ссылка	Номер детали	Кол-во	Описание
1	87425385	1	SHAFT ASSY., Inc. 3
3	1342851C1	2	PLUG, 10 mm
8	86987595	1	CARRIER,
9	101-11250	6	RING, SNAP, #250, 2.356, Ext,
10	1286081C1	2	O-RING,
11	1286076C1	2	RING,
12	242492A5	2	PISTON,
13	1286083C1	2	O-RING,
14	1286079C1	2	RING,
19	128114A1	2	DISC,
20	86990276	14	DISC,
21	92934C2	12	DISC,
22	1342645C3	2	DISC, CLUTCH,
23	1285996C1	2	RING, SNAP,
24	87425389	18	SPRING, BELLEVILLE,
25	1286043C1	6	WASHER, THRUST,
26	87434656	2	RING, Lube
28	572182R1	3	BEARING, THRUST,
29	80907C1	2	BEARING, NEEDLE,
30	93297C1	1	SPACER,
31	1342495C1	1	PINION, 37T
32	1286052C1	2	RING,
33	1286042C1	2	WASHER, THRUST,
36	87012543	1	BEARING, THRUST,
37	92793C1	1	RING,
38	1285985C1	1	GEAR, WHEEL, 34T
39	1286016C1	1	BEARING, NEEDLE,
40	1286039C1	2	SPACER,
41	364465C1	1	BEARING, CONE,
42	258452C1	1	BEARING, CUP,
43	1286026C1	5	RING,
44	254574A2	1	CAGE,
47	613-10025	2	BOLT, Hex, M10 x 25, 8.8, Full Thd,
48	613-10030	2	BOLT, Hex, M10 x 30, 8.8, Full Thd,
49	1286071C1	2	SHIM, 0,08 mm
49	1286072C1	2	SHIM, 0,10 mm
49	1286073C1	2	SHIM, 0,13 mm
49	1286074C1	2	SHIM, 0,30 mm
49	1286075C1	2	SHIM, 0,76 mm
50	1981207C1	1	TUBE,
52	L33289	1	BEARING, CONE, 2-1/4 inch ID
53	105497H	1	BEARING, CUP,
55	87439859	1	CARRIER, Inc. 56
56	37-188	9	DOWEL, 1/2" x 1/2",
57	613-12040	11	BOLT, Hex, M12 x 40, 8.8, Full Thd,

ссылка	Номер детали	Кол-во	Описание
58	230042A1	1	GEAR, 17T, Creeper Drive
60	282724A1	1	SHAFT, Inc. 61, 62
61	38-3605	1	PIN, 3/32" x 5/16", Coiled,
62	284151A1	1	SCREW, M10 x 10

MX285 CASE IH MAGNUM TRACTOR (NORTH AMERICA)

06-10 SPEED TRANSMISSION - COUNTERSHAFT WITHOUT CREEP SPEED

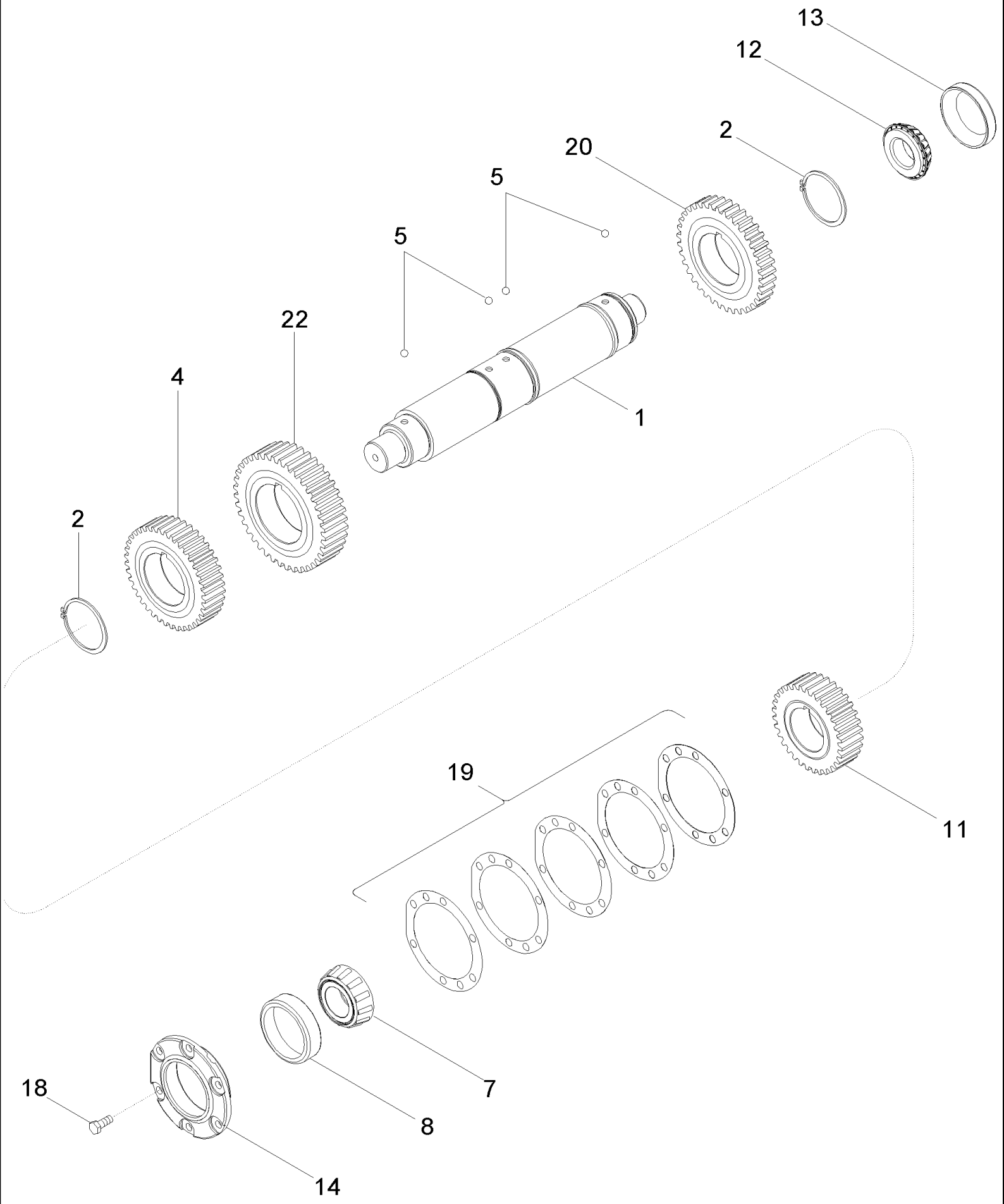

MX285 CASE IH MAGNUM TRACTOR (NORTH AMERICA)

06-10 SPEED TRANSMISSION - COUNTERSHAFT WITHOUT CREEP SPEED

сылка	Номер детали	Кол-во	Описание
1	1342253C2	1	SHAFT,
2	100-11293	2	RING, SNAP, #293, Ext,
4	1285983C1	1	PINION, Drive, 34T
5	211-1012	4	BALL, 3/8" Dia, 3/8; 24,CRS
7	ST791	1	BEARING, CONE,
8	ST951	1	BEARING, CUP,
11	1285981C1	1	PINION, Drive, 29 T
12	ST2051	1	BEARING, CONE,
13	ST863	1	BEARING, CUP,
14	1286000C3	1	CAGE,
18	613-10025	6	BOLT, Hex, M10 x 25, 8.8, Full Thd, M10 x 25; 8.8
19	120647C2	AR	SHIM, 0,08 mm
19	120648C2	AR	SHIM, 0,10 mm
19	120649C2	AR	SHIM, 0,13 mm
19	120650C2	AR	SHIM, 0,30 mm
19	120651C2	AR	SHIM, 0,76 mm
20	1285989C1	1	PINION, Driven, 37T
22	1285986C1	1	PINION, Driven, 39T

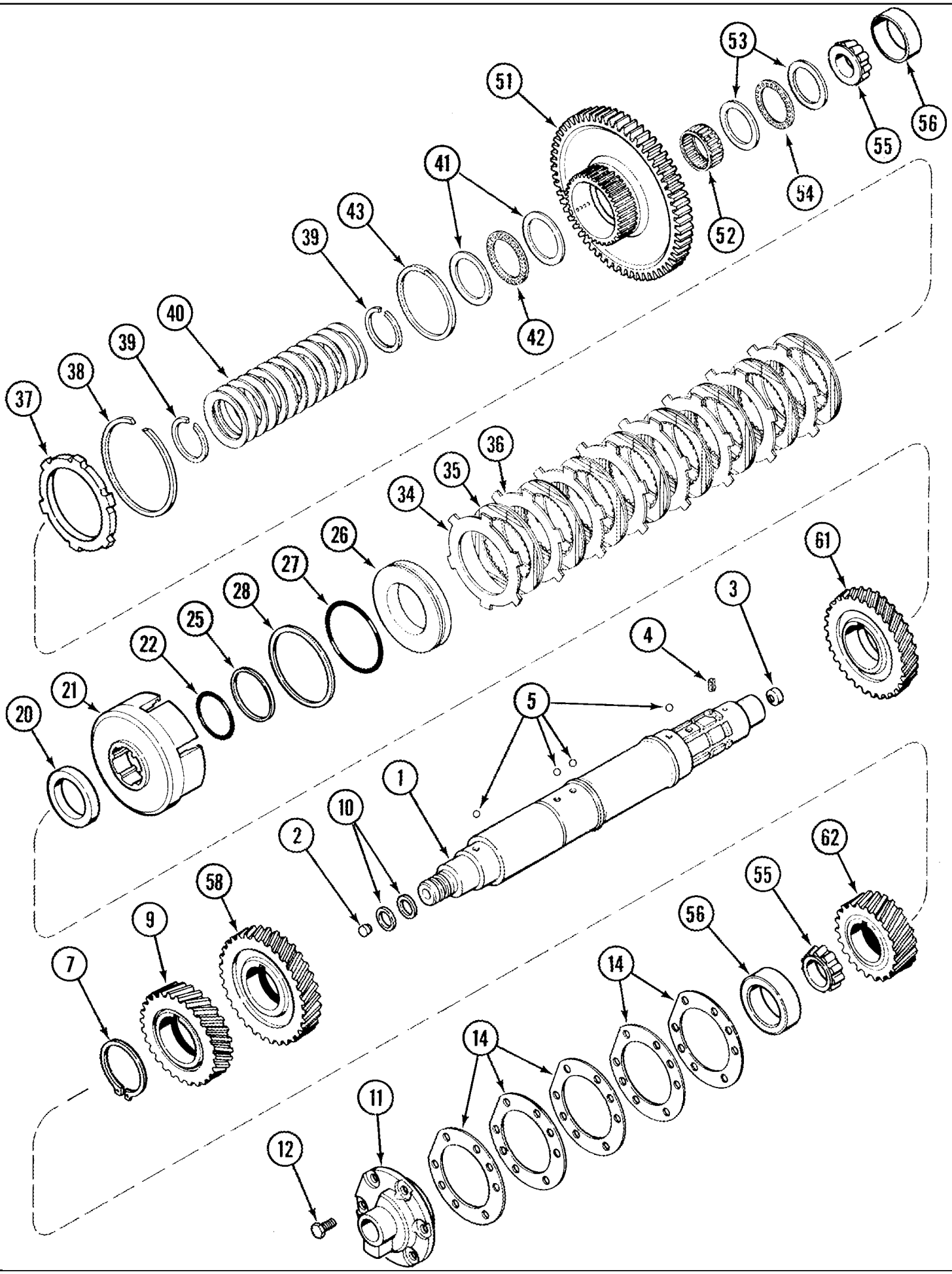
53
51
56
55
54
52
41
43
39
42
40
39
38
37
36
35
34
26
27
28
25
22
21
20
61
3
4
5
1
10
2
62
55
58
9
7
56
14
14
11
12

MX285 CASE IH MAGNUM TRACTOR (NORTH AMERICA)

06-11 SPEED TRANSMISSION - COUNTERSHAFT WITH CREEP SPEED

ссылка	Номер детали	Кол-во	Описание
1	1342318C2	1	SHAFT, Inc. 2 - 4
2	1286084C1	1	PIN, 12 mm
3	92825C1	1	PLUG,
4	1963875C1	1	PIN, SPLIT (COTTER),
5	211-1012	4	BALL, 3/8" Dia, 3/8; 24,CRS
7	100-11293	1	RING, SNAP, #293, Ext,
9	1285983C1	1	PINION, Drive, 34T
10	144242C3	2	RING, 33 mm
11	92828C1	1	CAGE,
12	613-10025	6	BOLT, Hex, M10 x 25, 8.8, Full Thd, M10 x 25; 8.8
14	120647C2	AR	SHIM, 0,08 mm
14	120648C2	AR	SHIM, 0,10 mm
14	120649C2	AR	SHIM, 0.13 mm
14	120650C2	AR	SHIM, 0,30 mm
14	120651C2	AR	SHIM, 0,76 mm
20	92824C1	1	SPACER,
21	86991568	1	CARRIER,
22	1286081C1	1	O-RING,
25	1286076C1	1	RING,
26	242492A5	1	PISTON,
27	1286083C1	1	O-RING,
28	1286079C1	1	RING,
34	128114A1	1	DISC, Separator
35	86990276	8	DISC, Friction
36	92934C2	7	DISC, Separator
37	1342645C3	1	DISC, CLUTCH,
38	1285996C1	1	RING, SNAP,
39	93350C1	2	RING,
40	1286012C2	13	WASHER,
41	1286043C1	2	WASHER, THRUST,
42	572182R1	1	BEARING, THRUST,
43	1286052C1	1	RING,
51	92795C1	1	PINION,
52	80906C1	1	BEARING, NEEDLE,
53	1286042C1	2	WASHER, THRUST,
54	K620185	1	BEARING, THRUST,
55	ST2051	2	BEARING, CONE,
56	ST863	2	BEARING, CUP,
58	1285986C1	1	PINION, Driven, 39T
61	1285989C1	1	PINION, Driven, 37T
62	1285981C1	1	PINION, Drive, 29T

06-12 SPEED TRANSMISSION - OUTPUT SHAFT FRONT CLUTCH, BSN AJB0361241

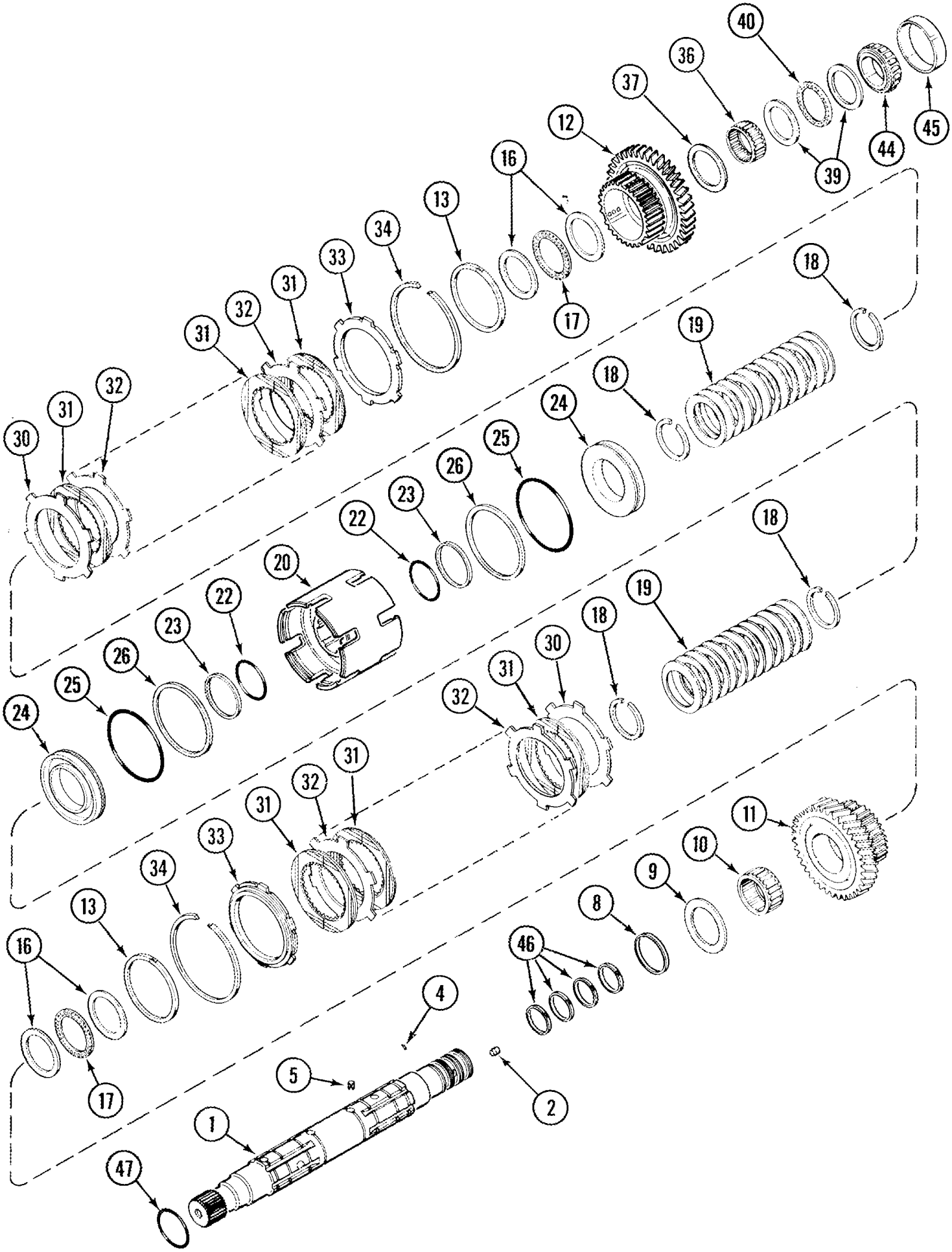

MX285 CASE IH MAGNUM TRACTOR (NORTH AMERICA)

06-12 SPEED TRANSMISSION - OUTPUT SHAFT FRONT CLUTCH, BSN AJB0361241

сылка	Номер детали	Кол-во	Описание
1	230135A2	1	SHAFT, Inc. 2, 4, 5
2	187516A1	3	PLUG, 12 mm
4	38-3605	6	PIN, 3/32" x 5/16", Coiled, 3/32" x 5/16", Coiled
5	1963875C1	4	PIN, SPLIT (COTTER),
8	1286040C2	1	RING,
9	1997888C1	1	WASHER, THRUST,
10	1286016C1	1	BEARING, NEEDLE,
11	1285985C1	1	GEAR, WHEEL, 34T
12	1285987C1	1	PINION, 39T
13	1286052C1	2	RING,
16	1286043C1	4	WASHER, THRUST,
17	572182R1	2	BEARING, THRUST,
18	93350C1	4	RING,
19	1286012C2	24	WASHER,
20	86987594	1	CARRIER,
22	1286081C1	2	O-RING,
23	1286076C1	2	RING,
24	242492A5	2	PISTON,
25	1286083C1	2	O-RING,
26	1286079C1	2	RING,
30	128114A1	2	DISC, Separator
31	86990276	14	DISC, Friction
32	92934C2	12	DISC, Separator
33	1342645C3	2	DISC, CLUTCH,
34	1285996C1	2	RING, SNAP,
36	80907C1	1	BEARING, NEEDLE,
37	1342513C1	1	SPACER,
39	1286042C1	2	WASHER, THRUST,
40	K620185	1	BEARING, THRUST,
44	219530H1	1	BEARING, CONE,
45	ST964	1	BEARING, CUP,
46	1286024C1	4	RING,
47	238-5223	1	O-RING, -223, 70 Duro, 1.609" ID x .139" Thk,

MX285 CASE IH MAGNUM TRACTOR (NORTH AMERICA)

06-12A SPEED TRANSMISSION - OUTPUT SHAFT FRONT CLUTCH, ASN AJB0361241

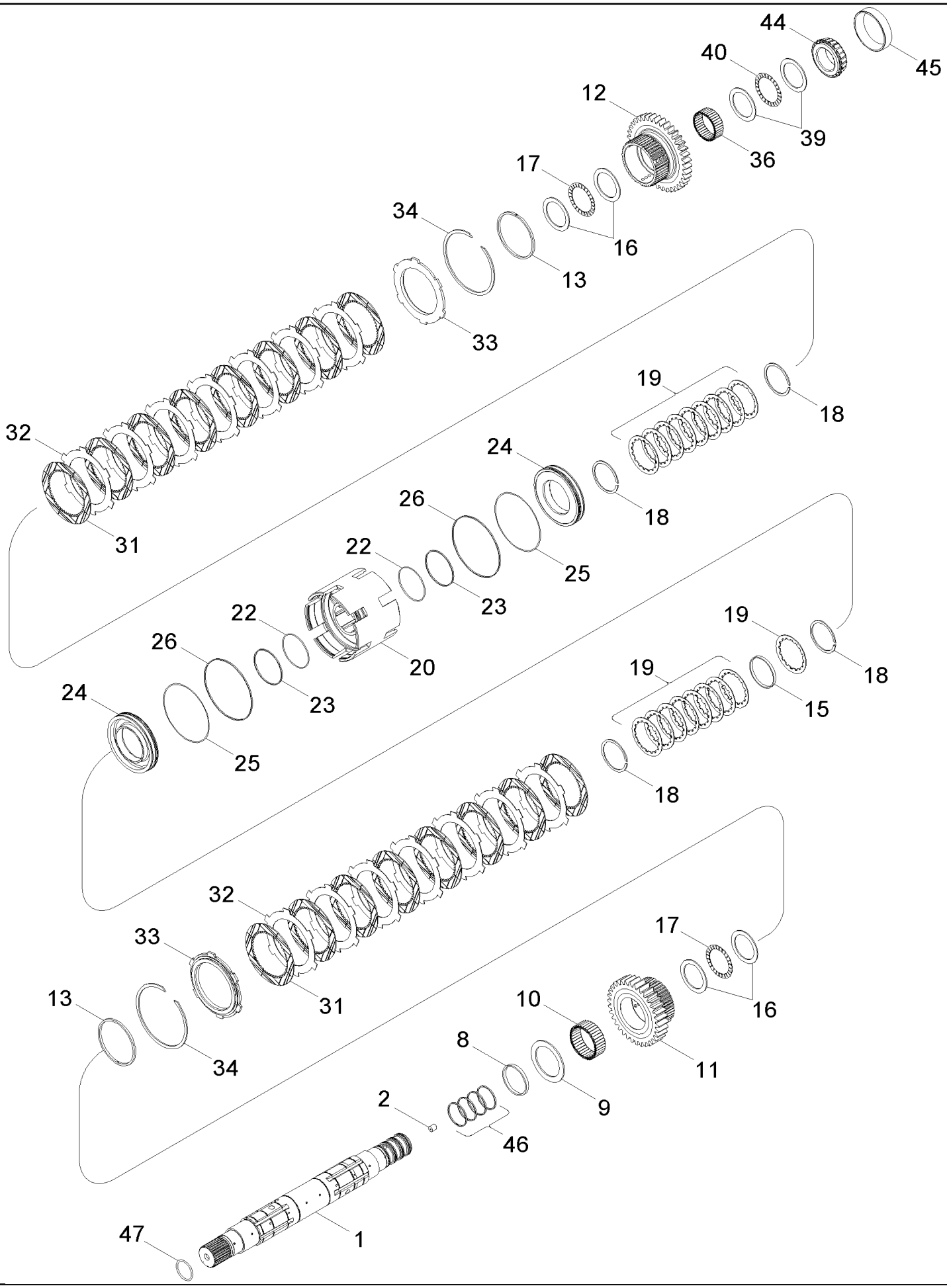

MX285 CASE IH MAGNUM TRACTOR (NORTH AMERICA)

06-12A SPEED TRANSMISSION - OUTPUT SHAFT FRONT CLUTCH, ASN AJB0361241

ссылка	Номер детали	Кол-во	Описание
1	87328867	1	SHAFT, Inc. 2
2	187516A1	3	PLUG, 12 mm
8	1286040C2	1	RING,
9	1997888C1	1	WASHER, THRUST,
10	1286016C1	1	BEARING, NEEDLE,
11	1285985C1	1	GEAR, WHEEL, 34T
12	1285987C1	1	PINION, 39T
13	1286052C1	2	RING,
15	87434656	1	RING, Lube
16	1286043C1	4	WASHER, THRUST,
17	572182R1	2	BEARING, THRUST,
18	101-11250	4	RING, SNAP, #250, 2.356, Ext,
19	87425389	18	SPRING, BELLEVILLE,
20	86987594	1	CARRIER,
22	1286081C1	2	O-RING,
23	1286076C1	2	RING,
24	86987597	2	PISTON,
25	1286083C1	2	O-RING,
26	1286079C1	2	RING,
31	86990276	16	DISC, Friction
32	92934C2	16	DISC, Separator
33	1342645C3	2	DISC, CLUTCH,
34	1285996C1	2	RING, SNAP,
36	80907C1	1	BEARING, NEEDLE,
39	1286042C1	2	WASHER, THRUST,
40	87012543	1	BEARING, THRUST,
44	219530H1	1	BEARING, CONE,
45	614052	1	CUP,
46	1286024C1	4	RING,
47	238-5223	1	O-RING, -223, 70 Duro, 1.609" ID x .139" Thk,

06-13 SPEED TRANSMISSION - OUTPUT SHAFT REAR CLUTCH, BSN AJB0361241

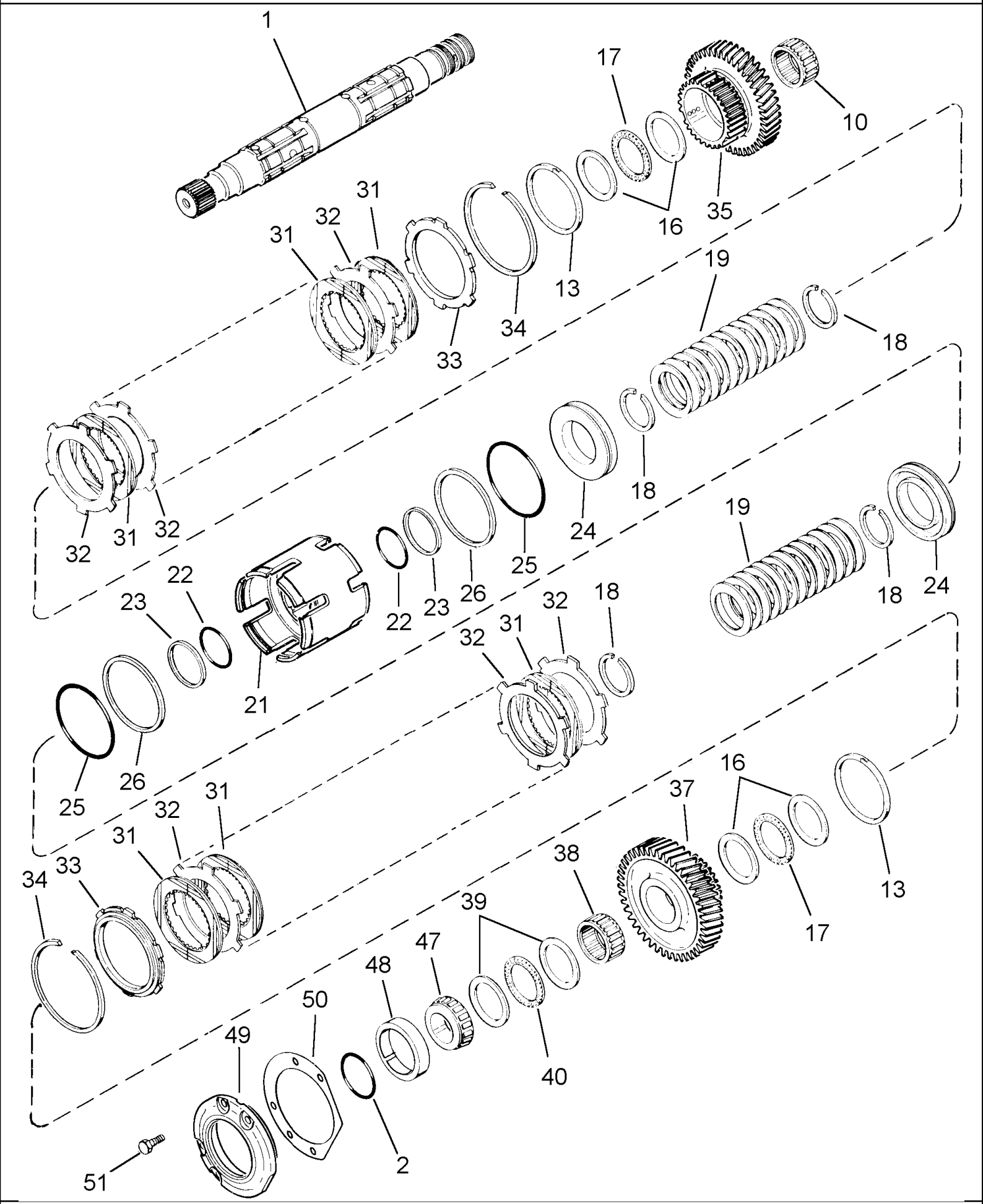

MX285 CASE IH MAGNUM TRACTOR (NORTH AMERICA)

06-13 SPEED TRANSMISSION - OUTPUT SHAFT REAR CLUTCH, BSN AJB0361241

ссылка	Номер детали	Кол-во	Описание
1	230135A2	1	SHAFT, , See Figure 06-12
2	238-5223	1	O-RING, -223, 70 Duro, 1.609" ID x .139" Thk,
10	1286016C1	1	BEARING, NEEDLE,
13	1286052C1	2	RING,
16	1286043C1	4	WASHER, THRUST,
17	572182R1	2	BEARING, THRUST,
18	93350C1	4	RING,
19	1286012C2	26	WASHER,
21	86987593	1	CARRIER,
22	1286081C1	2	O-RING,
23	1286076C1	2	RING,
24	86987597	2	PISTON,
25	1286083C1	2	O-RING,
26	1286079C1	2	RING,
31	86990276	20	DISC, Friction
32	92934C2	20	DISC, Separator
33	1342645C3	2	DISC, CLUTCH,
34	1285996C1	2	RING, SNAP,
35	86987609	1	PINION, 39T
37	1285982C1	1	PINION, 44T
38	1285997C1	1	BEARING, NEEDLE,
39	1286042C1	2	WASHER, THRUST,
40	K620185	1	BEARING, THRUST,
47	1286021C1	1	BEARING, ROLLER,
48	29214H	1	BEARING, CUP, 4-5/16 OD
49	1286001C4	1	CAGE,
50	1286061C1	2	SHIM, 0,08 mm
50	1286062C1	2	SHIM, 0,10 mm
50	1286063C1	2	SHIM, 0,13 mm
50	1286064C1	2	SHIM, 0,30 mm
50	1286065C1	2	SHIM, 0,76 mm
51	613-10030	6	BOLT, Hex, M10 x 30, 8.8, Full Thd, M10 x 30

MX285 CASE IH MAGNUM TRACTOR (NORTH AMERICA)

06-13A SPEED TRANSMISSION - OUTPUT SHAFT REAR CLUTCH, ASN AJB0361241

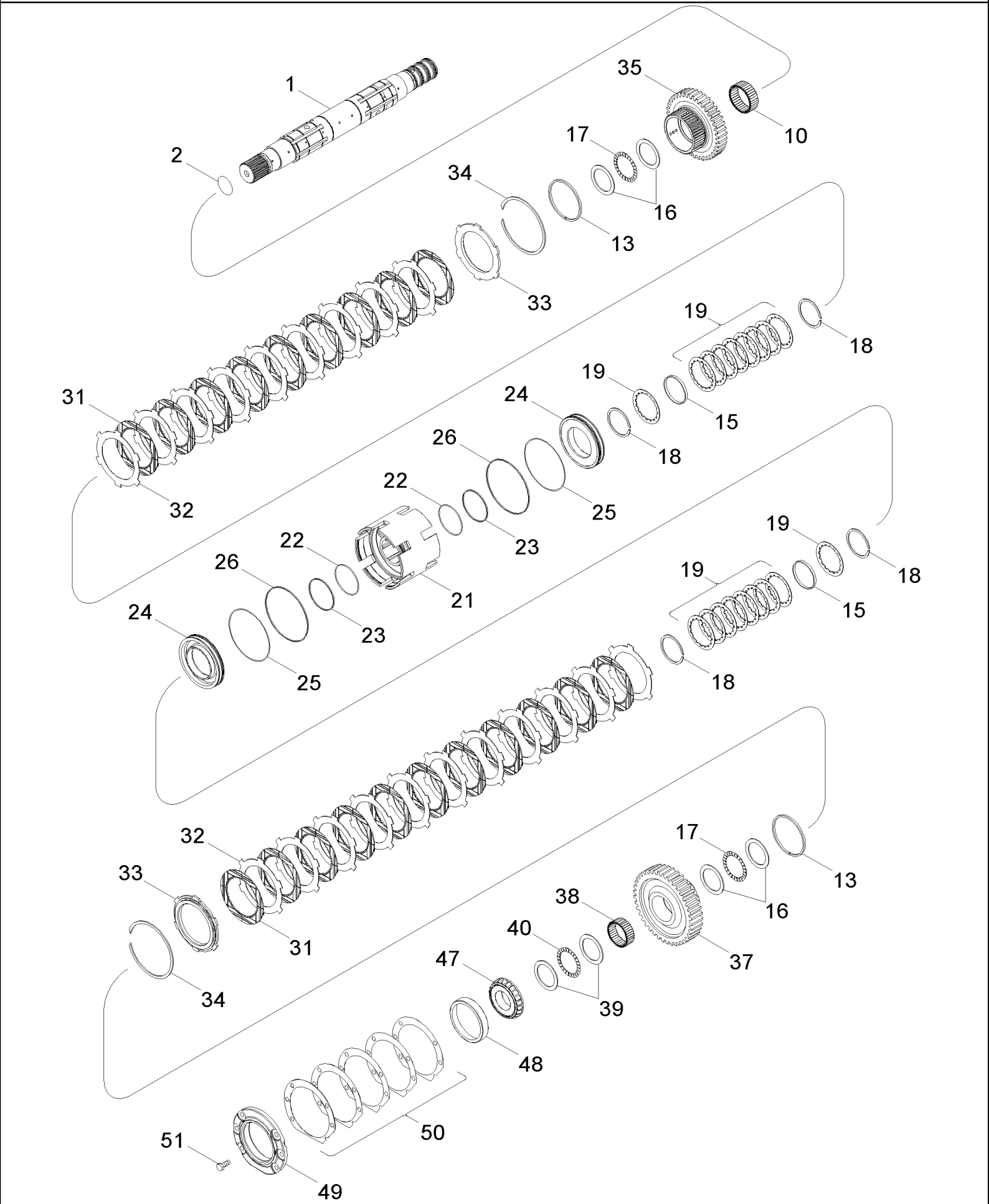

MX285 CASE IH MAGNUM TRACTOR (NORTH AMERICA)

06-13A SPEED TRANSMISSION - OUTPUT SHAFT REAR CLUTCH, ASN AJB0361241

ссылка	Номер детали	Кол-во	Описание
1	87328867	1	SHAFT, , See Figure 06-10
2	238-5223	1	O-RING, -223, 70 Duro, 1.609" ID x .139" Thk,
10	1286016C1	1	BEARING, NEEDLE,
13	1286052C1	2	RING,
15	87434656	2	RING, Lube
16	1286043C1	4	WASHER, THRUST,
17	572182R1	2	BEARING, THRUST,
18	101-11250	4	RING, SNAP, #250, 2.356, Ext,
19	87425389	18	SPRING, BELLEVILLE,
21	86987593	1	CARRIER,
22	1286081C1	2	O-RING,
23	1286076C1	2	RING,
24	86987597	2	PISTON,
25	1286083C1	2	O-RING,
26	1286079C1	2	RING,
31	86990276	20	DISC, Friction
32	92934C2	20	DISC, Separator
33	1342645C3	2	DISC, CLUTCH,
34	1285996C1	2	RING, SNAP,
35	86987609	1	PINION, 39T
37	1285982C1	1	PINION, 44T
38	1285997C1	1	BEARING, NEEDLE,
39	1286042C1	2	WASHER, THRUST,
40	87012543	1	BEARING, THRUST,
47	1286021C1	1	BEARING, ROLLER,
48	29214H	1	BEARING, CUP, 4-5/16 OD
49	1286001C4	1	CAGE,
50	1286061C1	2	SHIM, 0,08 mm
50	1286062C1	2	SHIM, 0,10 mm
50	1286063C1	2	SHIM, 0,13 mm
50	1286064C1	2	SHIM, 0,30 mm
50	1286065C1	2	SHIM, 0,76 mm
51	613-10025	6	BOLT, Hex, M10 x 25, 8.8, Full Thd,

MX285 CASE IH MAGNUM TRACTOR (NORTH AMERICA)

06-14 RANGE TRANSMISSION - HOUSING, BSN AJB0355338

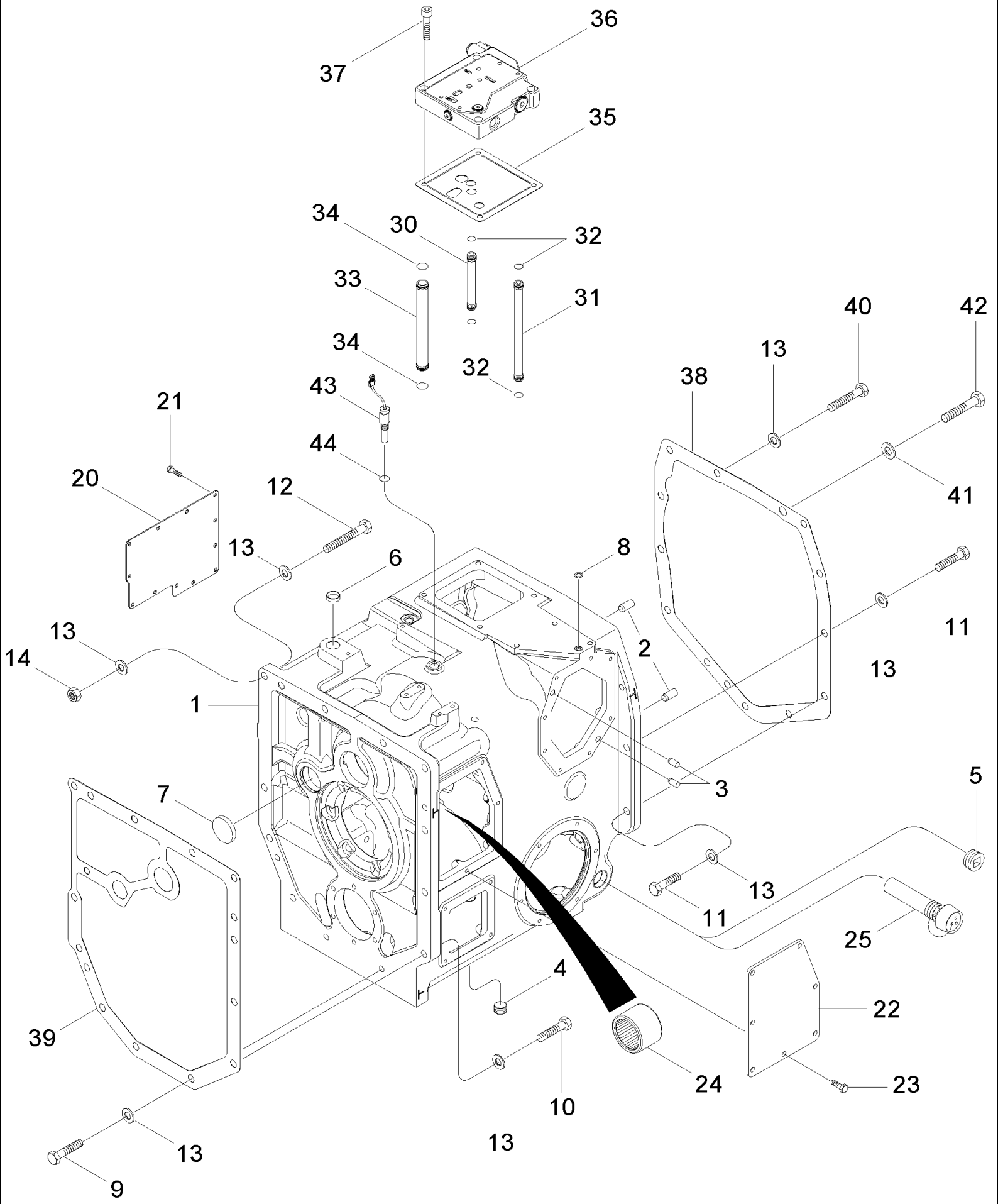

MX285 CASE IH MAGNUM TRACTOR (NORTH AMERICA)

06-14 RANGE TRANSMISSION - HOUSING, BSN AJB0355338

ссылка	Номер детали	Кол-во	Описание
1	396069A4	1	HOUSING ASSY., Inc. 2 - 8
2	837-16035	4	DOWEL, M16 x 35, 16 x 35 mm
3	837-12025	2	DOWEL, M12 x 25, 12 x 25 mm
4	192792A1	1	PLUG, 3/4 in
5	327080A1	1	PLUG, 1-1/4
6	41-1018	1	PLUG, Cup, 1 1/8", 1-1/8
7	41-1038	1	PLUG, Cup, 2 3/8", 2-3/8
8	238-6112	1	O-RING, -112, 90 Duro, .487" ID x .103" Thk,
9	828-16085	2	SCREW, Hex, M16 x 85, 10.9, M16 x 85; 10.9
10	828-16060	2	BOLT, Hex, M16 x 60, 10.9, Full Thd, Hex, M16 x 60, 10.9, Full Thd
11	828-16060	17	BOLT, Hex, M16 x 60, 10.9, Full Thd, Hex, M16 x 60, 10.9, Full Thd
12	828-16110	1	BOLT, Hex, M16 x 110, 10.9, M16 x 110; 10.9
13	896-12016	24	WASHER, M17.5 x 30 x 4, HT, 17,5 x 30 x 4 mm
14	829-1316	1	NUT, M16, Cl 10, M16; 10
20	93364C1	1	COVER,
21	628-10025	12	SCREW, Hex, M10 x 25, 10.9, Full Thd, M10 x 25; 10.9
22	225209A1	1	COVER,
23	628-10025	7	SCREW, Hex, M10 x 25, 10.9, Full Thd, M10 x 25; 10.9
24	301533R1	1	BEARING,
25	536850R1	1	HEATER, 120 Volt
30	235976A2	1	TUBE,
31	256544A1	3	TUBE,
32	238-5014	8	O-RING, -014, 70 Duro, .489" ID x .070" Thk,
33	300828A1	1	TUBE,
34	238-5019	2	O-RING, -019, 70 Duro, .801" ID x .070" Thk,
35	253385A2	1	GASKET,
36	445537A2	1	VALVE, Inching, See Figure 06-17
37	861-10045	4	SCREW, Hex Soc Hd, M10 x 45, 12.9, M10 x 45; 12.9
38	87390949	1	GASKET,
39	92821C2	1	GASKET,
40	828-16080	1	BOLT, Hex, M16 x 80, 10.9, Hex, M16 x 80, 10.9
41	896-12020	1	WASHER, M20 x 37.5 x 4, HT, 22 x 37 x 4 mm
42	828-20090	1	BOLT, Hex, M20 x 90, 10.9, M20 x 90; 10.9
43	87422106	1	SENSOR, Speed
44	238-5115	1	O-RING, -115, 70 Duro, .674" ID x .103" Thk,

MX285 CASE IH MAGNUM TRACTOR (NORTH AMERICA)

06-15 RANGE TRANSMISSION - HOUSING, BTW AJB0355338 & AJB0355923

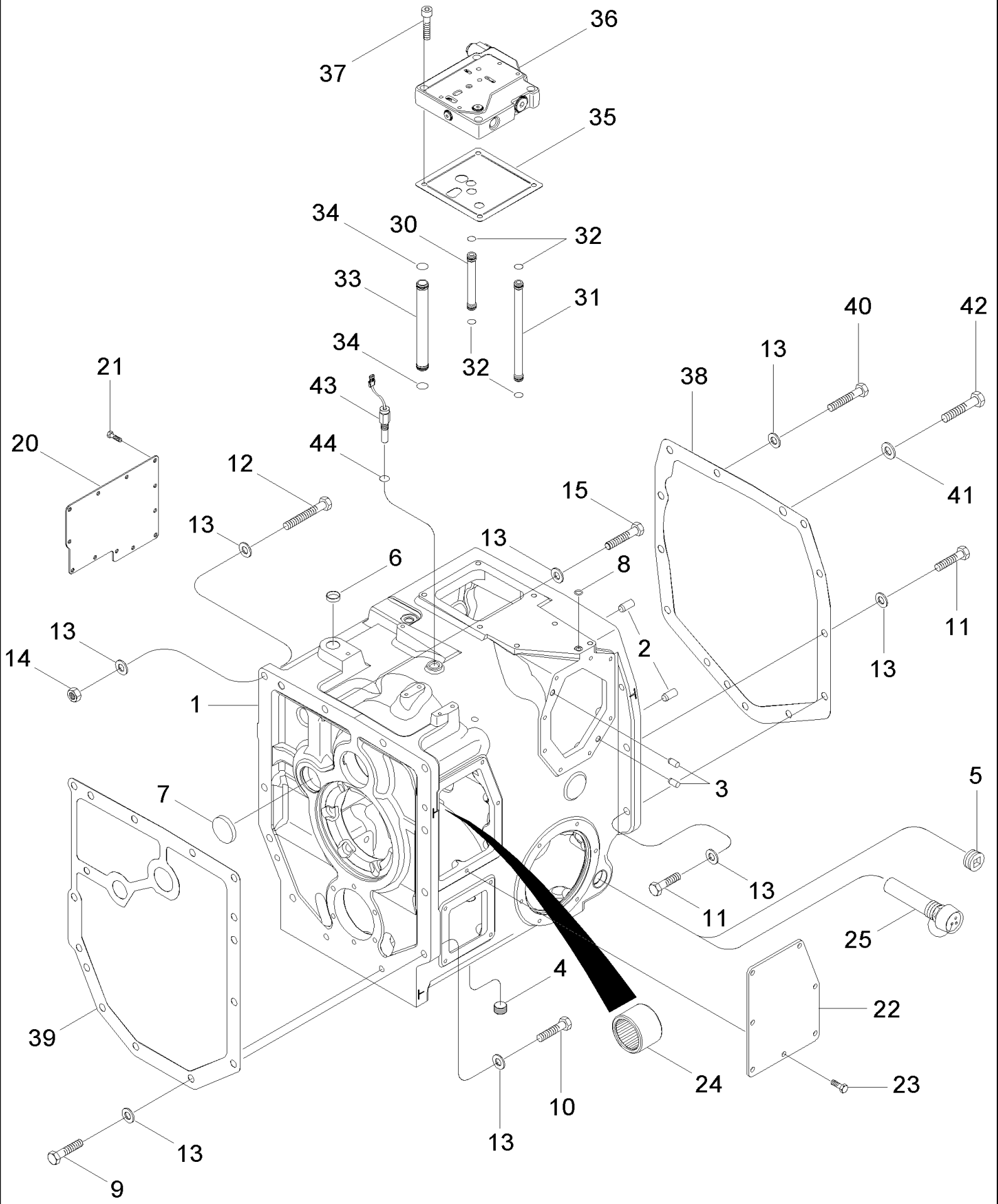

MX285 CASE IH MAGNUM TRACTOR (NORTH AMERICA)

06-15 RANGE TRANSMISSION - HOUSING, BTW AJB0355338 & AJB0355923

ссылка	Номер детали	Кол-во	Описание
1	87445830	1	HOUSING ASSY., Inc. 2 - 8
2	837-16035	4	DOWEL, M16 x 35, 16 x 35 mm
3	837-12025	2	DOWEL, M12 x 25, 12 x 25 mm
4	192792A1	1	PLUG, 3/4 in
5	327080A1	1	PLUG, 1-1/4
6	41-1018	1	PLUG, Cup, 1 1/8", 1-1/8
7	41-1038	1	PLUG, Cup, 2 3/8", 2-3/8
8	238-6112	1	O-RING, -112, 90 Duro, .487" ID x .103" Thk,
9	828-16085	2	SCREW, Hex, M16 x 85, 10.9, M16 x 85; 10.9
10	828-16060	6	BOLT, Hex, M16 x 60, 10.9, Full Thd, Hex, M16 x 60, 10.9, Full Thd
11	828-16060	9	BOLT, Hex, M16 x 60, 10.9, Full Thd, Hex, M16 x 60, 10.9, Full Thd
12	828-16120	1	BOLT, Hex, M16 x 120, 10.9, M16 x 120; 10.9
13	896-12016	24	WASHER, M17.5 x 30 x 4, HT, 17,5 x 30 x 4 mm
14	829-1316	1	NUT, M16, Cl 10, M16; 10
15	828-16070	3	BOLT, Hex, M16 x 70, 10.9, Hex, M16 x 70, 10.9
20	93364C1	1	COVER,
21	628-10025	12	SCREW, Hex, M10 x 25, 10.9, Full Thd, M10 x 25; 10.9
22	225209A1	1	COVER,
23	628-10025	7	SCREW, Hex, M10 x 25, 10.9, Full Thd, M10 x 25; 10.9
24	301533R1	1	BEARING,
25	536850R1	1	HEATER, 120 Volt
30	235976A2	1	TUBE,
31	256544A1	3	TUBE,
32	238-5014	8	O-RING, -014, 70 Duro, .489" ID x .070" Thk,
33	300828A1	1	TUBE,
34	238-5019	2	O-RING, -019, 70 Duro, .801" ID x .070" Thk,
35	253385A2	1	GASKET,
36	445537A2	1	VALVE, Inching, See Figure 06-17
37	861-10045	4	SCREW, Hex Soc Hd, M10 x 45, 12.9, M10 x 45; 12.9
38	87390949	1	GASKET,
39	92821C2	1	GASKET,
40	828-16080	1	BOLT, Hex, M16 x 80, 10.9, Hex, M16 x 80, 10.9
41	896-12020	1	WASHER, M20 x 37.5 x 4, HT, 22 x 37 x 4 mm
42	828-20090	1	BOLT, Hex, M20 x 90, 10.9, M20 x 90; 10.9
43	87422106	1	SENSOR, Speed
44	238-5115	1	O-RING, -115, 70 Duro, .674" ID x .103" Thk,

MX285 CASE IH MAGNUM TRACTOR (NORTH AMERICA)

06-16 RANGE TRANSMISSION - HOUSING, ASN AJB0355923

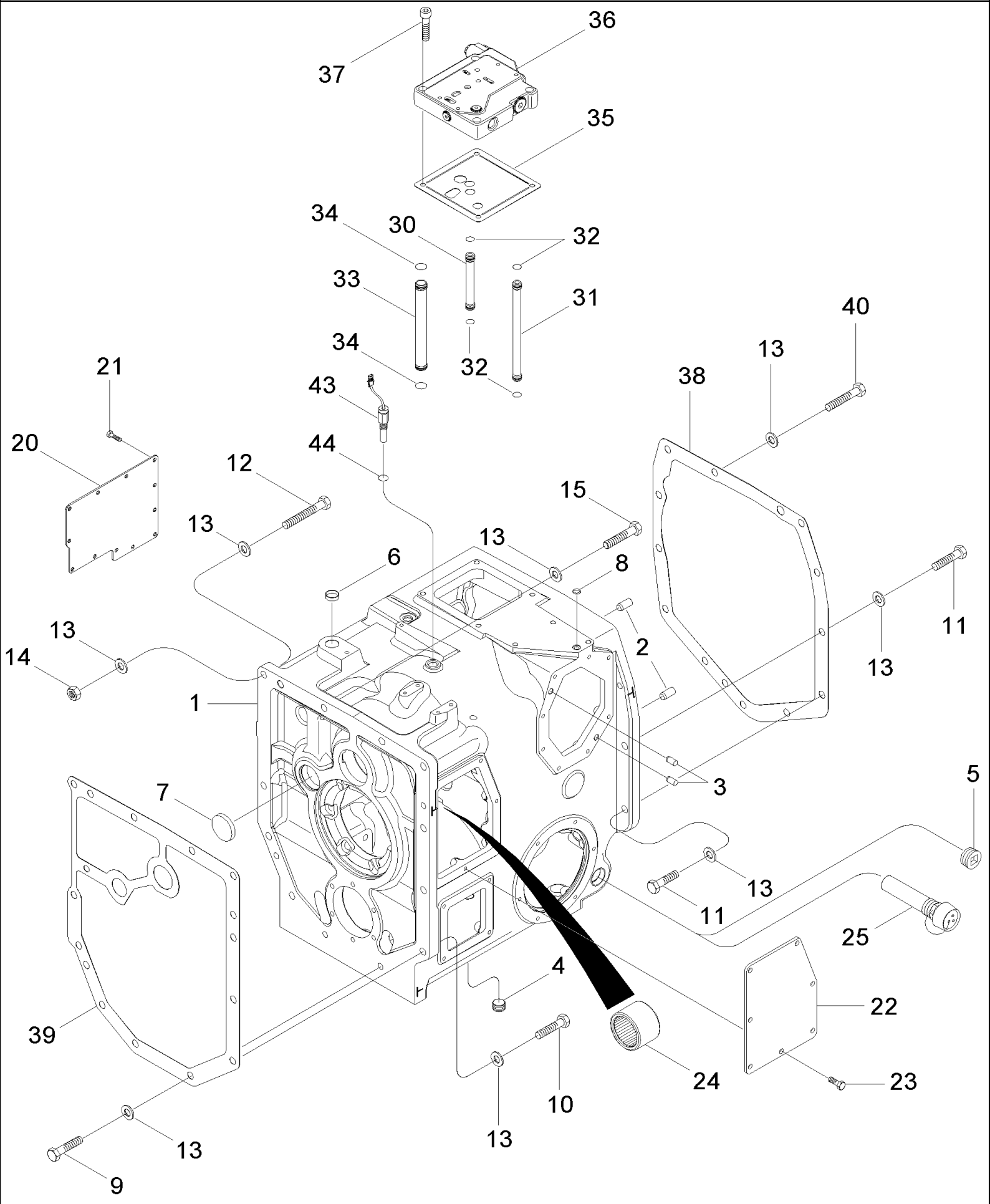

MX285 CASE IH MAGNUM TRACTOR (NORTH AMERICA)

06-16 RANGE TRANSMISSION - HOUSING, ASN AJB0355923

ссылка	Номер детали	Кол-во	Описание
1	87432474	1	HOUSING ASSY., Inc. 2 - 8
2	837-16035	4	DOWEL, M16 x 35, 16 x 35 mm
3	837-12025	2	DOWEL, M12 x 25, 12 x 25 mm
4	192792A1	1	PLUG, 3/4 in
5	327080A1	1	PLUG, 1-1/4
6	41-1018	1	PLUG, Cup, 1 1/8", 1-1/8
7	41-1038	1	PLUG, Cup, 2 3/8", 2-3/8
8	238-6112	1	O-RING, -112, 90 Duro, .487" ID x .103" Thk,
9	828-16085	2	SCREW, Hex, M16 x 85, 10.9, M16 x 85; 10.9
10	828-16060	6	BOLT, Hex, M16 x 60, 10.9, Full Thd, Hex, M16 x 60, 10.9, Full Thd
11	828-16060	9	BOLT, Hex, M16 x 60, 10.9, Full Thd, Hex, M16 x 60, 10.9, Full Thd
12	828-16120	1	BOLT, Hex, M16 x 120, 10.9, M16 x 120; 10.9
13	896-12016	24	WASHER, M17.5 x 30 x 4, HT, 17,5 x 30 x 4 mm
14	829-1316	1	NUT, M16, Cl 10, M16; 10
15	828-16070	3	BOLT, Hex, M16 x 70, 10.9, Hex, M16 x 70, 10.9
20	93364C1	1	COVER,
21	628-10025	12	SCREW, Hex, M10 x 25, 10.9, Full Thd, M10 x 25; 10.9
22	225209A1	1	COVER,
23	628-10025	7	SCREW, Hex, M10 x 25, 10.9, Full Thd, M10 x 25; 10.9
24	301533R1	1	BEARING,
25	536850R1	1	HEATER, 120 Volt
30	235976A2	1	TUBE,
31	256544A1	3	TUBE,
32	238-5014	8	O-RING, -014, 70 Duro, .489" ID x .070" Thk,
33	300828A1	1	TUBE,
34	238-5019	2	O-RING, -019, 70 Duro, .801" ID x .070" Thk,
35	253385A2	1	GASKET,
36	445537A2	1	VALVE, Inching, See Figure 06-17
37	861-10045	4	SCREW, Hex Soc Hd, M10 x 45, 12.9, M10 x 45; 12.9
38	87390949	1	GASKET,
39	92821C2	1	GASKET,
40	828-16090	4	BOLT, Hex, M16 x 90, 10.9, M16 x 90; 10.9
43	87422106	1	SENSOR, Speed
44	238-5115	1	O-RING, -115, 70 Duro, .674" ID x .103" Thk,

06-17 VALVE ASSY - INCHING

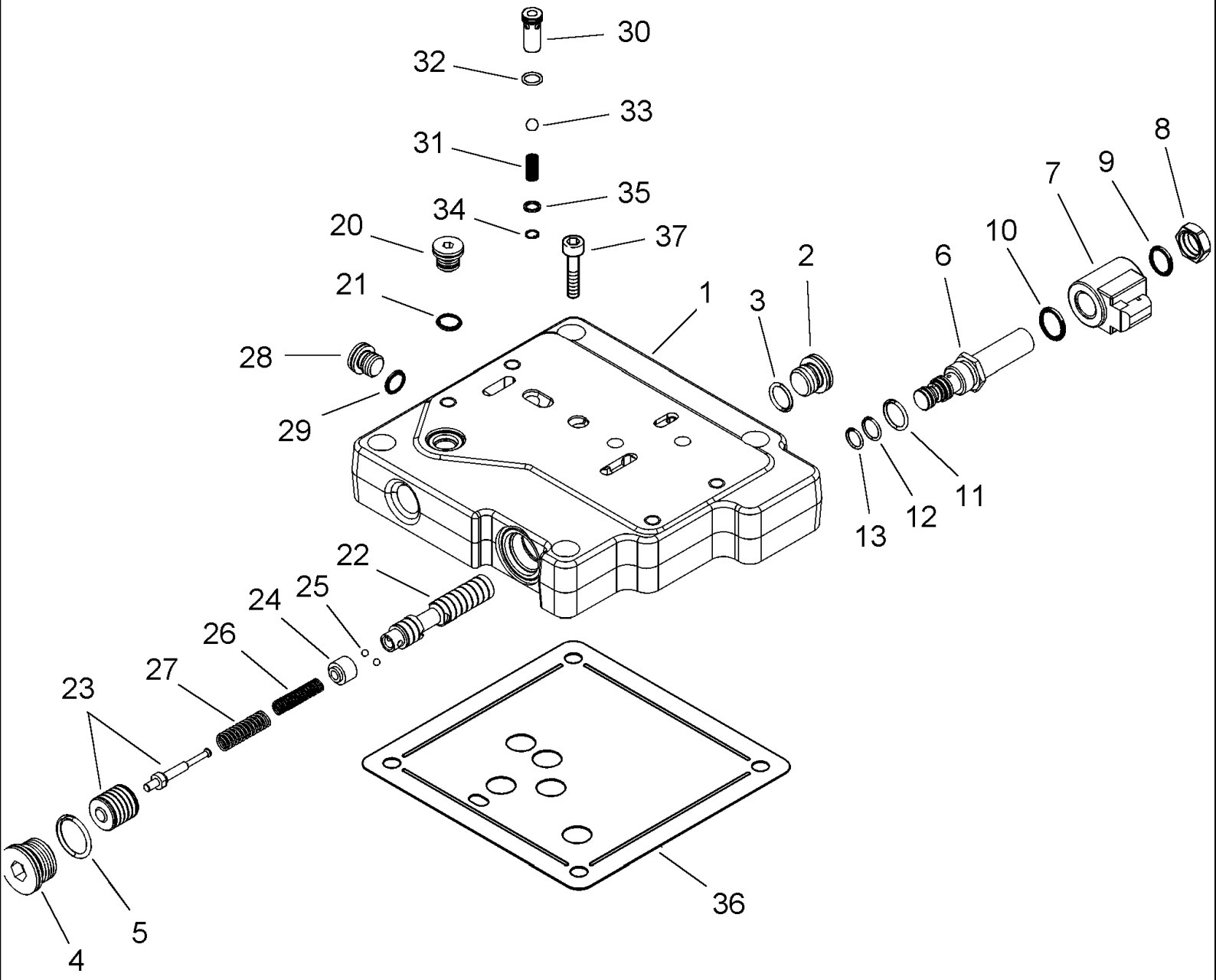

MX285 CASE IH MAGNUM TRACTOR (NORTH AMERICA)

06-17 VALVE ASSY - INCHING

ссылка	Номер детали	Кол-во	Описание
	445537A2	1	VALVE, Inc. 1 - 35
1	NSS	1	NOT SERVICED SEPARATELY, Body, Valve
2	221578A1	1	PLUG, Hex Soc, M18 x 1.5, ORB, Inc. 3
3	637-63153	1	O-RING, Cl 6, 15.3MM ID x 2.2 Thk, 15,3 ID x 2,2
4	221580A1	1	PLUG, Hex Soc, M27 x 2, ORB, Inc. 5
5	637-64236	1	O-RING, Cl 6, 23.6MM ID x 2.9 Thk, 23,6 ID x 2,9
	239552A2	1	VALVE, Solenoid, Inc. 6 - 13
6	NSS	1	NOT SERVICED SEPARATELY, Cartridge
7	NSS	1	NOT SERVICED SEPARATELY, Coil
8	NSS	1	NOT SERVICED SEPARATELY, Nut
	308245A1	1	KIT, SEALS, Inc. 9 - 13
9	238-7016	1	O-RING, -016, Cl 7, .614" ID x .070" Thk,
10	238-7018	1	O-RING, -018, Cl 7, .739" ID x .070" Thk,
11	237-6008	1	O-RING, 8-1, 90 Duro, .644" ID x .087" Thk,
12	238-5014	1	O-RING, -014, 70 Duro, .489" ID x .070" Thk,
13	238-5013	1	O-RING, -013, 70 Duro, .426" ID x .070" Thk,
20	221576A1	1	PLUG, Hex Soc, M14 x 1.5, ORB, M14 Or, Inc. 21
21	637-63113	1	O-RING, Cl 6, 11.3MM ID x 2.2 Thk, 11,3 ID x 2,2
	302170A2	1	SPOOL, Inc. 22 - 27
22	NSS	1	NOT SERVICED SEPARATELY, Spool
23	NSS	1	NOT SERVICED SEPARATELY, Piston
24	NSS	1	NOT SERVICED SEPARATELY, Sleeve
25	NSS	1	NOT SERVICED SEPARATELY, Ball
26	NSS	1	NOT SERVICED SEPARATELY, Spring
27	NSS	1	NOT SERVICED SEPARATELY, Spring
28	221576A1	1	PLUG, Hex Soc, M14 x 1.5, ORB, M14 Or, Inc. 29
29	637-63113	1	O-RING, Cl 6, 11.3MM ID x 2.2 Thk, 11,3 ID x 2,2
	445492A2	1	VALVE, CHECK, Check, Inc. 30 - 35
30	NSS	1	NOT SERVICED SEPARATELY, Body
31	445494A1	1	SPRING, VALVE,
32	238-5012	1	O-RING, -012, 70 Duro, .364" ID x .070" Thk,
33	211-1009	1	BALL, 9/32; 24,CRS
34	100-2131	1	RING, SNAP, 0.312", Int, #31,
35	86988656	1	WASHER, SPRING,
36	253385A2	1	GASKET,
37	861-10045	4	SCREW, Hex Soc Hd, M10 x 45, 12.9, M10 x 45; 12.9

MX285 CASE IH MAGNUM TRACTOR (NORTH AMERICA)

06-18 RANGE TRANSMISSION - INPUT SHAFT, BSN AJB0361241

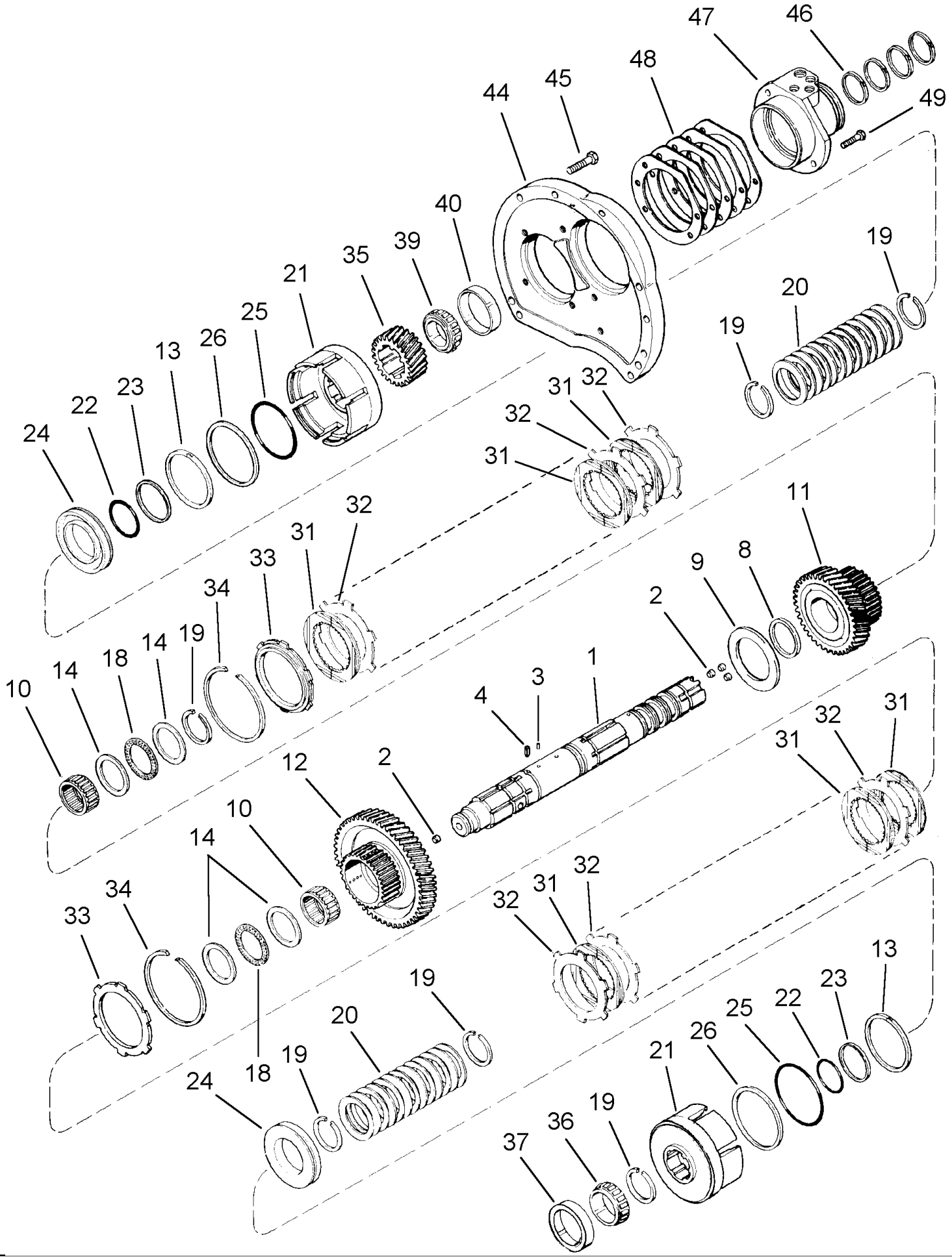

MX285 CASE IH MAGNUM TRACTOR (NORTH AMERICA)

06-18 RANGE TRANSMISSION - INPUT SHAFT, BSN AJB0361241

ссылка	Номер детали	Кол-во	Описание
1	1997446C2	1	SHAFT ASSY., Inc. 2 - 4
2	187516A1	4	PLUG,
3	38-3605	5	PIN, 3/32" x 5/16", Coiled, 3/32" x 5/16", Coiled
4	1963874C1	1	PIN, 5/16 x 14 mm
8	1286040C2	1	RING,
9	1997888C1	1	WASHER, THRUST,
10	80909C1	2	BEARING, NEEDLE,
11	86987610	1	PINION, 37T
12	86987612	1	PINION, 59T
13	1286052C1	2	RING,
14	1286043C1	4	WASHER, THRUST,
18	572182R1	2	BEARING, THRUST,
19	93350C1	6	RING,
20	1286012C2	26	WASHER,
21	86987596	2	CARRIER,
22	1286081C1	2	O-RING,
23	1286076C1	2	RING,
24	86987597	2	PISTON,
25	1286083C1	2	O-RING,
26	1286079C1	2	RING,
31	86990276	22	DISC, Friction
32	92934C2	22	DISC, Separator
33	1342645C3	2	DISC, CLUTCH,
34	1285996C1	2	RING, SNAP,
35	1285971C1	1	PINION,
36	A75211	1	BEARING, CONE,
37	A75210	1	BEARING, CUP,
39	ST2063	1	BEARING, CONE,
40	54404R1	1	BEARING, CUP,
44	281696A1	1	SUPPORT,
45	814-12050	6	BOLT, Hex, M12 x 50, 8.8,
46	1286025C1	4	RING,
47	254337A2	1	CAGE,
48	1286061C1	2	SHIM, 0,08 mm
48	1286062C1	2	SHIM, 0,10 mm
48	1286063C1	2	SHIM, 0,13 mm
48	1286064C1	2	SHIM, 0,30 mm
48	1286065C1	2	SHIM, 0,76 mm
49	613-10030	3	BOLT, Hex, M10 x 30, 8.8, Full Thd, M10 x 30

MX285 CASE IH MAGNUM TRACTOR (NORTH AMERICA)

06-18A RANGE TRANSMISSION - INPUT SHAFT, ASN AJB0361241

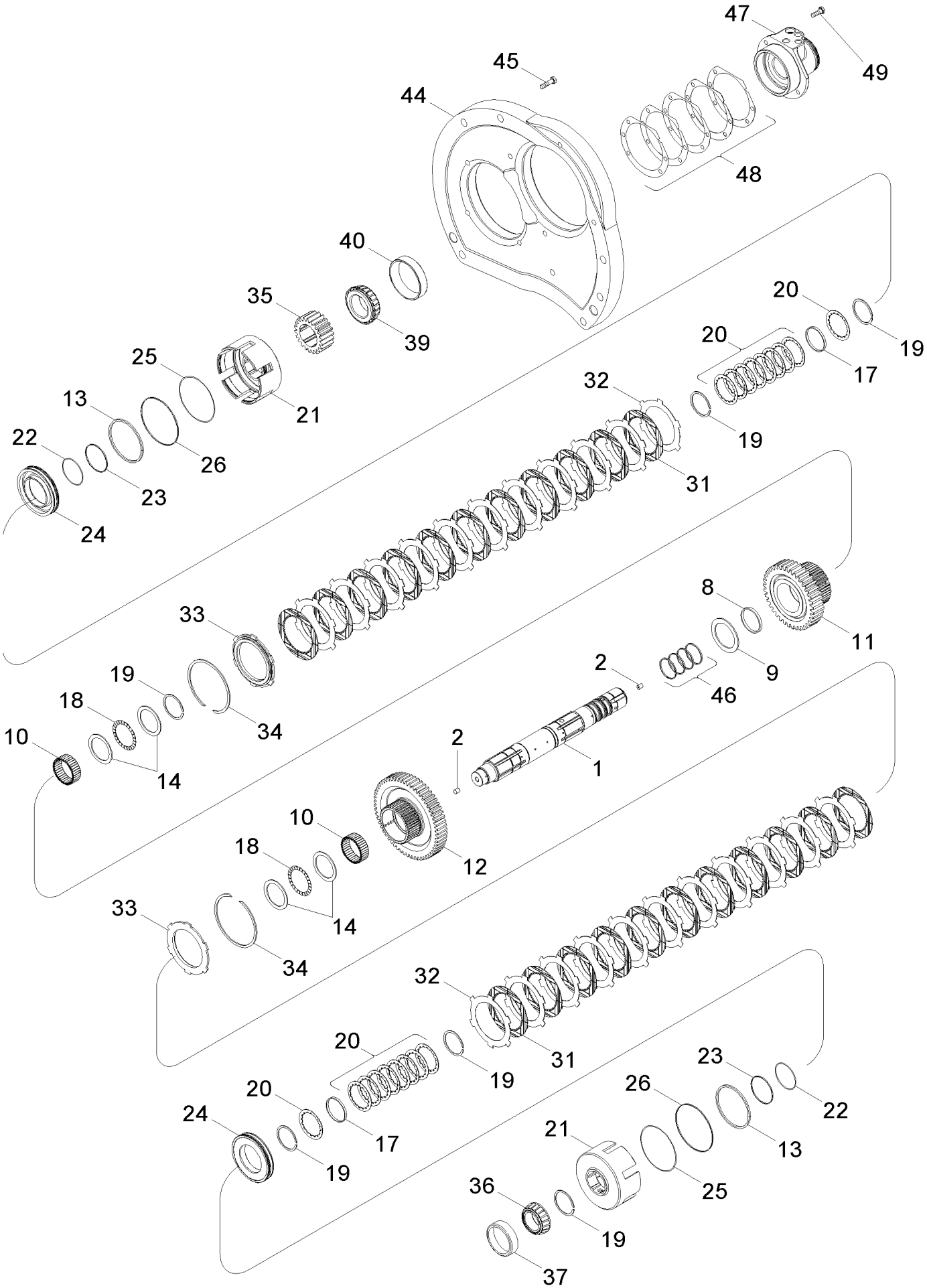

MX285 CASE IH MAGNUM TRACTOR (NORTH AMERICA)

06-18A RANGE TRANSMISSION - INPUT SHAFT, ASN AJB0361241

ссылка	Номер детали	Кол-во	Описание
1	87434653	1	SHAFT ASSY., Inc. 2
2	187516A1	4	PLUG,
8	1286040C2	1	RING,
9	1997888C1	1	WASHER, THRUST,
10	80909C1	2	BEARING, NEEDLE,
11	86987610	1	PINION, 37T
12	86987612	1	PINION, 59T
13	1286052C1	2	RING,
14	1286043C1	4	WASHER, THRUST,
17	87434656	2	RING, Lube
18	572182R1	2	BEARING, THRUST,
19	101-11250	6	RING, SNAP, #250, 2.356, Ext,
20	87425389	18	SPRING, BELLEVILLE,
21	86987596	2	CARRIER,
22	1286081C1	2	O-RING,
23	1286076C1	2	RING,
24	86987597	2	PISTON,
25	1286083C1	2	O-RING,
26	1286079C1	2	RING,
31	86990276	22	DISC, Friction
32	92934C2	22	DISC, Separator
33	1342645C3	2	DISC, CLUTCH,
34	1285996C1	2	RING, SNAP,
35	1285971C1	1	PINION,
36	A75211	1	BEARING, CONE,
37	A75210	1	BEARING, CUP,
39	ST2063	1	BEARING, CONE,
40	54404R1	1	BEARING, CUP,
44	281696A1	1	SUPPORT,
45	87015540	6	BOLT, Hex, M12 x 50, 10.9,
46	1286025C1	4	RING,
47	254337A2	1	CAGE,
48	1286061C1	2	SHIM, 0,08 mm
48	1286062C1	2	SHIM, 0,10 mm
48	1286063C1	2	SHIM, 0,13 mm
48	1286064C1	2	SHIM, 0,30 mm
48	1286065C1	2	SHIM, 0,76 mm
49	613-10030	3	BOLT, Hex, M10 x 30, 8.8, Full Thd,

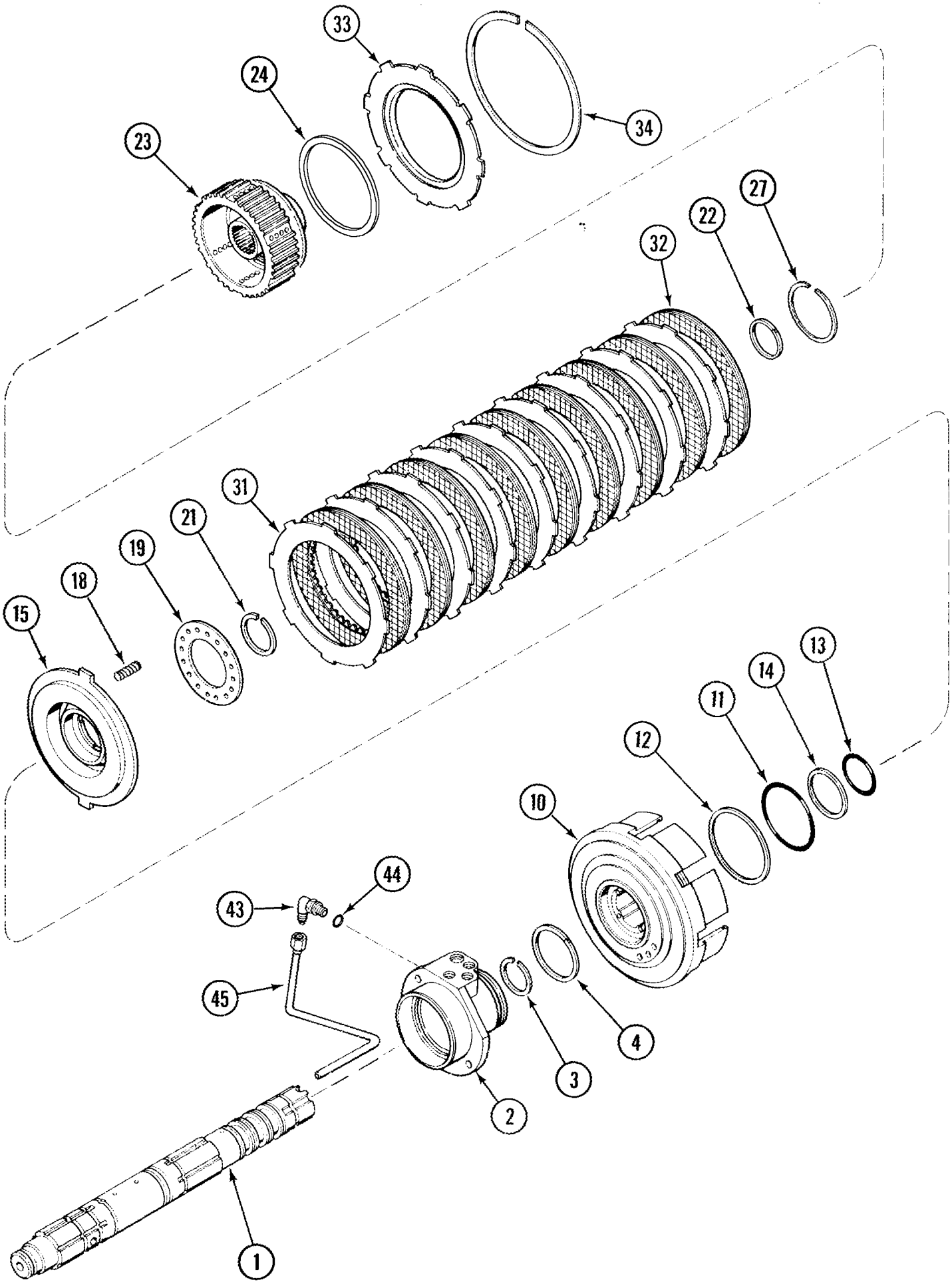
33
24
34
23
27
22
32
31
21
19
18
15
13
14
11
12
10
44
43
45
4
3
2
1

MX285 CASE IH MAGNUM TRACTOR (NORTH AMERICA)

06-19 RANGE TRANSMISSION - MASTER CLUTCH

ссылка	Номер детали	Кол-во	Описание
1	1997446C2	1	SHAFT ASSY., , See Figure 06-18, BSN AJB0361241
1	87434653	1	SHAFT ASSY., , See Figure 06-18A, ASN AJB0361241
2	254337A2	1	CAGE,
3	101-11225	1	RING, SNAP, #225, Ext, No. 225
4	1286027C2	1	RING,
10	243091A1	1	CARRIER,
11	93138C1	1	O-RING,
12	92562C1	1	RING,
13	93137C1	1	O-RING,
14	92561C1	1	RING,
15	112299A2	1	PISTON ASSY,
18	93136C2	16	SPRING,
19	112329A2	1	RETAINER, , BSN AJB0303751
19	112329A3	1	RETAINER, , ASN AJB0303751
21	100-11306	1	RING, SNAP, #306, Ext,
22	92555C1	1	RING,
23	235913A2	1	HUB, , BSN AJB0303751
23	235913A3	1	HUB, , ASN AJB0303751
24	235987A1	1	RING,
27	100-11200	1	RING, SNAP, #200, Ext,
31	1285974C1	9	PLATE, CLUTCH, DRIVING, Separator
32	1285975C2	9	DISC, CLUTCH, Friction
33	235851A2	1	DISC, Backing
34	1963876C1	1	RING, SNAP,
43	218-5105	1	ELBOW, 90є, 9/16"-18, 37є x 9/16"-18, O-Ring, 9/16 fl x Or, Inc. 44
45	1963935C2	1	TUBE,
44	237-6006	1	O-RING, 6-1, 90 Duro, .468" ID x .078" Thk,

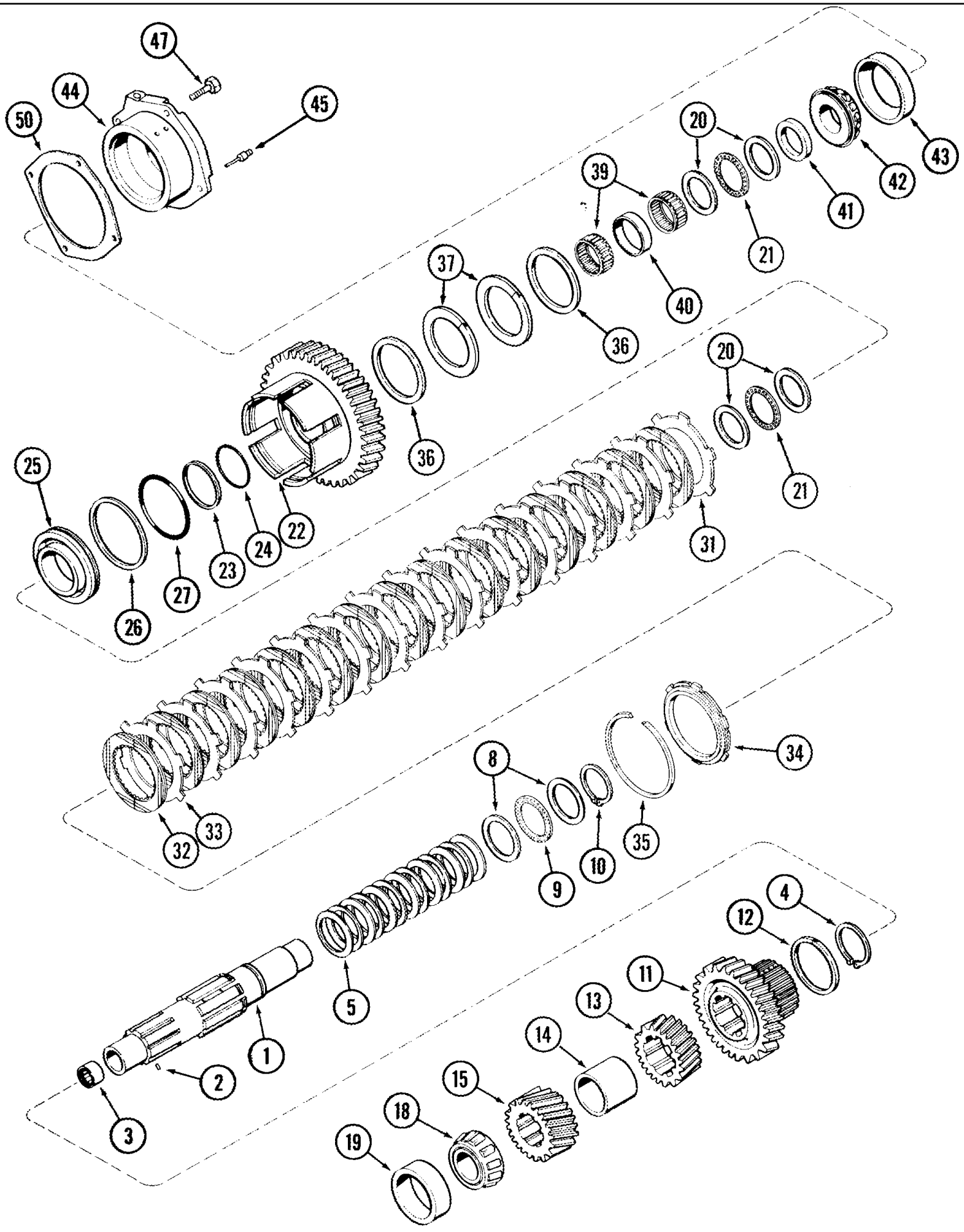
47
44
45
50
20
43
39
42
41
21
37
40
36
20
36
25
21
22
24
23
27
26
31
34
8
33
32
35
10
9
4
12
11
5
13
14
1
2
15
3
18
19

MX285 CASE IH MAGNUM TRACTOR (NORTH AMERICA)

06-20 RANGE TRANSMISSION - COUNTERSHAFT

ссылка	Номер детали	Кол-во	Описание
1	1954059C2	1	SHAFT, Inc. 2
2	38-3605	3	PIN, 3/32" x 5/16", Coiled, 3/32" x 5/16", Coiled
3	D63322	1	BEARING, NEEDLE,
4	144348C1	1	RING, SNAP,
5	1286012C2	13	WASHER,
8	1286043C1	2	WASHER, THRUST,
9	572182R1	1	BEARING, THRUST,
10	101-11250	1	RING, SNAP, #250, 2.356, Ext, No. 250
11	1285978C1	1	PINION, 39T
12	1286052C1	1	RING,
13	220057A1	1	PINION, 25T
14	1286041C2	1	SPACER,
15	1285990C1	1	PINION, 23T
18	84986C1	1	BEARING, CONE, , MX210, MX230
18	253485A1	1	BEARING, CONE, , MX255, MX285
19	40435	1	BEARING, CUP, , MX210, MX230
19	253486A1	1	BEARING, CUP, , MX255, MX285
20	1286042C1	4	WASHER, THRUST,
21	K620185	2	BEARING, THRUST,
22	297134A1	1	GEAR, 54T
23	1286077C1	1	RING,
24	1286081C1	1	O-RING,
25	242491A5	1	PISTON,
26	1286079C1	1	RING,
27	1286083C1	1	O-RING,
31	128114A1	1	DISC, Separator
32	86990276	15	DISC, Friction
33	92934C2	14	DISC, Separator
34	1342645C3	1	DISC, CLUTCH,
35	1285996C1	1	RING, SNAP,
36	1286028C2	2	RING,
37	297418A2	2	SEAL,
39	80907C1	2	BEARING, NEEDLE,
40	93269C1	1	SPACER,
41	1286038C2	1	SPACER,
42	287679C1	1	BEARING, ROLLER,
43	1968297C1	1	BEARING, CUP,
44	257099A2	1	CAGE, Inc. 45
45	1345888C1	1	PLUG,
47	613-10030	4	BOLT, Hex, M10 x 30, 8.8, Full Thd, M10 x 30
50	1286066C1	2	SHIM, 0,08 mm
50	1286067C1	2	SHIM, 0,10 mm
50	1286068C1	2	SHIM, 0,13 mm
50	1286069C1	2	SHIM, 0,30 mm
50	1286070C1	2	SHIM, 0,76 mm

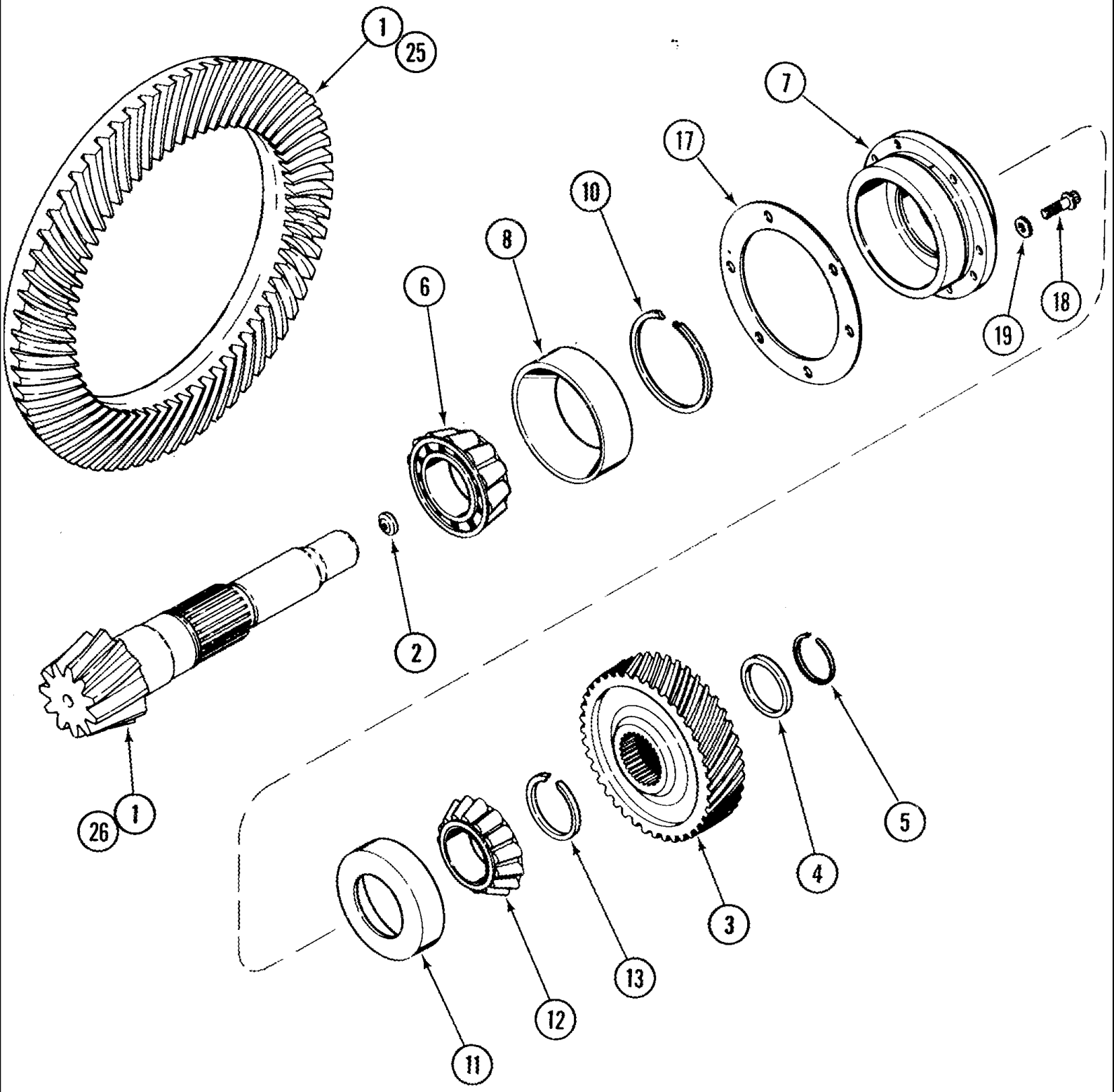
1
25
7
17
10
8
6
18
19
2
26
1
5
4
3
13
12
11

MX285 CASE IH MAGNUM TRACTOR (NORTH AMERICA)

06-21 TRANSMISSION - PINION SHAFT AND GEARS

ссылка	Номер детали	Кол-во	Описание
1	94616C2	1	GEAR SET, Inc. 2, MX210, MX230, MX255
2	92825C1	1	PLUG,
3	1285991C2	1	PINION, 46T
4	1286039C1	1	SPACER,
5	143906C1	1	RING, SNAP,
6	921684C1	1	BEARING, CONE, , MX210, MX230, MX255
6	251941A1	1	BEARING, CONE, , MX285
7	1068264C1	1	CAGE, Inc. 8, MX210, MX230, MX255
7	253132A1	1	CAGE, Inc, 8, MX285
8	921683C1	1	BEARING, CUP, , MX210, MX230, MX255
8	251942A1	1	BEARING, CUP, , MX285
10	120965C1	1	RING, SNAP,
11	108326H	1	BEARING, CUP,
12	94666C1	1	BEARING, CONE,
13	131432A1	1	RING, 3,62 mm
13	94661C1	1	RING, 3,70 mm
13	94662C1	1	RING, 3,78 mm
13	94663C1	1	RING, 3,86 mm
13	110042C1	1	RING, 3,93 mm
13	94664C1	1	RING, 4,02 mm
13	131433A1	1	RING, 4,10 mm
13	131434A1	1	RING, 4,18 mm
17	120977C1	2	SHIM, 0,08 mm
17	120978C1	2	SHIM, 0,10 mm
17	120979C1	2	SHIM, 0,13 mm
17	120980C1	2	SHIM, 0,30 mm
18	566-12035	6	SCREW, 12 Pt Hd, M10 x 35, 12.9, M12 x 35; 12,9
19	1251958C1	6	WASHER,
25	224870A1	1	RING, , MX285
26	277610A1	1	PINION, BEVEL, Inc. 2, MX285

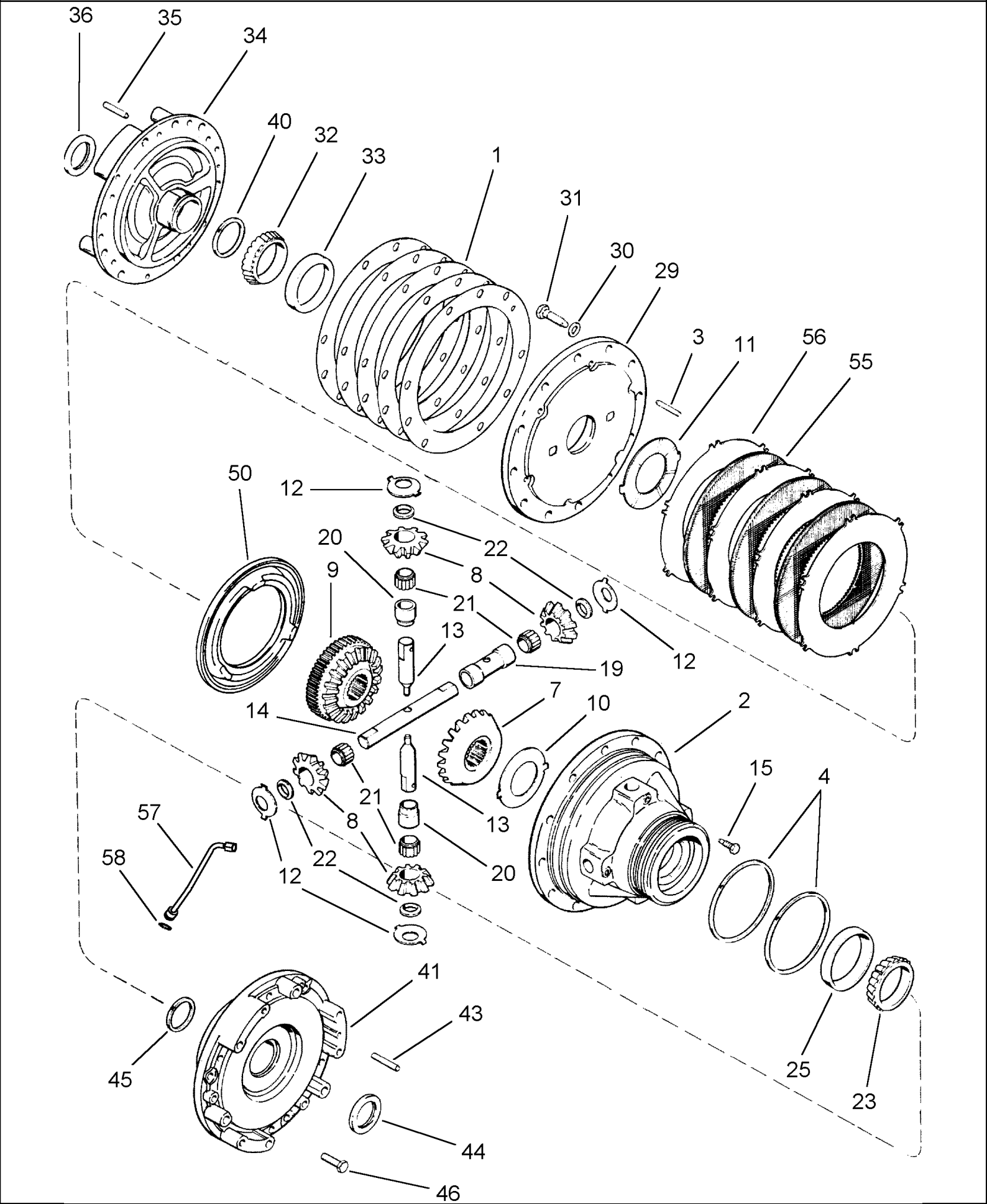
36
35
34
40
32
33
1
31
30
29
3
11
56
55
50
12
22
20
8
9
21
13
19
12
14
7
10
2
15
4
57
58
12
22
8
21
13
20
41
43
45
25
23
44
46

MX285 CASE IH MAGNUM TRACTOR (NORTH AMERICA)

06-22 TRANSMISSION - DIFFERENTIAL

ссылка	Номер детали	Кол-во	Описание
1	120513C2	AR	SHIM, 0,09 mm
1	120512C2	AR	SHIM, 0,10 mm
1	120509C2	AR	SHIM, 0,18 mm
1	120510C2	AR	SHIM, 0,31 mm
1	120511C2	AR	SHIM, 0,74 mm
2	229594A1	1	CAGE,
3	137023A1	6	DOWEL, 10 x 60 mm
4	148939C1	2	SEAL,
7	1259633C3	1	GEAR,
8	92905C1	4	PINION, 10T
9	1259634C3	1	PINION,
10	227116A2	1	WASHER, THRUST,
11	227117A2	1	WASHER, THRUST,
12	92718C2	4	WASHER,
13	92906C1	2	SHAFT, SHORT,
14	92907C1	1	SHAFT,
15	1997421C1	2	BOLT,
19	1289349C1	1	SPACER,
20	1289350C1	2	SPACER,
21	1270697C1	112	NEEDLE, 28 Per Gear
22	1289348C1	4	RING,
23	622336C1	1	BEARING, CONE,
25	A63171	1	BEARING, CUP,
29	229593A1	1	COVER,
30	896-11016	12	WASHER, M17.5 x 30 x 4, HT, 17,5 x 30 x 4 mm
31	828-16055	12	BOLT, Hex, M16 x 55, 10.9, Full Thd, Hex, M16 x 55, 10.9, Full Thd
32	67250C1	1	BEARING, BALL,
33	67251C1	1	BEARING, CUP,
34	120503C2	1	RETAINER,
35	136433A1	5	DOWEL, 12 x 65 mm
36	139059C1	1	SEAL,
40	139060C2	2	RING,
41	1997369C1	1	RETAINER,
43	136433A1	5	DOWEL, 12 x 65 mm
44	139059C1	1	SEAL,
45	139060C2	1	RING,
46	613-16040	3	BOLT, Hex, M16 x 40, 8.8, Full Thd, Hex, M16 x 40, 8.8, Full Thd
46	613-16045	3	BOLT, Hex, M16 x 45, 8.8, Full Thd, Hex, M16 x 45, 8.8, Full Thd
50	1997422C1	1	PISTON,
55	120679C1	3	PLATE,
56	92915C1	4	PLATE,
57	409738A1	1	TUBE,
58	238-5115	1	O-RING, -115, 70 Duro, .674" ID x .103" Thk,

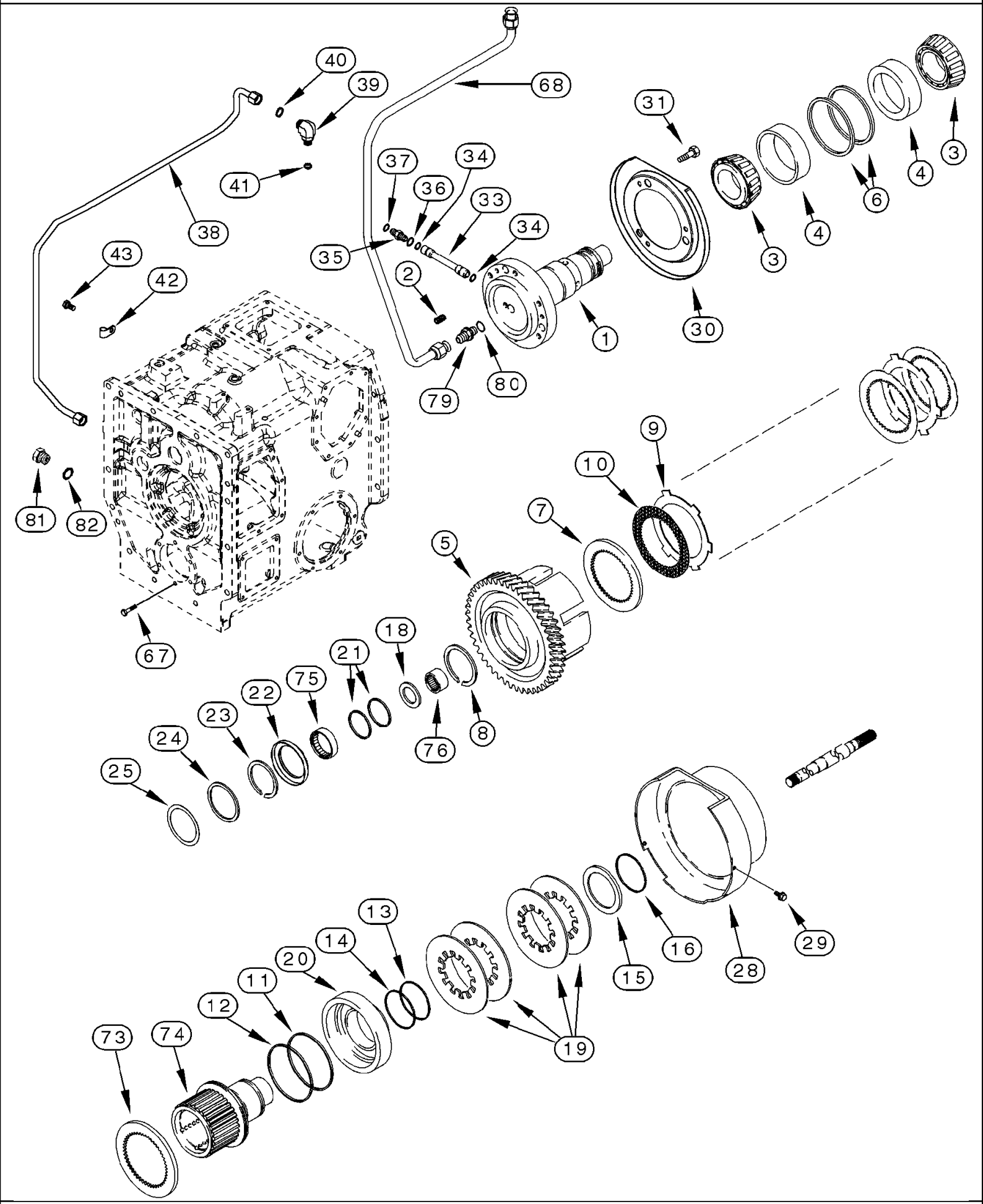
40
39
68
31
3
4
6
4
3
41
37
34
36
33
34
38
35
43
42
2
1
30
79
80
9
10
81
82
7
5
67
18
21
75
22
23
24
25
76
8
13
14
20
11
12
73
74
19
15
16
28
29

MX285 CASE IH MAGNUM TRACTOR (NORTH AMERICA)

06-23 RANGE TRANSMISSION - MFD CLUTCH

ссылка	Номер детали	Кол-во	Описание
1	199320A1	1	SHAFT,
2	877-11010	1	SET SCREW, Hex Soc, M10 x 10, Cup Pt, M10 x 10
3	630694C1	2	BEARING, CONE,
4	630695C1	2	BEARING, CUP,
5	222856A1	1	PINION,
6	101-21412	2	RING, SNAP, #412, 4.430", Int, No. 412
7	128297A1	1	DISC, CLUTCH,
8	101-11400	1	RING, SNAP, #400, 3.771, Ext, No. 400
9	128114A1	12	DISC, , MX210, MX230
9	128114A1	15	DISC, , MX255, MX285
10	1997907C1	13	PLATE, , MX210, MX230
10	1997907C1	16	PLATE, , MX255, MX285
11	92562C1	1	RING,
12	93138C1	1	O-RING,
13	1997879C1	1	SEAL,
14	238-7037	1	O-RING, -037, Cl 7, 2.489" ID x .070" Thk,
15	123135A1	1	WASHER,
16	123517A1	1	SNAP RING,
18	121192A1	1	WASHER, THRUST,
19	1997880C1	4	SPRING, BELLEVILLE, , MX210, MX230
19	1997880C1	6	SPRING, BELLEVILLE, , MX255, MX285
20	231935A2	1	PISTON, , MX210, MX230
20	231936A2	1	PISTON, , MX255, MX285
21	1286024C1	2	RING,
22	1997885C1	1	SEAL, OIL,
23	1997891C1	1	RING, SNAP,
24	1277309C1	1	WASHER,
25	138121A1	AR	SHIM, 0,20 mm
25	1997893C1	AR	SHIM, 0,51 mm
25	1997894C1	AR	SHIM, 0,56 mm
25	1997895C1	AR	SHIM, 0,64 mm
28	117853A1	1	HOUSING,
29	782-84413	3	SCREW, SELF TAP, Hex Wash Hd, M4.8 x 13, M4,8 X 13
30	1997881C1	1	SHIELD,
31	806-8016	3	BOLT, Hex, Lock, M8 x 16, Cl 10.9, M8 x 16; 10.9
33	93201C1	1	TUBE,
34	238-5013	2	O-RING, -013, 70 Duro, .426" ID x .070" Thk,
35	201-102	1	CONNECTOR, HYD., 13/16"-16 ORFS x 3/4"-16 ORB, 13/16 fc sl x 3/4 Or, Inc. 36, 37
36	237-6008	1	O-RING, 8-1, 90 Duro, .644" ID x .087" Thk,
37	238-6014	1	O-RING, -014, 90 Duro, .489" ID x .070" Thk,
38	258154A3	1	TUBE,
39	700-305	1	ELBOW, 90є, 13/16"-18 ORFS x M18 x 1.5 ORB, 13/16 fc sl x 18 Or, Inc. 40 - 41
40	637-63153	1	O-RING, Cl 6, 15.3MM ID x 2.2 Thk, 15,3 ID x 2,2
41	238-6014	1	O-RING, -014, 90 Duro, .489" ID x .070" Thk,
42	515-23127	1	CLAMP, 1/2", Insul, 3/8" Bolt,

ссылка	Номер детали	Кол-во	Описание
43	614-10020	1	BOLT, Hex, M10 x 20, 8.8, Full Thd,
67	814-10050	6	BOLT, Hex, M10 x 50, 8.8,
68	124306A1	1	PIPE,
73	128297A1	1	DISC, CLUTCH,
74	198519A3	1	HUB ASSY., Inc. 75, 76
75	112822R91	1	BEARING,
76	F19478	1	BEARING,
79	218-5351	1	CONNECTOR, HYD., 3/4"-16, 37є x 9/16"-18, O-Ring, 3/4 fl x 9/16 Or, Inc. 80
80	237-6006	1	O-RING, 6-1, 90 Duro, .468" ID x .078" Thk,
81	214389	1	PLUG, Hex Hd, 3/4"-16 ORB, 3/4 Or, Inc. 82, Without Mechanical Front Drive
82	237-6008	1	O-RING, 8-1, 90 Duro, .644" ID x .087" Thk,

MX285 CASE IH MAGNUM TRACTOR (NORTH AMERICA)

06-24 MFD AXLE - DRIVE SHAFT

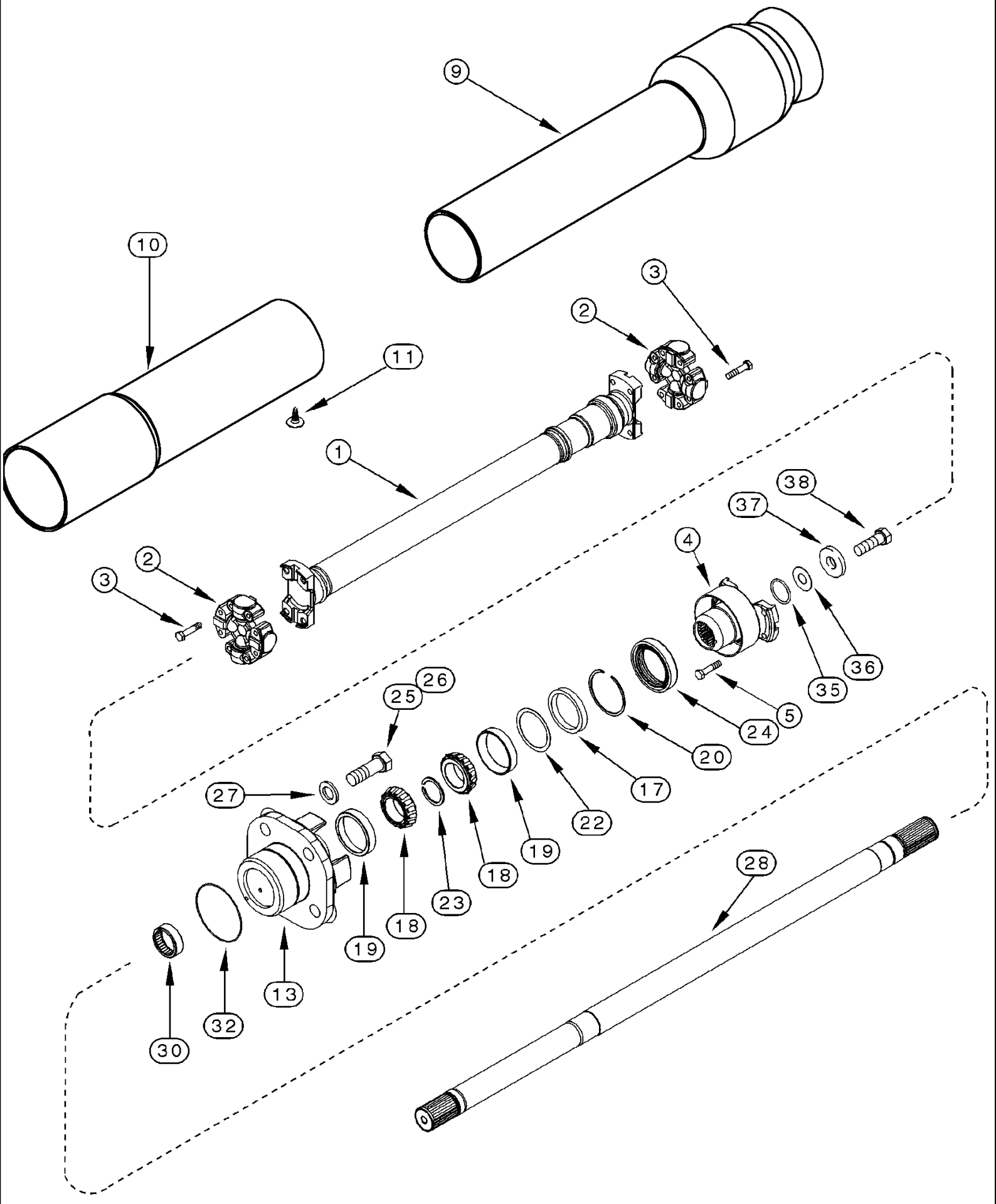

MX285 CASE IH MAGNUM TRACTOR (NORTH AMERICA)

06-24 MFD AXLE - DRIVE SHAFT

ссылка	Номер детали	Кол-во	Описание
1	258853A2	1	SHAFT, DRIVE, Inc. 2, 3
2	258854A2	2	SPIDER, U-JOINT,
3	828-10045	8	BOLT, Hex, M10 x 45, 10.9, M10 x 45; 10.9
4	258855A1	1	YOKE,
5	828-10045	8	BOLT, Hex, M10 x 45, 10.9, M10 x 45; 10.9
	441554A2	1	SHIELD, Inc. 9 - 10
9	NSS	1	NOT SERVICED SEPARATELY, Sleeve
10	NSS	1	NOT SERVICED SEPARATELY, Sleeve
11	87400216	2	FASTENER,
13	199922A2	1	CAGE,
17	199923A1	1	SPACER,
18	235519A1	2	BEARING, CONE,
19	663558R1	2	BEARING, CUP, 2-57/64 OD
20	199981A1	1	RING, SNAP,
22	249528A1	AR	SHIM, 0,203 mm
22	199929A1	AR	SHIM, 0,356 mm
22	199928A1	AR	SHIM, 0,508 mm
22	199927A1	AR	SHIM, 0,559 mm
22	222675A1	AR	SHIM, 0,635 mm
23	222732A1	1	RING, SNAP,
24	226851A1	1	SEAL, OIL,
25	628-20060	2	BOLT, Hex, M20 x 60, 10.9, Full Thd, M20 x 60; 10,9
26	828-20150	2	BOLT, Hex, M20 x 150, 10.9, M20 x 150; 10.9
27	896-12020	4	WASHER, M20 x 37.5 x 4, HT, 22 x 37 x 4 mm
28	197595A3	1	SHAFT,
30	205369R91	1	BEARING, NEEDLE,
32	238-5043	1	O-RING, -043, 70 Duro, 3.489" ID x .070" Thk,
35	238-5220	1	O-RING, -220, 70 Duro, 1.359" ID x .139" Thk,
36	337680A1	AR	SHIM, 0,203 mm
36	222674A1	AR	SHIM, 0,356 mm
36	222000A1	AR	SHIM, 0,508 mm
36	222001A1	AR	SHIM, 0, 559 mm
36	222002A1	AR	SHIM, 0,635 mm
37	221943A1	1	WASHER,
38	628-16050	1	BOLT, Hex, M16 x 50, 10.9, Full Thd, Hex, M16 x 50, 10.9, Full Thd

MX285 CASE IH MAGNUM TRACTOR (NORTH AMERICA)

06-25 TRANSMISSION CONTROL VALVE LOCATION

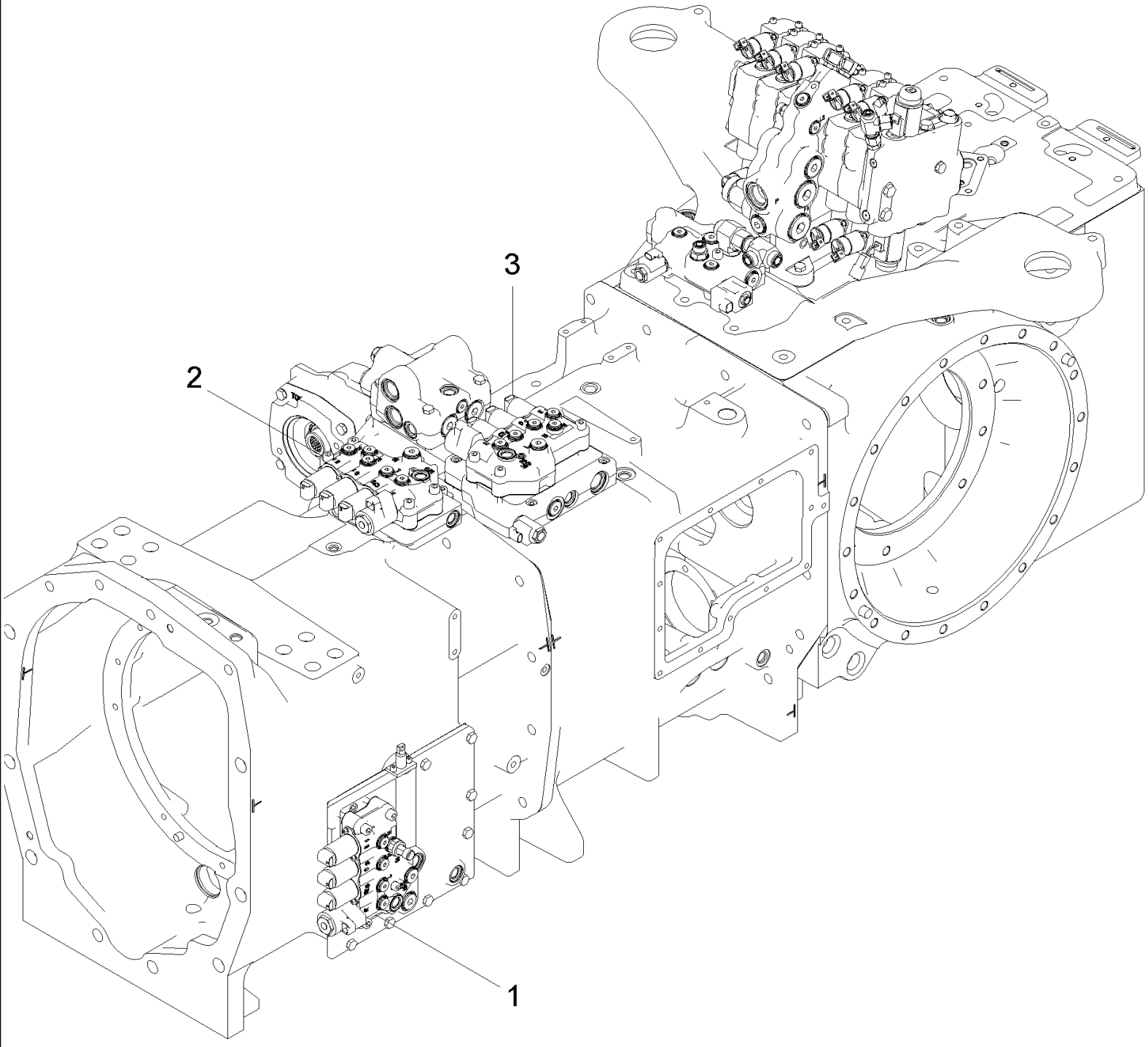

MX285 CASE IH MAGNUM TRACTOR (NORTH AMERICA)

06-25 TRANSMISSION CONTROL VALVE LOCATION

ссылка	Номер детали	Кол-во	Описание
1	450729A2	1	VALVE, Speed, See Figure 06-26
2	450724A2	1	VALVE, Odd/Even, Without Creep Speed, See Figure 06-27
2	450728A2	1	VALVE, Odd/Even, With Creep Speed, See Figure 06-28
3	450722A2	1	VALVE, Range, Without Mechanical Front Drive, See Figure 06-29
3	450728A2	1	VALVE, Range, See Figure 06-28, With Mechanical Front Drive

MX285 CASE IH MAGNUM TRACTOR (NORTH AMERICA)

06-26 VALVE ASSEMBLY - TRANSMISSION CONTROL (450729A2)

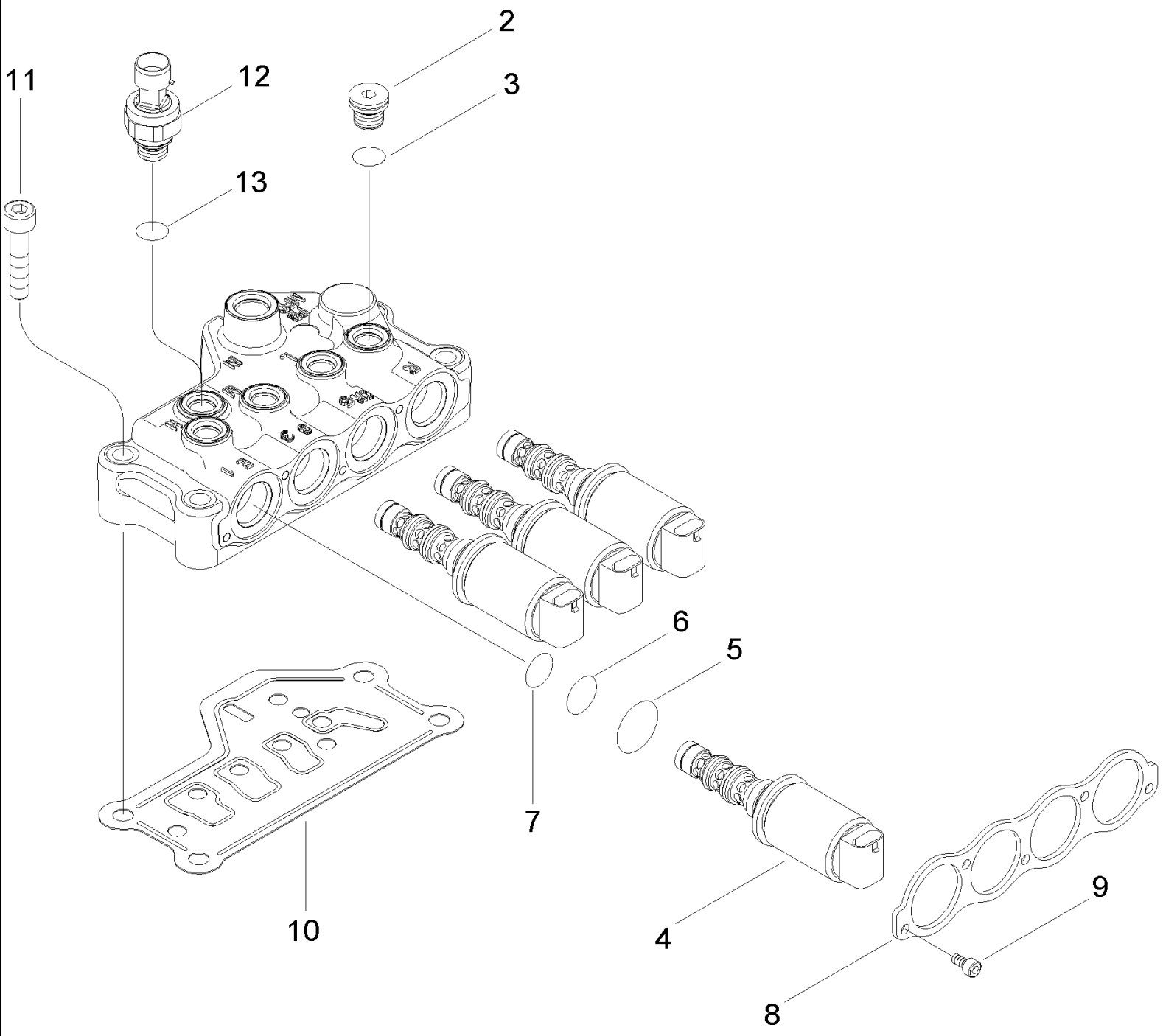

MX285 CASE IH MAGNUM TRACTOR (NORTH AMERICA)

06-26 VALVE ASSEMBLY - TRANSMISSION CONTROL (450729A2)

ссылка	Номер детали	Кол-во	Описание
	450729A2	1	VALVE, Inc. 1 - 9, 12, 13
1	NSS	1	NOT SERVICED SEPARATELY, Body, Valve
2	221576A1	4	PLUG, Hex Soc, M14 x 1.5, ORB, M14 Or, Inc. 3
3	637-63113	1	O-RING, Cl 6, 11.3MM ID x 2.2 Thk, 11,3 ID x 2,2
4	86989388	4	SOLENOID, Inc. 5 - 7
5	87014033	1	O-RING, -019, Cl 7, .801" ID x .070" Thk,
6	238-7016	1	O-RING, -016, Cl 7, .614" ID x .070" Thk,
7	238-7015	1	O-RING, -015, Cl 7, .551" ID x .070" Thk,
8	86985026	1	COVER,
9	864-5010	6	SCREW, Hex Soc Hd, M5 x 10, 8.8, M5 x 10
10	444196A2	1	GASKET, , BSN AJB0355338
10	87445066	1	GASKET, , ASN AJB0355338
11	864-10055	4	SCREW, Hex Soc Hd, M10 x 55, 8.8, M10 x 55 mm
12	86987513	1	SENSOR, Inc. 13
13	637-63113	1	O-RING, Cl 6, 11.3MM ID x 2.2 Thk, 11,3 ID x 2,2

06-27 VALVE ASSEMBLY - TRANSMISSION CONTROL (450724A2)

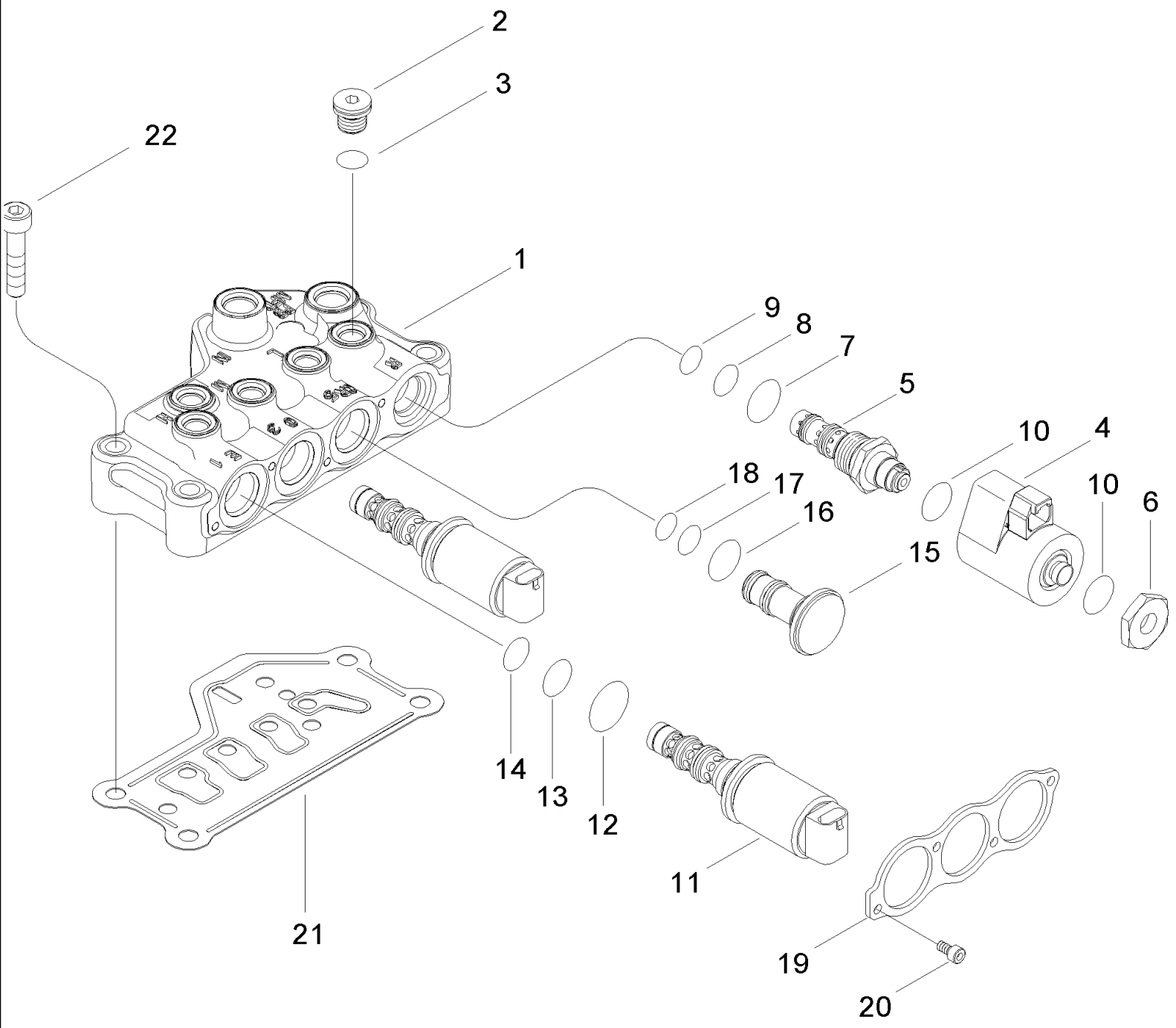

MX285 CASE IH MAGNUM TRACTOR (NORTH AMERICA)

06-27 VALVE ASSEMBLY - TRANSMISSION CONTROL (450724A2)

ссылка	Номер детали	Кол-во	Описание
	450724A2	1	VALVE, Inc. 1 - 20
1	NSS	1	NOT SERVICED SEPARATELY, Body, Valve
2	221576A1	4	PLUG, Hex Soc, M14 x 1.5, ORB, M14 Or, Inc. 3
3	637-63113	1	O-RING, Cl 6, 11.3MM ID x 2.2 Thk, 11,3 ID x 2,2
	234783A8	1	SOLENOID, Inc. 4 - 10
4	NSS	1	NOT SERVICED SEPARATELY, Coil
5	NSS	1	NOT SERVICED SEPARATELY, Cartridge
6	252462A2	1	NUT,
7	237-6010	1	O-RING, 10-1, 90 Duro, .755" ID x .097" Thk,
8	238-5015	1	O-RING, -015, 70 Duro, .551" ID x .070" Thk,
9	256633A1	1	O-RING, 12,9 ID x 1,24 mm
10	238-7115	2	O-RING, -115, Cl 7, .674" ID x .103" Thk,
11	86989388	2	SOLENOID, Inc. 12 - 14
12	87014033	1	O-RING, -019, Cl 7, .801" ID x .070" Thk,
13	238-7016	1	O-RING, -016, Cl 7, .614" ID x .070" Thk,
14	238-7015	1	O-RING, -015, Cl 7, .551" ID x .070" Thk,
15	86984122	1	PLUG, Inc. 16 - 18
16	87014033	1	O-RING, -019, Cl 7, .801" ID x .070" Thk,
17	238-7016	1	O-RING, -016, Cl 7, .614" ID x .070" Thk,
18	238-7015	1	O-RING, -015, Cl 7, .551" ID x .070" Thk,
19	86985027	1	COVER,
20	864-5010	4	SCREW, Hex Soc Hd, M5 x 10, 8.8, M5 x 10
21	444196A2	1	GASKET, , BSN AJB0355338
21	87445066	1	GASKET, , ASN AJB0355338
22	864-10055	4	SCREW, Hex Soc Hd, M10 x 55, 8.8, M10 x 55 mm

MX285 CASE IH MAGNUM TRACTOR (NORTH AMERICA)

06-28 VALVE ASSEMBLY - TRANSMISSION CONTROL (450728A2)

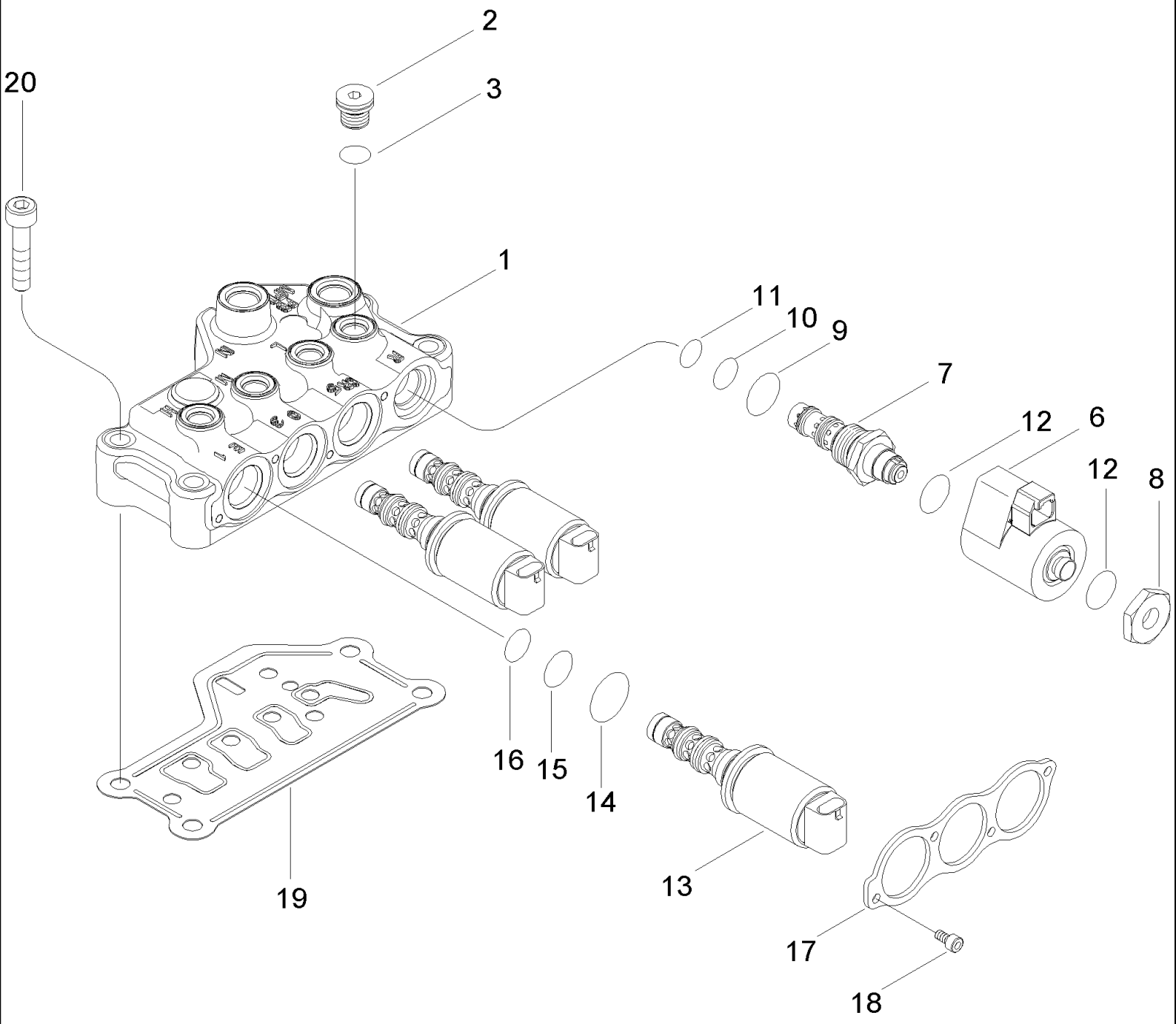

MX285 CASE IH MAGNUM TRACTOR (NORTH AMERICA)

06-28 VALVE ASSEMBLY - TRANSMISSION CONTROL (450728A2)

ссылка	Номер детали	Кол-во	Описание
	450728A2	1	VALVE, Inc. 1 - 18
1	NSS	1	NOT SERVICED SEPARATELY, Body, Valve
2	221576A1	4	PLUG, Hex Soc, M14 x 1.5, ORB, M14 Or, Inc. 3
3	637-63113	1	O-RING, Cl 6, 11.3MM ID x 2.2 Thk, 11,3 ID x 2,2
	234783A8	1	SOLENOID, Inc. 6 - 12
6	NSS	1	NOT SERVICED SEPARATELY, Coil
7	NSS	1	NOT SERVICED SEPARATELY, Cartridge
8	252462A2	1	NUT,
9	237-6010	1	O-RING, 10-1, 90 Duro, .755" ID x .097" Thk,
10	238-5015	1	O-RING, -015, 70 Duro, .551" ID x .070" Thk,
11	256633A1	1	O-RING, 12,9 ID x 1,24 mm
12	238-7115	2	O-RING, -115, Cl 7, .674" ID x .103" Thk,
13	86989388	3	SOLENOID, Inc. 14 - 16
14	87014033	1	O-RING, -019, Cl 7, .801" ID x .070" Thk,
15	238-7016	1	O-RING, -016, Cl 7, .614" ID x .070" Thk,
16	238-7015	1	O-RING, -015, Cl 7, .551" ID x .070" Thk,
17	86985027	1	COVER,
18	864-5010	4	SCREW, Hex Soc Hd, M5 x 10, 8.8, M5 x 10
19	444196A2	1	GASKET, , BSN AJB0355338
19	87445066	1	GASKET, , ASN AJB0355338
20	864-10055	4	SCREW, Hex Soc Hd, M10 x 55, 8.8, M10 x 55 mm

MX285 CASE IH MAGNUM TRACTOR (NORTH AMERICA)

06-29 VALVE ASSEMBLY - TRANSMISSION CONTROL (450722A2)

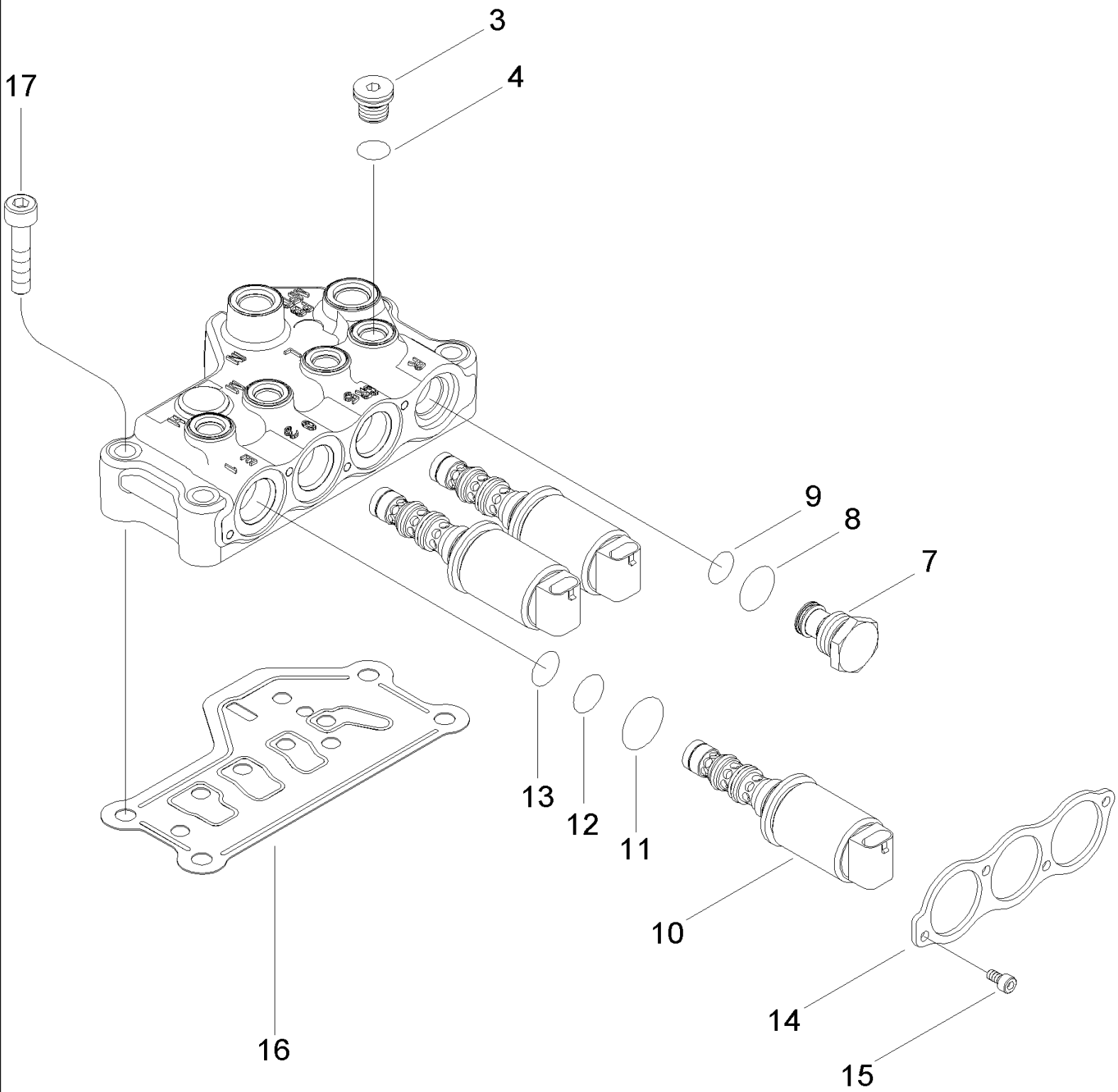

MX285 CASE IH MAGNUM TRACTOR (NORTH AMERICA)

06-29 VALVE ASSEMBLY - TRANSMISSION CONTROL (450722A2)

ссылка	Номер детали	Кол-во	Описание
	450722A2	1	VALVE, Inc. 1 - 15
1	NSS	1	NOT SERVICED SEPARATELY, Body, Valve
3	221576A1	4	PLUG, Hex Soc, M14 x 1.5, ORB, M14 Or, Inc. 4
4	637-63113	1	O-RING, Cl 6, 11.3MM ID x 2.2 Thk, 11,3 ID x 2,2
7	315363A1	1	PLUG, Inc. 8, 9
8	237-6010	1	O-RING, 10-1, 90 Duro, .755" ID x .097" Thk,
9	238-5015	1	O-RING, -015, 70 Duro, .551" ID x .070" Thk,
10	86989388	3	SOLENOID, Inc. 11 - 13
11	87014033	1	O-RING, -019, Cl 7, .801" ID x .070" Thk,
12	238-7016	1	O-RING, -016, Cl 7, .614" ID x .070" Thk,
13	238-7015	1	O-RING, -015, Cl 7, .551" ID x .070" Thk,
14	86985027	1	COVER,
15	864-5010	4	SCREW, Hex Soc Hd, M5 x 10, 8.8, M5 x 10
16	444196A2	1	GASKET, , BSN AJB0355338
16	87445066	1	GASKET, , ASN AJB0355338
17	864-10055	4	SCREW, Hex Soc Hd, M10 x 55, 8.8, M10 x 55 mm

06-30 PEDAL - INCHING

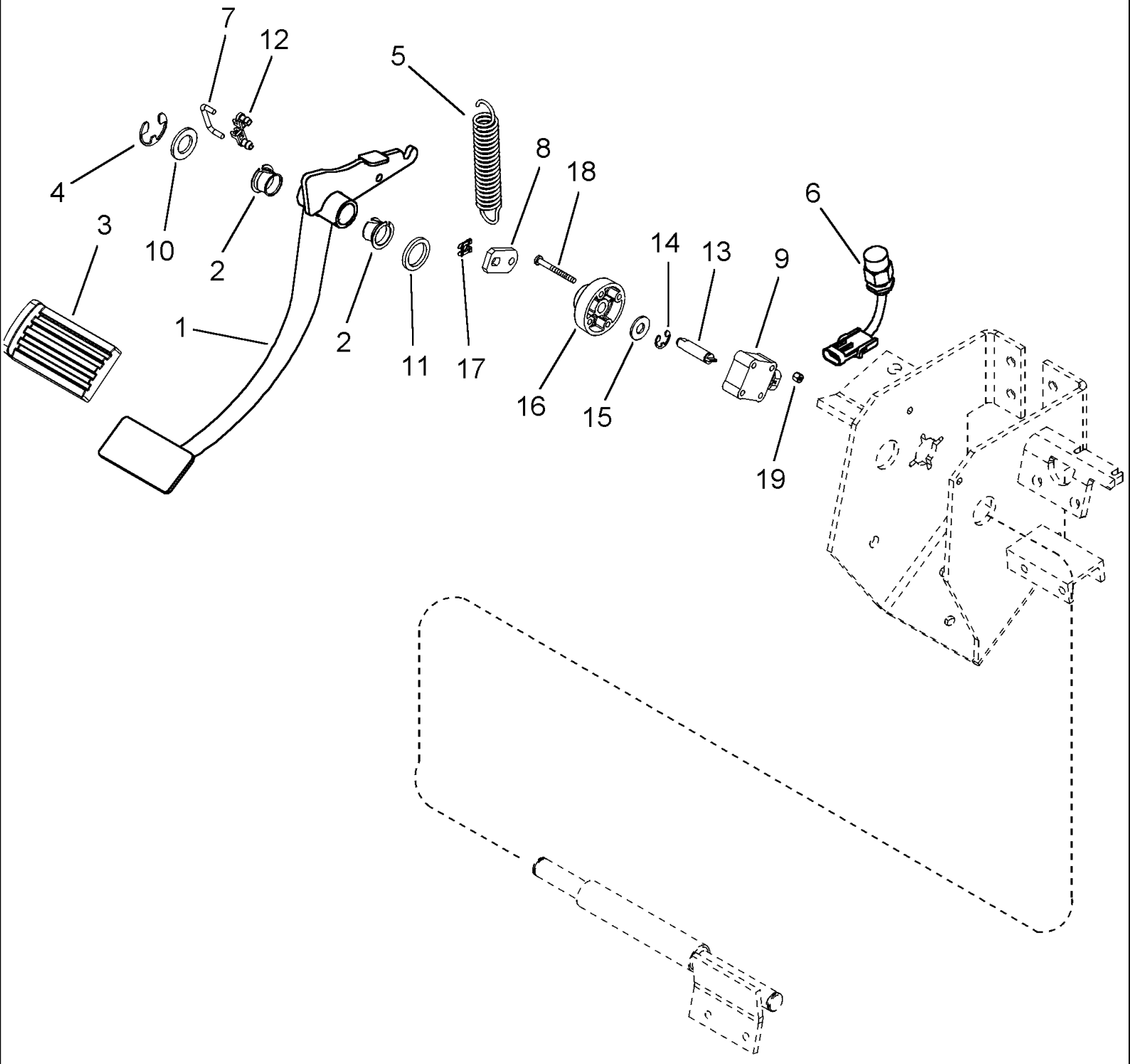

MX285 CASE IH MAGNUM TRACTOR (NORTH AMERICA)

06-30 PEDAL - INCHING

ссылка	Номер детали	Кол-во	Описание
1	416255A3	1	PEDAL ASSY., Inc. 2, 3
2	1990753C1	2	PLASTIC RING,
3	1999382C1	1	PAD, RUBBER,
4	800-3120	1	CIRCLIP, M20, 20 mm
5	303754A1	1	SPRING,
6	414144A1	1	SWITCH, Bottom Of Clutch
7	255077A1	1	ROD,
8	302275A2	1	LEVER,
9	301271A1	1	SENSOR, Position
10	895-11018	1	WASHER, M18 x 34 x 3, 20 x 34 x 3 mm
11	258242A1	1	WASHER,
12	256833A1	2	RETAINER,
13	295013A2	1	PIN,
14	800-4311	1	CIRCLIP, M11, 11 mm
15	495-21044	1	WASHER, 3/8", 7/16 x 1 x 5/64
16	295012A2	1	BUSHING,
17	3226538R1	1	CLIP,
18	840-1550	4	SCREW, Cross Pan Hd, M5 x 50, M5 x 50; 4,8
19	832-10405	4	NUT, LOCK, M5 x .8, Cl 8, M5

MX285 CASE IH MAGNUM TRACTOR (NORTH AMERICA)

06-31 LEVER ASSEMBLY - TRANSMISSION CONTROL

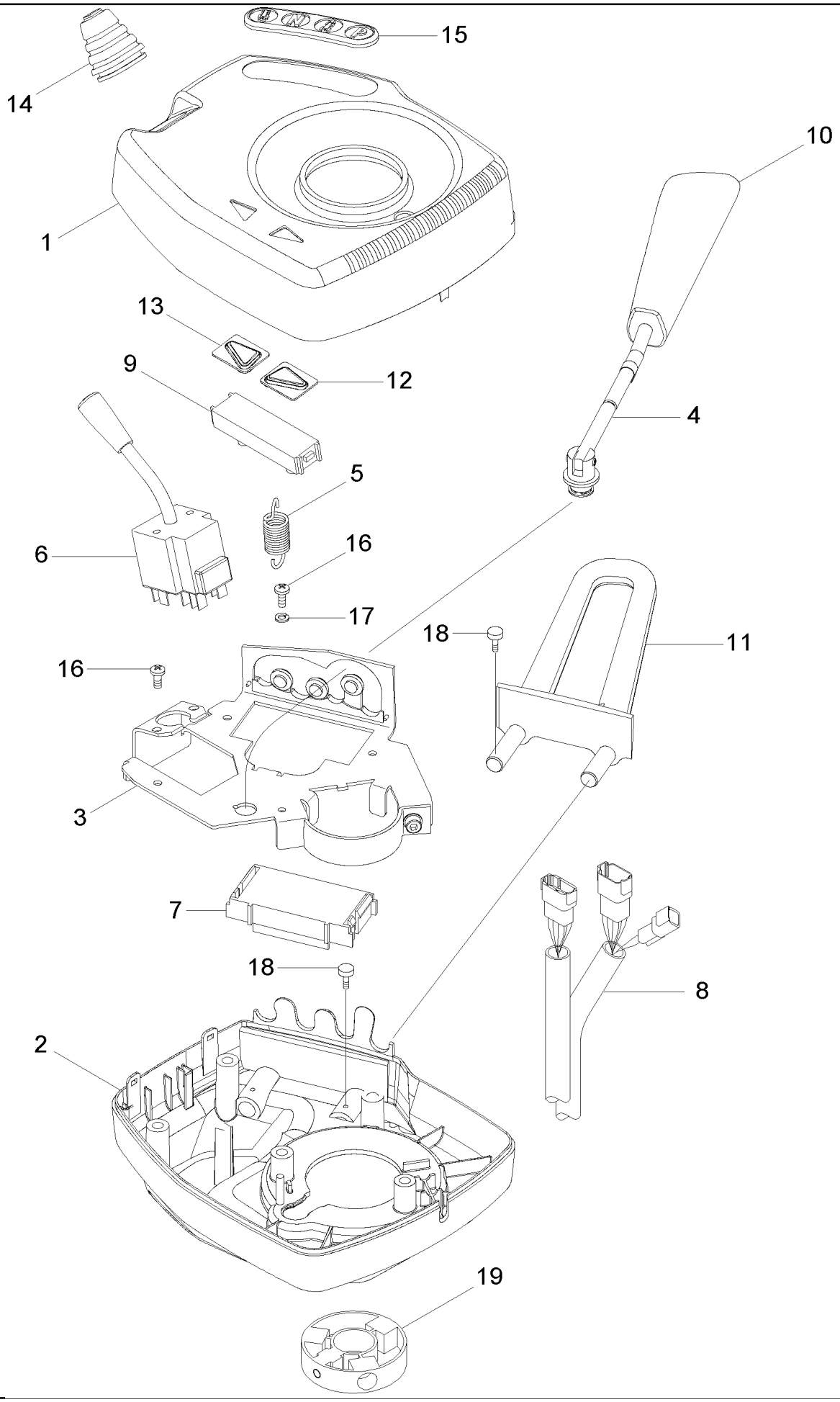

MX285 CASE IH MAGNUM TRACTOR (NORTH AMERICA)

06-31 LEVER ASSEMBLY - TRANSMISSION CONTROL

ссылка	Номер детали	Кол-во	Описание
	86993721	1	CONTROL, Inc. 1 -18
1	325064A1	1	HOUSING, Upper
2	325065A1	1	HOUSING, Lower
3	325362A1	1	CHASSIS,
4	325363A1	1	LEVER, Transmission Control
5	250939A1	1	SPRING,
6	284777A1	1	SWITCH, Turn Signal, Horn, High Beam
7	447256A2	1	SWITCH, Transmission Control
8	375681A1	1	HARNESS, Transmission Control And Turn Signal Self-Cancelling Sensor (Sensor Not Serviced Separately)
9	303465A2	1	LAMP,
10	325533A1	1	HANDLE,
11	325066A2	1	GUARD,
12	303466A1	1	SYMBOLS, Right-Hand
13	303867A2	1	TUBE, Left-Hand
14	325068A1	1	BELLOWS,
15	358353A1	1	SYMBOLS,
16	840-1410	7	SCREW, Cross Pan Hd, M4 x 10, M4 x 10; 4.8
17	892-11004	7	WASHER, LOCK, M4, M4
18	905974R1	2	SCREW, SELF TAP, Pan Hd, M2.9 x 13, M2.9 x 13
19	253679A1	1	RING, Magnet

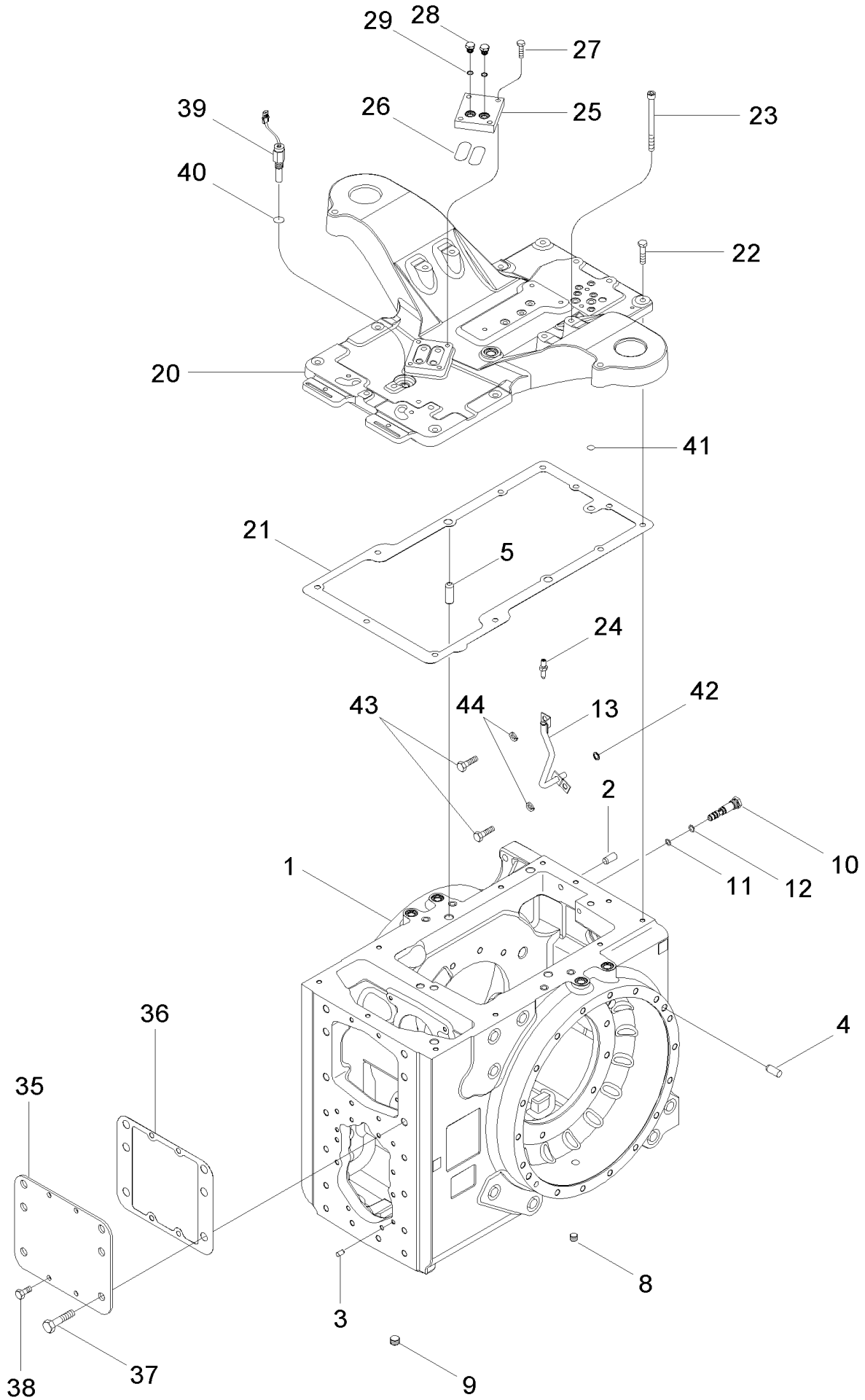
29
28
27
39
26
25
23
40
22
20
41
21
5
24
43
44
13
42
2
10
1
11
12
36
4
35
8
3
38
37
9

MX285 CASE IH MAGNUM TRACTOR (NORTH AMERICA)

06-32 REAR AXLE - HOUSING

ссылка	Номер детали	Кол-во	Описание
1	410749A3	1	HOUSING ASSY., Inc. 2 - 12
2	837-16035	1	DOWEL, M16 x 35, 16 x 35 mm
3	837-10020	2	DOWEL, M10 x 20, M10 x 20
4	837-16040	4	DOWEL, M16 x 40, 16 x 40 mm
5	37-11232	2	DOWEL, 3/4" x 2", 3/4 x 2
8	192791A1	2	PLUG, 1/2 in
9	192792A1	1	PLUG, 3/4 in
10	411075A1	1	FITTING,
11	238-6111	1	O-RING, -111, 90 Duro, .424" ID x .103" Thk,
12	238-6112	1	O-RING, -112, 90 Duro, .487" ID x .103" Thk,
13	409741A1	1	TUBE ASSY.,
20	414416A3	1	COVER,
21	413900A1	1	GASKET,
22	828-12050	11	BOLT, Hex, M12 x 50, 10.9, M12 x 50; 10.9
23	863-12150	4	SCREW, Hex Soc Hd, M12 x 150, 12.9, M12 x 150; 12.9
24	414320A1	1	FITTING,
25	440076A1	1	PLATE,
26	238-6139	2	O-RING, -139, 90 Duro, 2.175" ID x .103" Thk,
27	628-10035	4	BOLT, Hex, M10 x 35, 10.9, Full Thd, M10 x 35; 10.9
28	220064A1	2	PLUG, M14 x 1.5, ORB, Inc. 29
29	637-63113	1	O-RING, Cl 6, 11.3MM ID x 2.2 Thk, 11,3 ID x 2,2
35	236602A1	1	COVER, , Without Hitch
36	379145A1	1	GASKET,
37	628-20045	6	BOLT, Hex, M20 x 45, 10.9, Full Thd, M20 x 45; 10,9
38	628-12025	4	BOLT, Hex, M12 x 25, 10.9, Full Thd, M12 x 25; 10.9
39	352787A2	1	SENSOR, PTO and Transmission Speed
40	238-5115	1	O-RING, -115, 70 Duro, .674" ID x .103" Thk, 9/16 ID x 1/16
41	238-5111	1	O-RING, -111, 70 Duro, .424" ID x .103" Thk,
42	239-5112	1	O-RING, Rect, .5" ID x .688" OD, Cl 5,
43	613-12025	2	BOLT, Hex, M12 x 25, 8.8, Full Thd, M12 x 25; 8.8
44	892-11012	2	WASHER, LOCK, M12, M12

06-33 BREATHER - TRANSMISSION

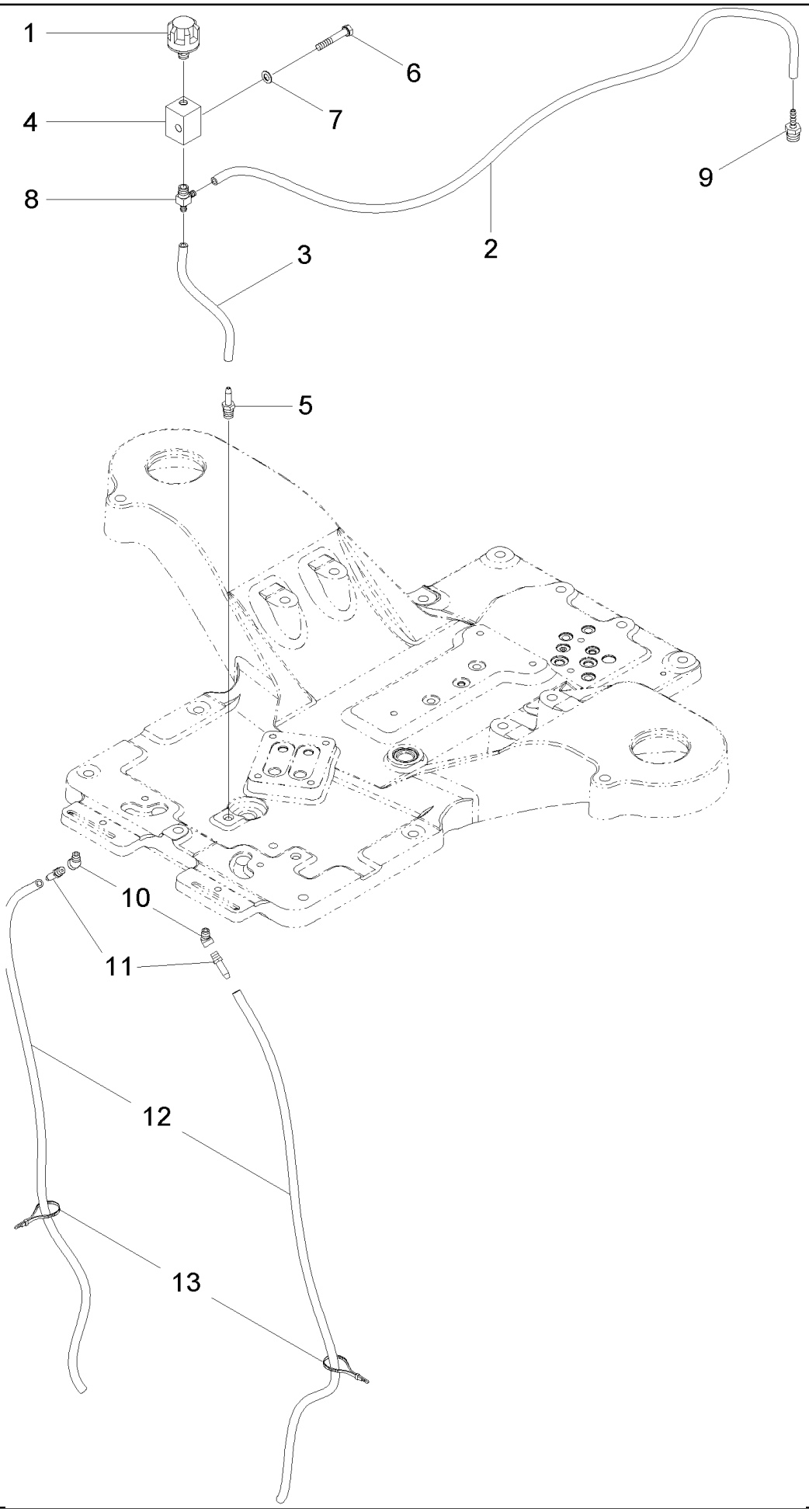

MX285 CASE IH MAGNUM TRACTOR (NORTH AMERICA)

06-33 BREATHER - TRANSMISSION

сылка	Номер детали	Кол-во	Описание
1	1971726C1	1	BREATHER,
2	359116A1	1	HOSE,
3	359117A1	1	HOSE,
4	132093A2	1	BLOCK,
5	220-502	1	COUPLING, BREAK AWAY,
6	814-8050	1	BOLT, Hex, M8 x 50, 8.8, M8 x 50; 8,8
7	895-15008	1	WASHER, M8 x 20 x 1.6, 9 x 20 x 1,6 mm
8	369378A1	1	TEE,
9	369941A1	1	COUPLING,
10	217-15	2	ELBOW, 45є, 1/8"-27 NPTF, Fem x 1/8"-27 NPTF Male,
11	217-120	2	ELBOW, 1/4" Hose x 1/8" NPTF, Barbed,
12	413825A1	2	HOSE,
13	L11541	2	STRAP,

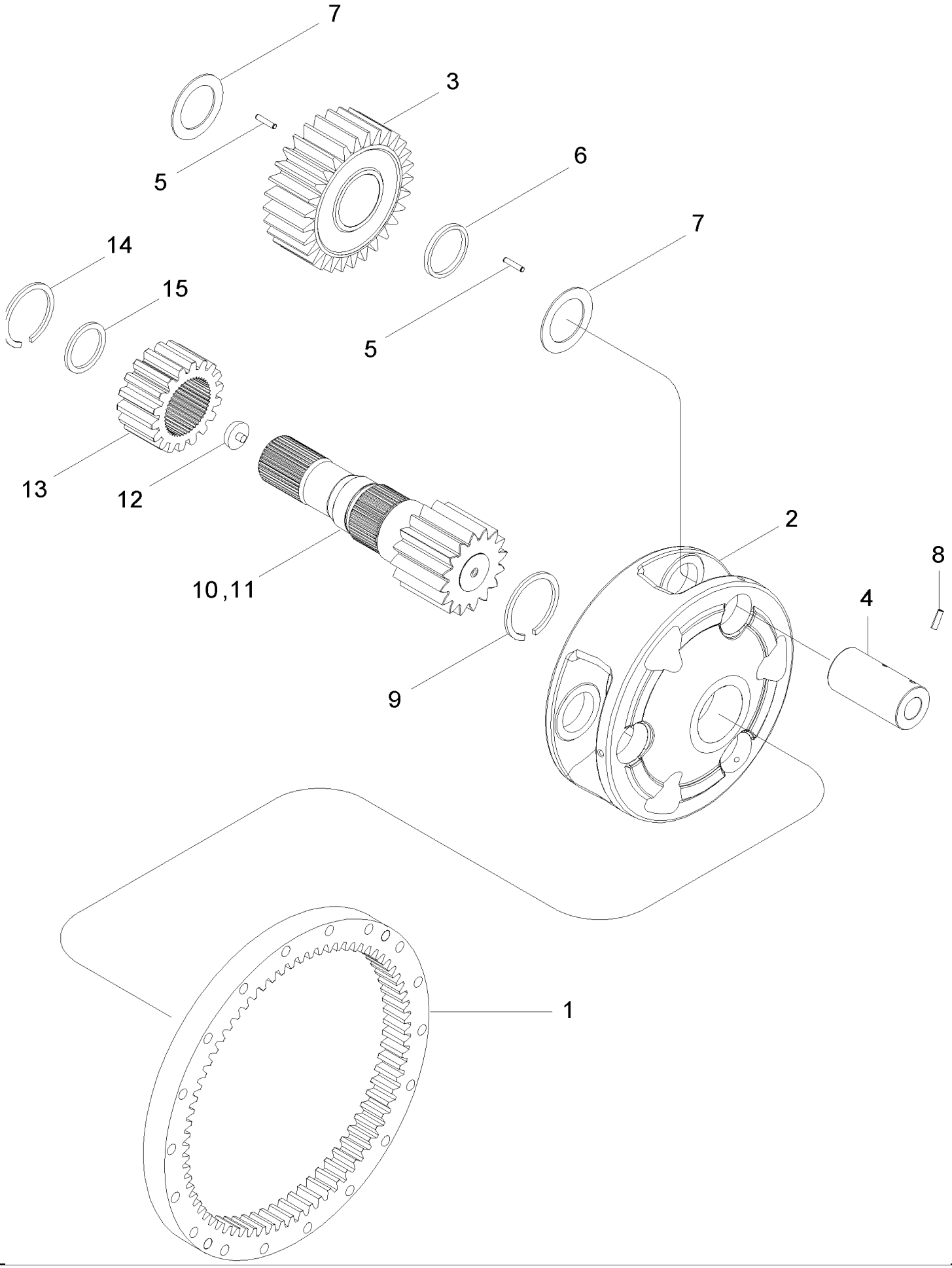
7
3
5
6
7
14
15
5
13
12
10,11
2
8
4
9
1

MX285 CASE IH MAGNUM TRACTOR (NORTH AMERICA)

06-35 REAR AXLE - PLANETARY, MX285

сылка	Номер детали	Кол-во	Описание
1	310695A1	2	GEAR, RING,
2	388366A1	2	CARRIER, GEARS,
3	310694A2	6	GEAR, PLANETARY,
4	310697A3	6	SHAFT,
5	1349347C1	396	BEARING, NEEDLE,
6	310728A2	6	RING, Metal, BSN AJB0228408
6	86985634	6	SPACER, RING, Nylon, ASN AJB0228408
7	385900A1	12	WASHER,
8	838-3826	6	PIN, M8 x 26, Coiled, 8 x 26 mm
9	101-11350	2	RING, SNAP, #350, Ext, No. 350
10	395481A1	1	SHAFT, GEAR, 16T, Left Hand
11	395481A1	1	SHAFT, GEAR, 16T, Right Hand
12	1981327C1	1	PLUG, Sun Shaft Locator, Right Hand Shaft Only
13	1259732C1	2	HUB,
14	101-11275	2	RING, SNAP, #275, 2.594, Ext, No. 275
15	1259753C1	2	WASHER,

MX285 CASE IH MAGNUM TRACTOR (NORTH AMERICA)

06-37 REAR AXLE - 4 X 120 INCH

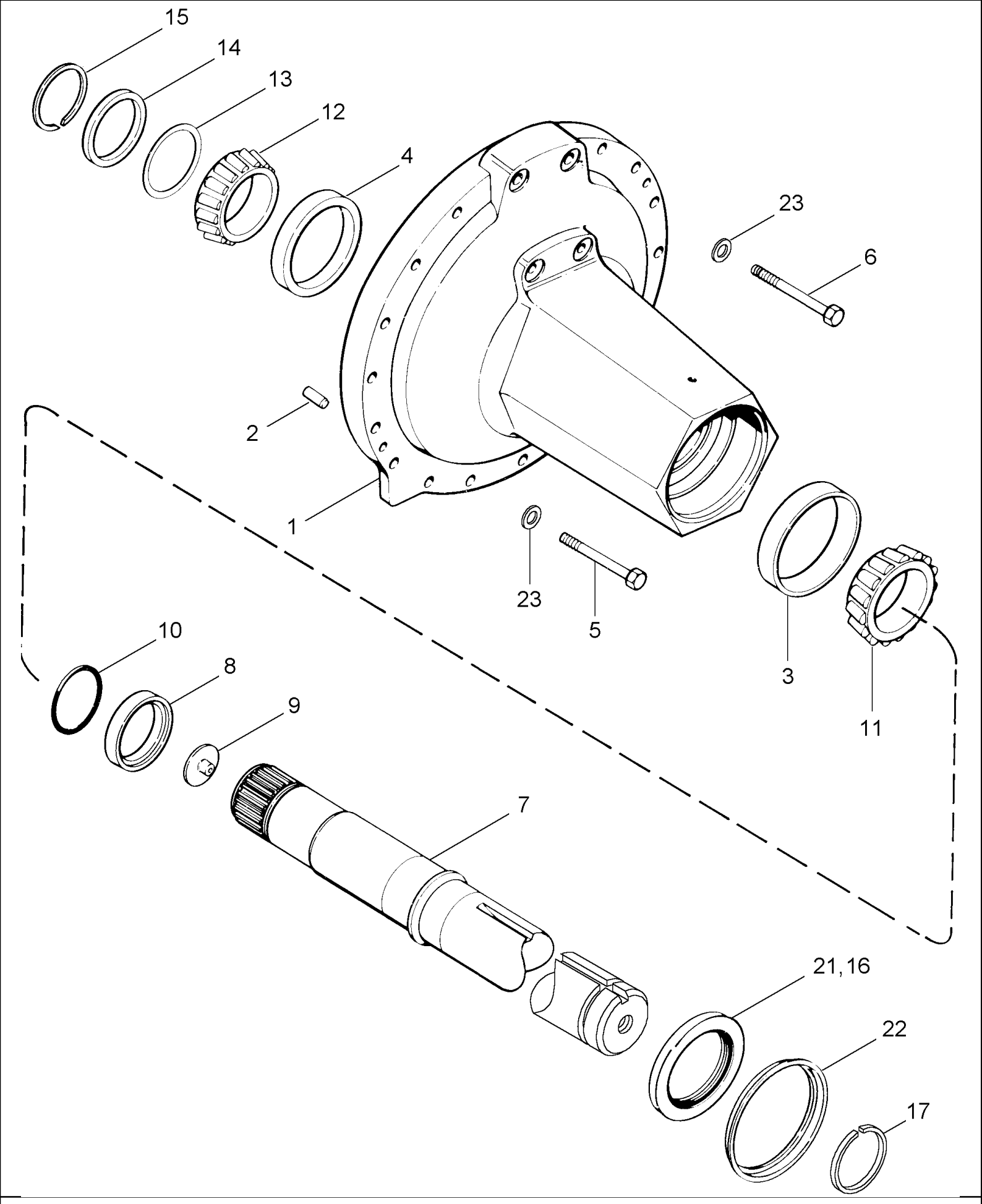

MX285 CASE IH MAGNUM TRACTOR (NORTH AMERICA)

06-37 REAR AXLE - 4 X 120 INCH

ссылка	Номер детали	Кол-во	Описание
1	1342268C1	2	CARRIER, Inc. 2 - 4
2	837-16040	2	DOWEL, M16 x 40, 16 x 40 mm
3	1975500C1	1	BEARING, CUP,
4	619697C1	1	BEARING, CUP,
5	828-16150	32	BOLT, Hex, M16 x 150, 10.9, M16 x 150; 10.9
6	828-16170	4	BOLT, Hex, M16 x 170, 10.9, M16 x 170; 10.9
7	1342484C4	2	AXLE, REAR, Inc. 8, 9
8	1963837C1	1	BUSHING,
9	1981270C1	1	INSERT,
10	238-5155	2	O-RING, -155, 70 Duro, 3.987" ID x .103" Thk,
11	1975499C1	2	BEARING, CONE,
12	1963841C1	2	BEARING, CONE,
13	143921C1	AR	SHIM, 0,760 mm
13	143922C1	AR	SHIM, 0,300 mm
13	143923C1	AR	SHIM, 0,13 mm
13	143924C1	AR	SHIM, 0,10 mm
13	143925C1	AR	SHIM, 0,076 mm
14	124744C1	2	RING,
15	1277020C2	2	RING,
16	1963839C1	2	SEAL,
17	800-51100	2	RING, SNAP, M100, Ext, Hvy, Axle, 100 mm
	1349182C1	2	KIT, GASKET, Inc. 21, 22
21	1349183C1	1	SEAL, OIL, Oversize
22	1349184C1	1	SLEEVE,
23	896-12016	36	WASHER, M17.5 x 30 x 4, HT, 17,5 x 30 x 4 mm

MX285 CASE IH MAGNUM TRACTOR (NORTH AMERICA)

06-38 REAR AXLE - 4-1/2 X 120 INCH

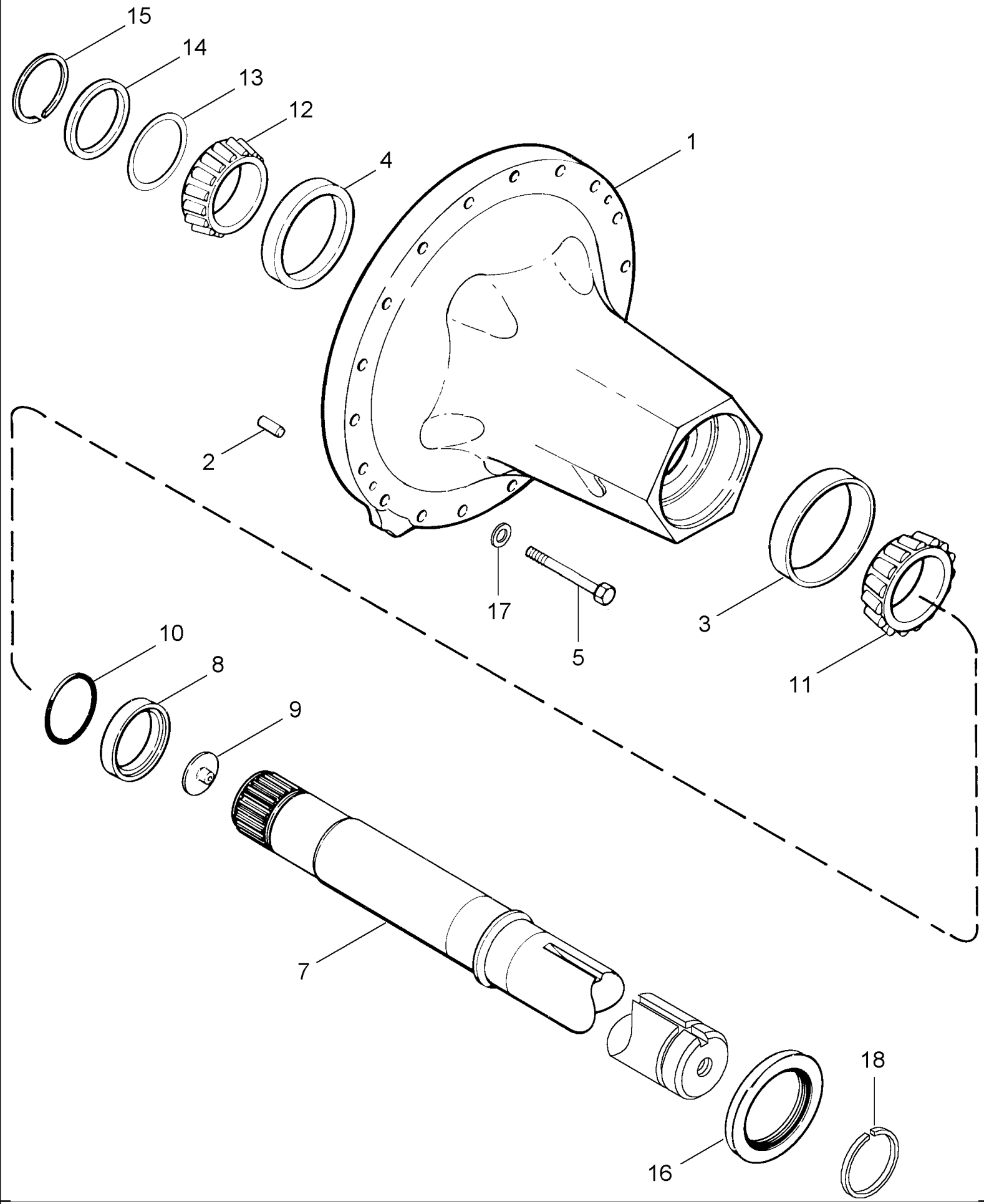

MX285 CASE IH MAGNUM TRACTOR (NORTH AMERICA)

06-38 REAR AXLE - 4-1/2 X 120 INCH

ссылка	Номер детали	Кол-во	Описание
1	245277A1	2	CARRIER, Inc. 2 - 4
2	837-16040	2	DOWEL, M16 x 40, 16 x 40 mm
3	237698A1	1	BEARING, CUP,
4	90-3675T1	1	BEARING SET,
5	828-16150	36	BOLT, Hex, M16 x 150, 10.9, M16 x 150; 10.9
7	245279A1	2	CARRIER, Inc. 8 - 10
8	239529A1	1	BUSHING,
9	1981270C1	1	INSERT,
10	238-5246	2	O-RING, -246, 70 Duro, 4.484" ID x .139" Thk,
11	237700A1	2	BEARING, CONE,
12	90-3676T1	2	BEARING, CONE,
13	143921C1	AR	SHIM, 0,760 mm
13	143922C1	AR	SHIM, 0,300 mm
13	143923C1	AR	SHIM, 0,13 mm
13	143924C1	AR	SHIM, 0,10 mm
13	143925C1	AR	SHIM, 0,076 mm
14	124744C1	2	RING,
15	243856A1	2	SNAP RING,
16	239942A3	2	SEAL,
17	896-12016	36	WASHER, M17.5 x 30 x 4, HT, 17,5 x 30 x 4 mm
18	800-11115	2	RING, SNAP, M115, Ext, Axle, 115 mm

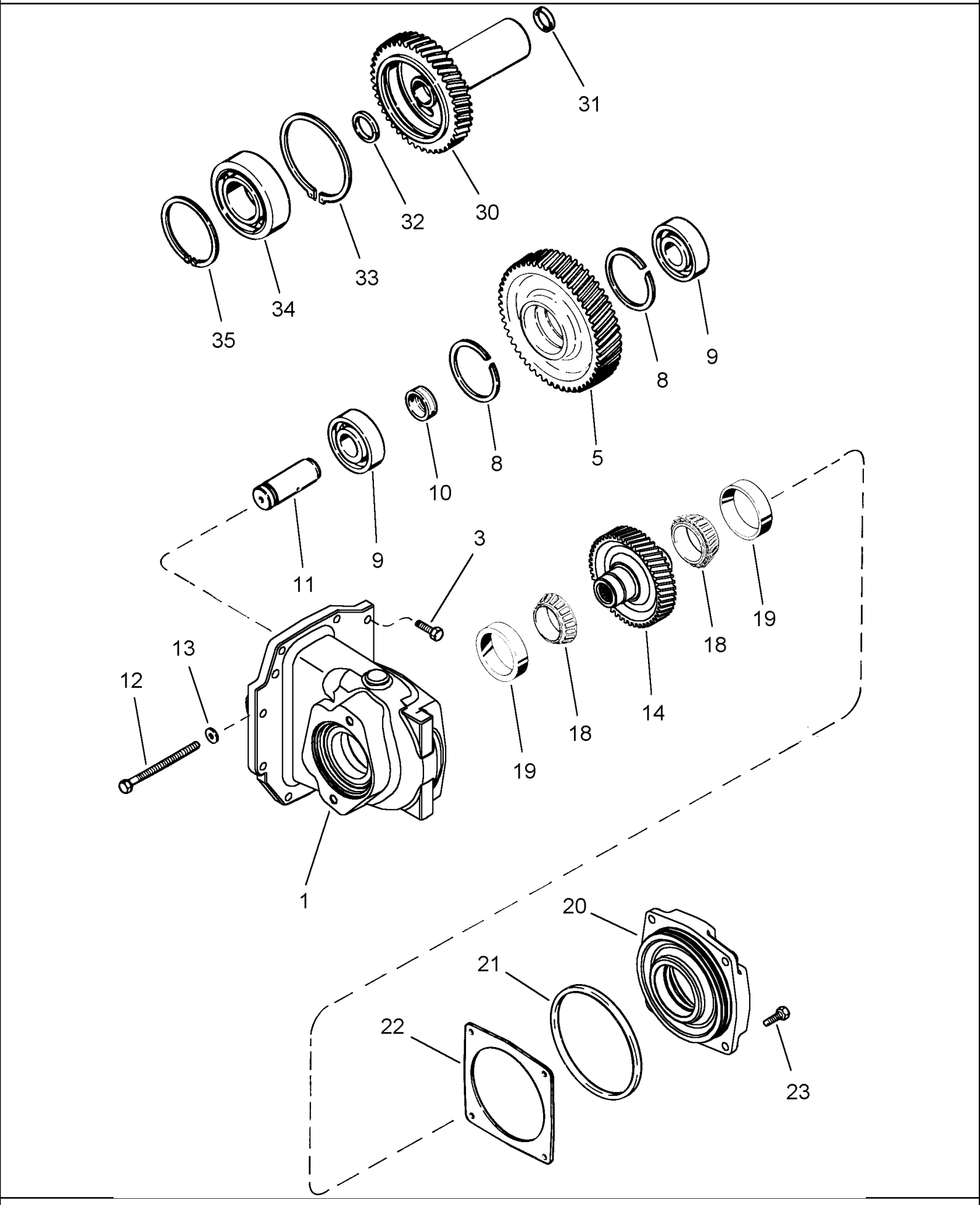
31
30
32
33
34
35
9
8
5
8
10
9
11
3
19
18
14
18
19
13
12
1
20
21
22
23

MX285 CASE IH MAGNUM TRACTOR (NORTH AMERICA)

06-39 TRANSMISSION - PUMP DRIVE

ссылка	Номер детали	Кол-во	Описание
1	389550A1	1	HOUSING,
3	613-10035	8	BOLT, Hex, M10 x 35, 8.8, Full Thd, M10 x 35
5	220199A1	1	PINION,
8	472163R1	2	RING,
9	394326A1	2	BEARING, BALL,
10	93316C1	1	SPACER,
11	1286151C1	1	SHAFT,
12	813-10130	1	BOLT, Hex, M10 x 130, 8.8, M10 x 130
13	896-12010	1	WASHER, M10 x 21.5 x 2.5, HT, 11 x 21 x 2,5 mm
14	404173A1	1	GEAR, DRIVEN,
18	399933C91	2	BEARING, CONE,
19	399934C1	2	BEARING, CUP,
20	405664A2	1	CAGE,
21	238-5257	1	O-RING, -257, 70 Duro, 5.859" ID x .139" Thk,
22	120946C1	AR	SHIM, 0,08 mm
22	120947C1	AR	SHIM, 0,10 mm
22	120948C1	AR	SHIM, 0,13 mm
22	120949C1	AR	SHIM, 0,30 mm
22	149011C1	AR	SHIM, 0,76 mm
23	613-10035	4	BOLT, Hex, M10 x 35, 8.8, Full Thd, M10 x 35
30	220560A1	1	PINION,
31	238-5223	1	O-RING, -223, 70 Duro, 1.609" ID x .139" Thk,
32	1286023C1	1	RING,
33	100-11237	1	RING, SNAP, #237, Ext,
34	ST269A	1	BEARING, BALL,
35	101-21433	1	RING, SNAP, #433, 4.641", Int, No. 433

MX285 CASE IH MAGNUM TRACTOR (NORTH AMERICA)

06-40 POWER TAKE OFF ASSEMBLY - INPUT SHAFT, BSN AJB0356850

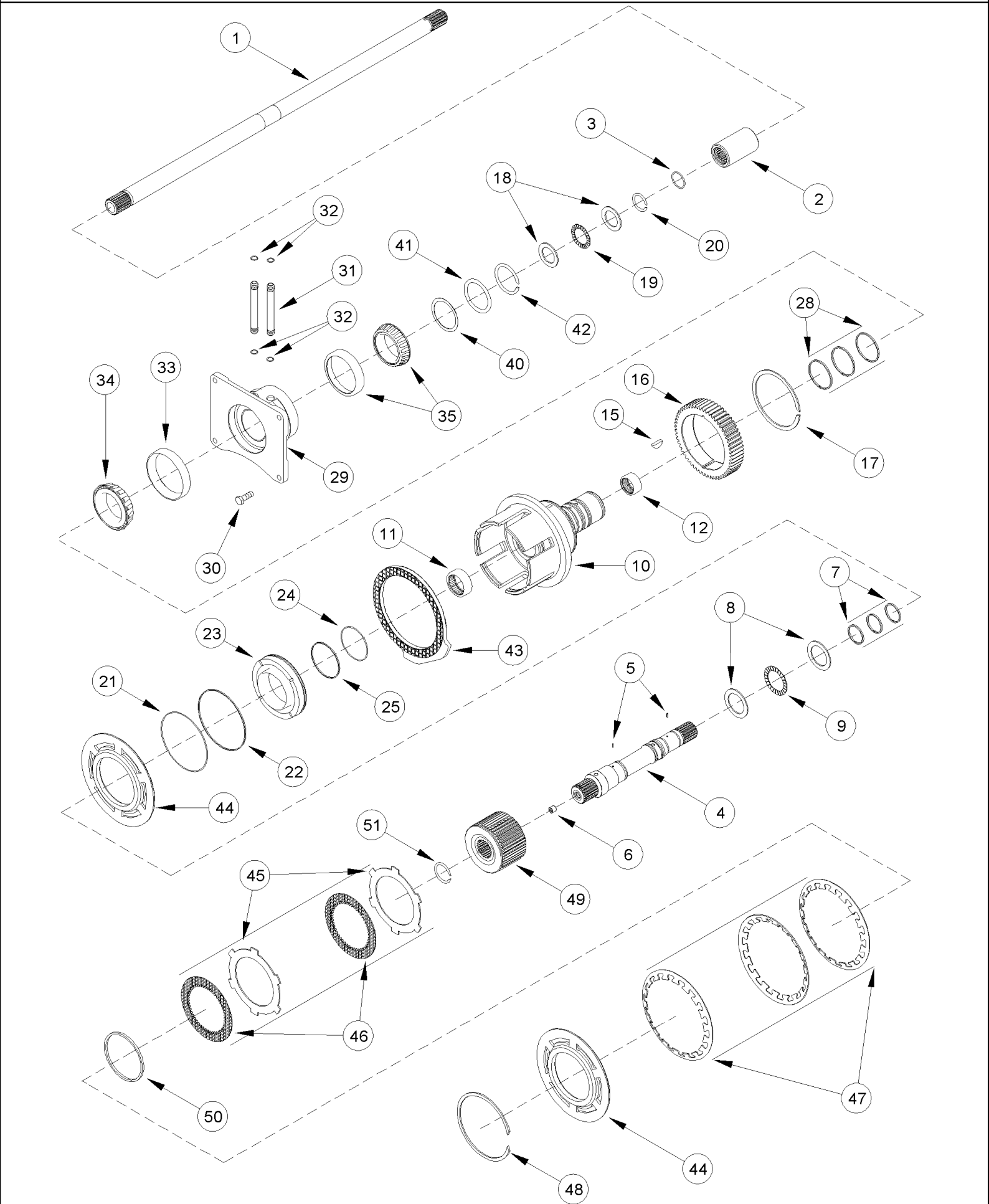

MX285 CASE IH MAGNUM TRACTOR (NORTH AMERICA)

06-40 POWER TAKE OFF ASSEMBLY - INPUT SHAFT, BSN AJB0356850

сылка	Номер детали	Кол-во	Описание
1	198496A1	1	COUNTERSHAFT,
2	231241A1	1	COUPLING, SPLINED,
3	238-6124	1	O-RING, -124, 90 Duro, 1.237" ID x .103" Thk,
4	225800A2	1	SHAFT, Inc. 5
5	38-3605	2	PIN, 3/32" x 5/16", Coiled, 3/32" x 5/16", Coiled
6	877-31212	1	SET SCREW, Hex Soc, M12 x 12, Flat Pt, M12 x 12
7	225802A1	3	SEAL,
8	A54021	2	WASHER, Thrust, 1-3/4 x 2-1/2 x 3/32 inch (44 x 64 x 2 mm)
9	A54022	1	BEARING,
10	323734A1	1	CARRIER, Inc. 11, 12
11	R21491	1	BEARING,
12	38834	1	BEARING,
15	126-124	1	WOODRUFF KEY, #15, 1/4" x 1", HT,
16	221203A1	1	PINION, Gear 57T
17	101-11475	1	RING, SNAP, #475, 4.495, Ext, No. 475
18	1327732C1	2	WASHER, 1-13/32 x 2 x 3/32 inch
19	607146R91	1	BEARING,
20	1259828C1	1	RING,
21	1286083C1	1	O-RING,
22	1286079C1	1	RING,
23	230166A1	1	PISTON,
24	1286081C1	1	O-RING,
25	1286077C1	1	RING,
28	1286026C1	3	RING,
29	254105A1	1	CAGE,
30	628-10030	4	BOLT, Hex, M10 x 30, 10.9, Full Thd, M10 x 30; 10.9
31	413665A1	2	TUBE,
32	238-5013	4	O-RING, -013, 70 Duro, .426" ID x .070" Thk,
33	630694C1	1	BEARING, CONE,
34	630695C1	1	BEARING, CUP,
35	225805A1	1	BEARING, ROLLER,
	253458A1	1	KIT, SHIM, Inc. 40
40	249528A1	1	SHIM, 0,203 mm
40	199929A1	1	SHIM, 0,356 mm
40	199928A1	1	SHIM, 0,508 mm
40	199927A1	1	SHIM, 0,559 mm
40	222675A1	1	SHIM, 0,635 mm
41	199923A1	1	SPACER,
42	357194R1	1	RING,
43	325666A1	1	BRAKE DISC,
44	239718A2	2	PLATE,
45	128114A1	10	DISC,
46	1997907C1	10	PLATE, Friction
47	225801A1	9	WASHER, SPECIAL,
48	1285996C1	1	RING, SNAP,

MX285 CASE IH MAGNUM TRACTOR (NORTH AMERICA)

06-40 POWER TAKE OFF ASSEMBLY - INPUT SHAFT, BSN AJB0356850

ссылка	Номер детали	Кол-во	Описание
49	221209A1	1	HOUSING, CLUTCH,
50	1286052C1	1	RING,
51	555570R1	1	RING, SNAP,

MX285 CASE IH MAGNUM TRACTOR (NORTH AMERICA)

06-41 POWER TAKE OFF ASSEMBLY - INPUT SHAFT, ASN AJB0356850

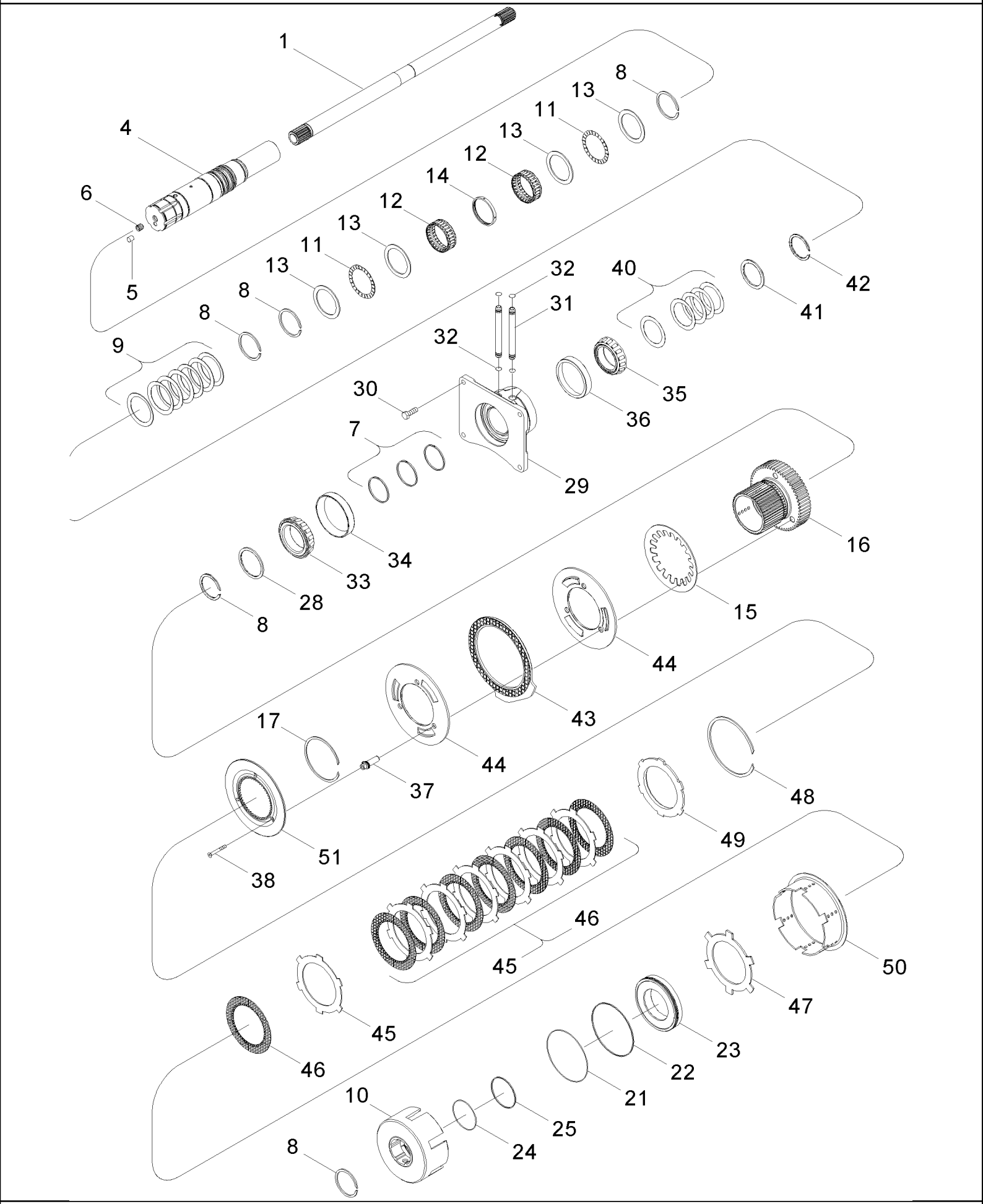

MX285 CASE IH MAGNUM TRACTOR (NORTH AMERICA)

06-41 POWER TAKE OFF ASSEMBLY - INPUT SHAFT, ASN AJB0356850

ссылка	Номер детали	Кол-во	Описание
1	198496A1	1	COUNTERSHAFT,
4	435388A3	1	SHAFT, Inc. 5, 6
5	1342851C1	1	PLUG, 10 mm
6	877-31212	1	SET SCREW, Hex Soc, M12 x 12, Flat Pt, M12 x 12
7	1286026C1	3	RING, Seal
8	93350C1	5	RING, Retaining
9	1286012C2	1	WASHER, Belleville
10	446596A4	1	CARRIER,
11	572182R1	2	BEARING, THRUST,
12	435716A1	2	BEARING, NEEDLE,
13	1286043C1	4	WASHER, THRUST,
14	86989332	1	RING, Needle Bearing Support
15	435636A1	1	SPRING, Brake Apply Disc
16	446598A4	1	GEAR, Gear 57T, 42T
17	101-11400	1	RING, SNAP, #400, 3.771, Ext, No. 400
21	1286083C1	1	O-RING,
22	1286079C1	1	RING,
23	446597A2	1	PISTON,
24	1286081C1	1	O-RING,
25	1286076C1	1	RING,
28	1277309C1	1	WASHER,
29	436252A1	1	CAGE,
30	628-10030	4	BOLT, Hex, M10 x 30, 10.9, Full Thd, M10 x 30; 10.9
31	413665A1	2	TUBE,
32	238-5013	4	O-RING, -013, 70 Duro, .426" ID x .070" Thk,
33	630694C1	1	BEARING, CONE,
34	630695C1	1	BEARING, CUP,
35	659458R1	1	BEARING, CONE,
36	105497H	1	BEARING, CUP,
37	435718A3	3	ADJUSTER, Pin, Brake
38	87427330	3	SCREW, M6 x 50, with Loctite
	446943A1	1	SHIM, Inc. 40
40	249776A1	1	SHIM, 0,203 mm
40	249777A1	1	SHIM, 0,356 mm
40	249778A1	1	SHIM, 0,508 mm
40	249779A1	1	SHIM, 0,559 mm
40	249780A1	1	SHIM, 0,635 mm
41	87427329	1	SPACER,
42	375374R1	1	RING,
43	435892A2	1	BRAKE DISC,
44	435393A1	2	PLATE,
45	128114A1	7	DISC,
46	1997907C1	8	PLATE, Friction
47	435389A1	1	DISC,
48	1285996C1	1	RING, SNAP,

ссылка	Номер детали	Кол-во	Описание
49	1342645C3	1	DISC, CLUTCH,
50	86989330	1	TUBE, Brake Pusher
51	86989331	1	BRAKE DISC, Pusher

06-42 POWER TAKE OFF ASSEMBLY - REDUCTION GEAR, DUAL SPEED

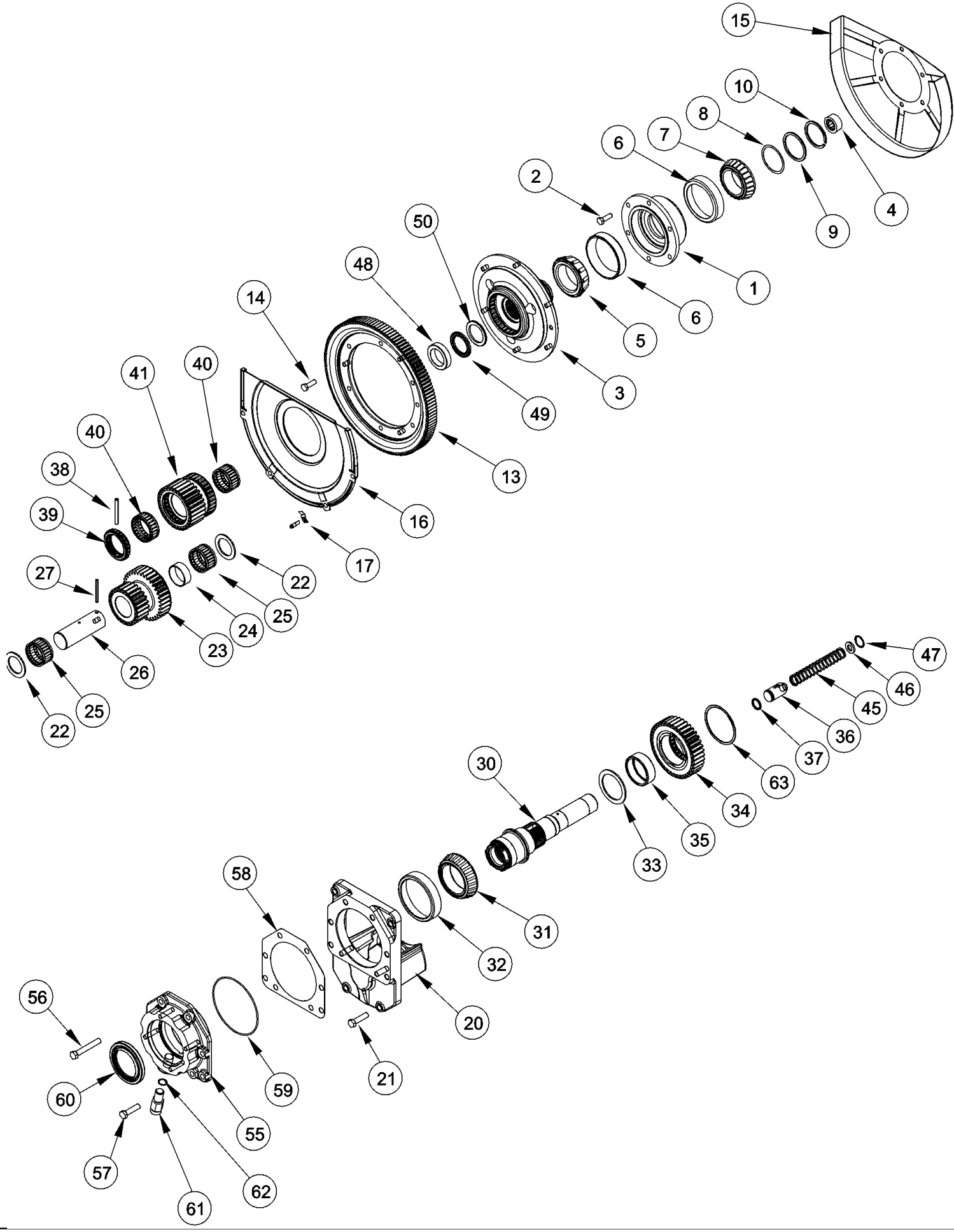

MX285 CASE IH MAGNUM TRACTOR (NORTH AMERICA)

06-42 POWER TAKE OFF ASSEMBLY - REDUCTION GEAR, DUAL SPEED

ссылка	Номер детали	Кол-во	Описание
1	225806A1	1	CAGE,
2	628-10030	6	BOLT, Hex, M10 x 30, 10.9, Full Thd, M10 x 30; 10.9
3	277389A2	1	HUB ASSY., Inc. 4
4	R21491	1	BEARING,
5	435536A1	1	BEARING, CONE,
6	435535A1	2	BEARING, CUP,
7	235545A1	1	BEARING, CONE,
	253456A1	1	SHIM, Inc. 8
8	373471A1	1	SHIM, 0,152 mm
8	373474A1	1	SHIM, 0,178 mm
8	249529A1	1	SHIM, 0,203 mm
8	231773A1	1	SHIM, 0,356 mm
8	231778A1	1	SHIM, 0,635 mm
9	231772A1	1	SPACER,
10	231760A1	1	RING, SNAP,
13	226950A4	1	RING,
14	628-10030	6	BOLT, Hex, M10 x 30, 10.9, Full Thd, M10 x 30; 10.9
15	198709A1	1	PROTECTION PLATE,
16	225810A1	1	COVER,
17	139327C1	4	CLIP,
20	226037A4	1	COVER,
21	828-12045	4	BOLT, Hex, M12 x 45, 10.9, Full Thd, M12 x 45; 10.9
22	226035A1	2	WASHER,
23	226033A3	1	PINION,
24	300084A1	1	SPACER,
25	138763C91	2	BEARING, NEEDLE,
26	226034A2	1	SHAFT,
27	38-21240	1	PIN, 3/16" x 2 1/2", Coiled, 3/16" x 2 1/2", Coiled
30	324000A1	1	SHAFT, GEAR,
31	A67328	1	BEARING, CONE,
32	A67327	1	BEARING, CUP,
33	226024A3	1	WASHER, THRUST,
34	326733A1	1	PINION,
35	318641A1	1	BEARING, NEEDLE,
36	226028A2	1	PISTON,
37	226029A1	1	RING,
38	38-32044	1	PIN, 5/16" x 2 3/4", Coiled, 5/16" x 2 3/4", Coiled
39	226031A2	1	COLLAR,
40	330162A1	2	BEARING, NEEDLE,
41	326731A1	1	GEAR,
45	323066A1	1	SPRING,
46	295066A1	1	WASHER,
47	100-21112	1	RING, SNAP, 1.125", Int, #112,
48	327172A1	1	SPACER,
49	243544A1	1	BEARING, NEEDLE,

MX285 CASE IH MAGNUM TRACTOR (NORTH AMERICA)

06-42 POWER TAKE OFF ASSEMBLY - REDUCTION GEAR, DUAL SPEED

ссылка	Номер детали	Кол-во	Описание
50	327372A1	1	WASHER,
55	241384A3	1	HOUSING, BEARING,
56	828-12080	6	BOLT, Hex, M12 x 80, 10.9, M12 x 80; 10.9
57	828-12045	2	BOLT, Hex, M12 x 45, 10.9, Full Thd, M12 x 45; 10.9
	253460A1	1	SHIM, Inc. 58
58	249530A1	1	SHIM, 0,203 mm
58	241383A1	1	SHIM, 0,356 mm
58	241380A1	1	SHIM, 0,508 mm
58	241381A1	1	SHIM, 0,559 mm
58	241382A1	1	SHIM, 0,635 mm
59	638-54145	1	O-RING, Cl 5, 145MM ID x 3.55 Thk, 145 ID x 3,55 mm
60	293053A1	1	SEAL, OIL,
61	A186004	1	SENSOR,
62	238-5115	1	O-RING, -115, 70 Duro, .674" ID x .103" Thk,
63	102-22318	1	RING, SNAP, #318, 3.311, Int, Spiral, No. 318

06-43 POWER TAKE OFF ASSEMBLY - OUTPUT SHAFT, DUAL SPEED

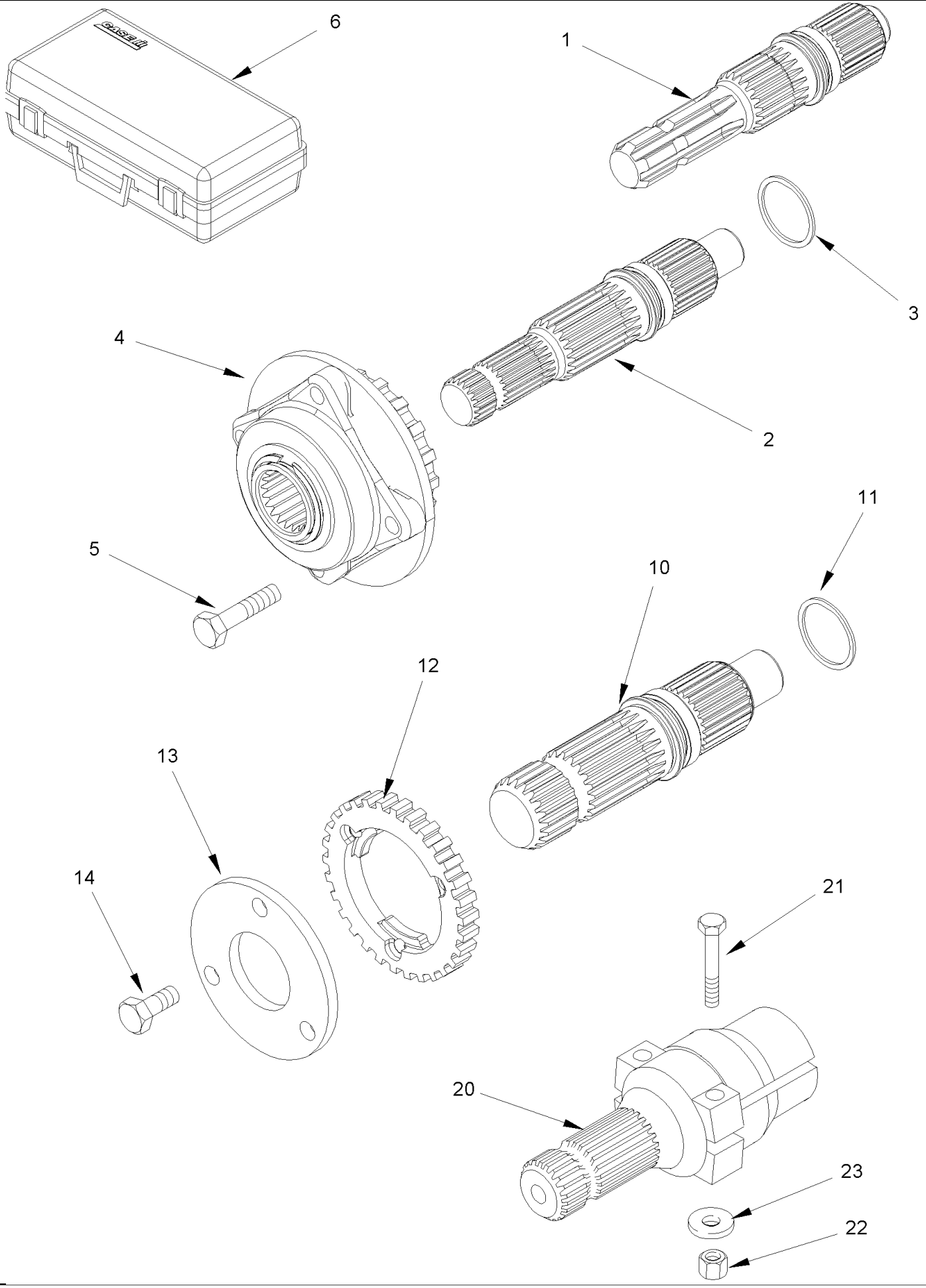

MX285 CASE IH MAGNUM TRACTOR (NORTH AMERICA)

06-43 POWER TAKE OFF ASSEMBLY - OUTPUT SHAFT, DUAL SPEED

сылка	Номер детали	Кол-во	Описание
1	226045A2	1	SHAFT, DRIVE, RPM 540, 35 mm (1-3/8 in)
2	226042A2	1	SHAFT, DRIVE, RPM 1000, 35 mm (1-3/8 in)
3	341418A2	1	SEAL,
4	241387A5	1	HOUSING,
5	614-10040	4	BOLT, Hex, M10 x 40, 8.8, Full Thd, M10 x 40
6	258531A1	1	BOX,
10	226040A2	1	SHAFT, DRIVE, RPM 1000, 45 mm (1-3/4 in)
11	341418A2	1	SEAL,
12	241385A3	1	PLATE, Inner
13	241386A2	1	PLATE, Outer
14	628-10020	3	BOLT, Hex, M10 x 20, 10.9, Full Thd, M10 x 20; 10,9
20	A151928	1	SHAFT, DRIVE, RPM 1000
21	413-844	2	BOLT, Hex, 1/2"-13 x 2 3/4", G5, 1/2 x 2-3/4
22	131-510	2	NUT, LOCK, 1/2"-13, 1/2, Lock
23	A30061	2	WASHER,

06-44 POWER TAKE OFF ASSEMBLY - OUTPUT SHAFT, SINGLE SPEED, BSN AJB0356850

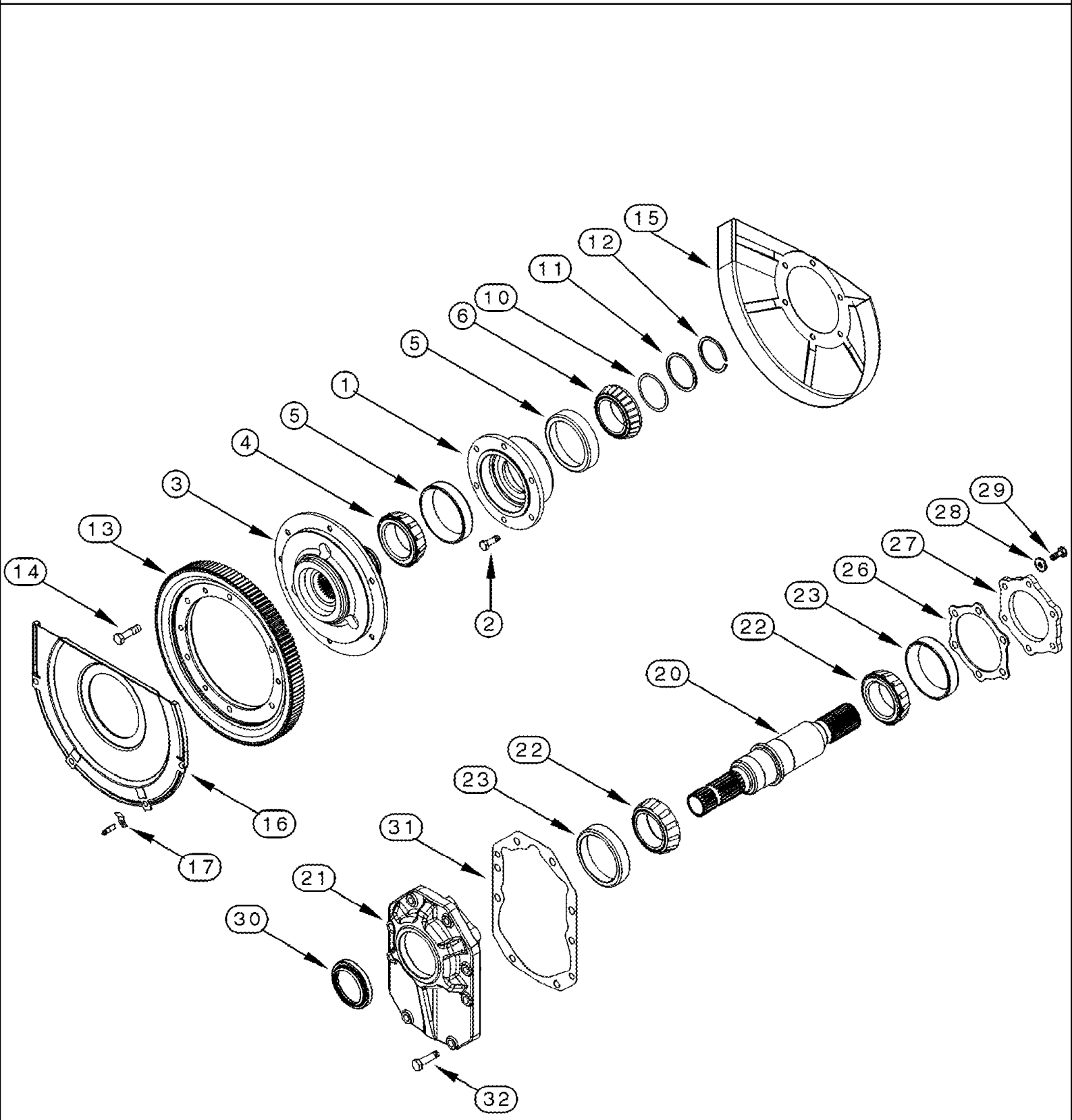

MX285 CASE IH MAGNUM TRACTOR (NORTH AMERICA)

06-44 POWER TAKE OFF ASSEMBLY - OUTPUT SHAFT, SINGLE SPEED, BSN AJB0356850

ссылка	Номер детали	Кол-во	Описание
1	225806A1	1	CAGE,
2	628-10030	6	BOLT, Hex, M10 x 30, 10.9, Full Thd, M10 x 30; 10.9
3	277389A2	1	HUB ASSY.,
4	435536A1	1	BEARING, CONE,
5	435535A1	2	BEARING, CUP,
6	235545A1	1	BEARING, CONE,
	253456A1	1	SHIM, Inc. 10
10	373471A1	1	SHIM, 0,152 mm
10	373474A1	1	SHIM, 0.178 mm
10	249529A1	1	SHIM, 0,203 mm
10	231773A1	1	SHIM, 0,356 mm
10	231777A1	1	SHIM, 0,559 mm
10	231778A1	1	SHIM, 0,635 mm
11	231772A1	1	SPACER,
12	231760A1	1	RING, SNAP,
13	226950A4	1	RING,
14	628-10030	6	BOLT, Hex, M10 x 30, 10.9, Full Thd, M10 x 30; 10.9
15	198709A1	1	PROTECTION PLATE,
16	225810A1	1	COVER,
17	139327C1	4	CLIP,
20	225812A1	1	SHAFT, 45 mm (1-3/4 in)
21	243946A4	1	COVER,
22	435536A1	2	BEARING, CONE,
23	435535A1	2	BEARING, CUP,
	253459A4	1	KIT, SHIM, Inc. 26
26	380164A1	1	SHIM, 0,152 mm
26	380165A1	1	SHIM, 0,178 mm
26	249532A4	1	SHIM, 0,203 mm
26	243949A4	1	SHIM, 0,356 mm
26	243952A4	1	SHIM, 0,635 mm
27	305751A1	1	PLATE,
28	896-12012	6	WASHER, M12 x 24.5 x 3, HT, 13,5 x 24 x 3 mm
29	627-12080	6	BOLT, Hex, M12 x 80, 10.9, Full Thd, M12 x 80; 10.9
30	225820A1	1	SEAL, OIL,
31	228256A1	1	GASKET,
32	828-12045	8	BOLT, Hex, M12 x 45, 10.9, Full Thd, M12 x 45; 10.9

MX285 CASE IH MAGNUM TRACTOR (NORTH AMERICA)

06-45 POWER TAKE OFF ASSEMBLY - OUTPUT SHAFT, SINGLE SPEED - ASN AJB0356850

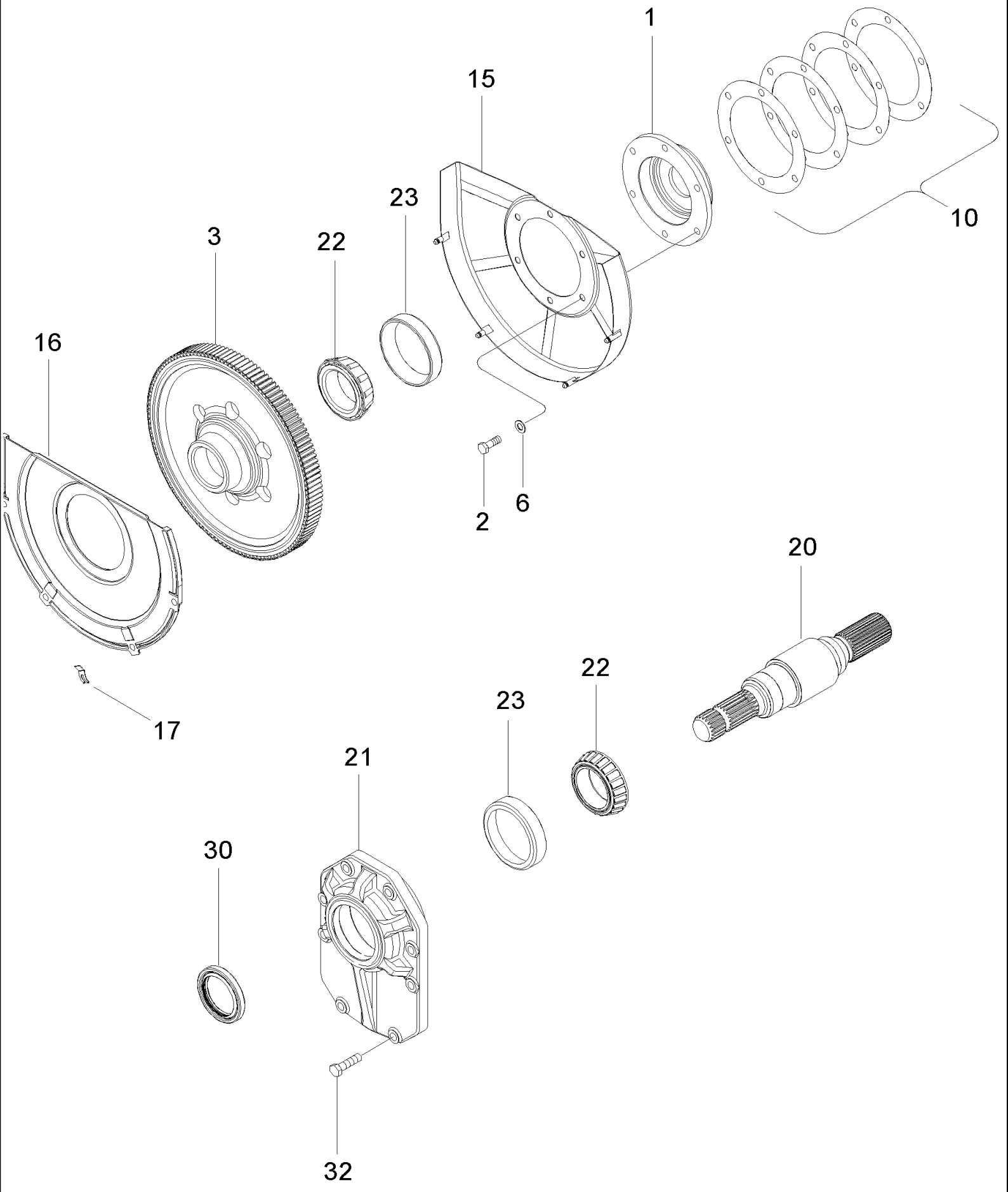

MX285 CASE IH MAGNUM TRACTOR (NORTH AMERICA)

06-45 POWER TAKE OFF ASSEMBLY - OUTPUT SHAFT, SINGLE SPEED - ASN AJB0356850

сылка	Номер детали	Кол-во	Описание
1	444803A2	1	CAGE,
2	628-10030	6	BOLT, Hex, M10 x 30, 10.9, Full Thd, M10 x 30; 10.9
3	444799A2	1	RING, FLYWHEEL, 125T
6	895-11010	6	WASHER, M10 x 20 x 2, 11 x 20 x 2 mm
	445991A1	1	KIT, SHIM, Inc. 10
10	444805A1	1	SHIM, 0,152 mm
10	444806A1	1	SHIM, 0.178 mm
10	444807A1	1	SHIM, 0,203 mm
10	444809A1	1	SHIM, 0,635 mm
15	446759A1	1	SHIELD,
16	225810A1	1	COVER,
17	139327C1	4	CLIP,
20	444798A2	1	SHAFT, 45 mm (1-3/4 in)
21	444801A1	1	COVER,
22	446268A1	2	BEARING, CONE,
23	446269A1	2	BEARING, CUP,
30	225820A1	1	SEAL, OIL,
32	828-12045	8	BOLT, Hex, M12 x 45, 10.9, Full Thd, M12 x 45; 10.9

06-46 POWER TAKE OFF ASSEMBLY - OUTPUT SHAFT, SINGLE SPEED INTERCHANGEABLE SHAFT

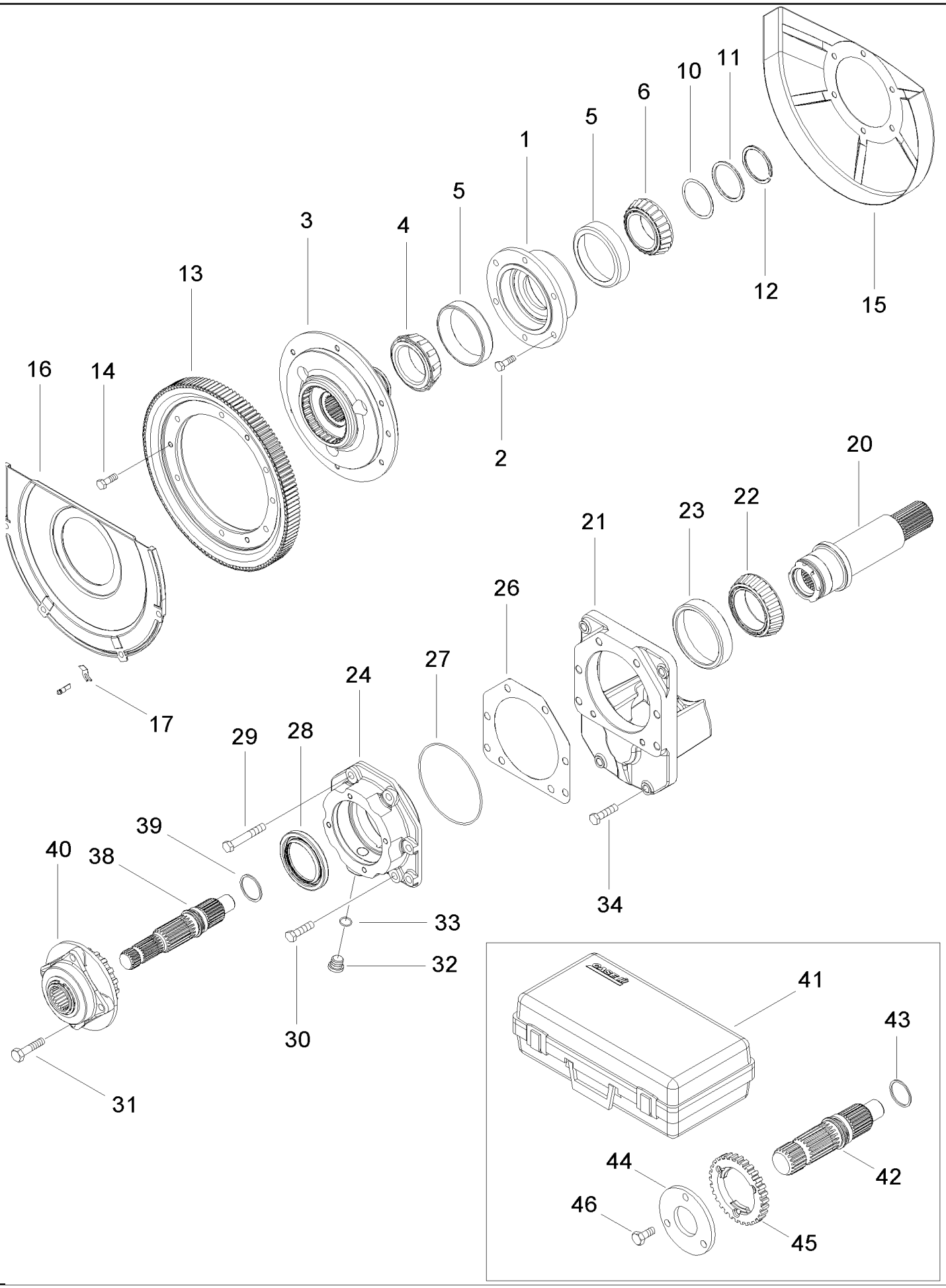

MX285 CASE IH MAGNUM TRACTOR (NORTH AMERICA)

06-46 POWER TAKE OFF ASSEMBLY - OUTPUT SHAFT, SINGLE SPEED INTERCHANGEABLE SHAFT

ссылка	Номер детали	Кол-во	Описание
1	225806A1	1	CAGE,
2	628-10030	6	BOLT, Hex, M10 x 30, 10.9, Full Thd, M10 x 30; 10.9
3	277389A2	1	HUB ASSY.,
4	435536A1	1	BEARING, CONE,
5	435535A1	2	BEARING, CUP,
6	235545A1	1	BEARING, CONE,
	253456A1	1	SHIM, Inc. 10
10	373471A1	1	SHIM, 0,152 mm
10	373474A1	1	SHIM, 0,178 mm
10	249529A1	1	SHIM, 0,203 mm
10	231773A1	1	SHIM, 0,356 mm
10	231778A1	1	SHIM, 0,635 mm
11	231772A1	1	SPACER,
12	231760A1	1	RING, SNAP,
13	226950A4	1	RING,
14	628-10030	6	BOLT, Hex, M10 x 30, 10.9, Full Thd, M10 x 30; 10.9
15	198709A1	1	PROTECTION PLATE,
16	225810A1	1	COVER,
17	139327C1	4	CLIP,
20	431027A1	1	SHAFT, PTO,
21	226037A4	1	COVER,
22	A67328	1	BEARING, CONE,
23	A67327	1	BEARING, CUP,
24	241384A3	1	HOUSING, BEARING,
	253460A1	1	SHIM, Inc. 26
26	249530A1	1	SHIM, 0,203 mm
26	241383A1	1	SHIM, 0,356 mm
26	241380A1	1	SHIM, 0,508 mm
26	241381A1	1	SHIM, 0,559 mm
26	241382A1	1	SHIM, 0,635 mm
27	638-54145	1	O-RING, CI 5, 145MM ID x 3.55 Thk, 145 ID x 3,55 mm
28	293053A1	1	SEAL, OIL,
29	828-12080	6	BOLT, Hex, M12 x 80, 10.9, M12 x 80; 10.9
30	828-12045	2	BOLT, Hex, M12 x 45, 10.9, Full Thd, M12 x 45; 10.9
31	614-10040	4	BOLT, Hex, M10 x 40, 8.8, Full Thd, M10 x 40
32	431888A1	1	PLUG, Inc. 33
33	637-63173	1	O-RING, CI 5, 17.3MM ID x 2.2 Thk, 17,3 ID x 2,2 mm
34	828-12045	4	BOLT, Hex, M12 x 45, 10.9, Full Thd, M12 x 45; 10.9
38	226042A2	1	SHAFT, DRIVE, 35 mm (1-3/8 in)
39	341418A2	1	SEAL,
40	241387A5	1	HOUSING,
41	258531A1	1	BOX,
42	226040A2	1	SHAFT, DRIVE, 45 mm (1-3/4 in)
43	341418A2	1	SEAL,
44	241386A2	1	PLATE,

06-46 POWER TAKE OFF ASSEMBLY - OUTPUT SHAFT, SINGLE SPEED INTERCHANGEABLE SHAFT

сылка	Номер детали	Кол-во	Описание
45	241385A3	1	PLATE,
46	628-10020	3	BOLT, Hex, M10 x 20, 10.9, Full Thd, M10 x 20; 10.9

06-47 POWER TAKE OFF ASSEMBLY - OUTPUT SHAFT, SINGLE SPEED REVERSIBLE SHAFT

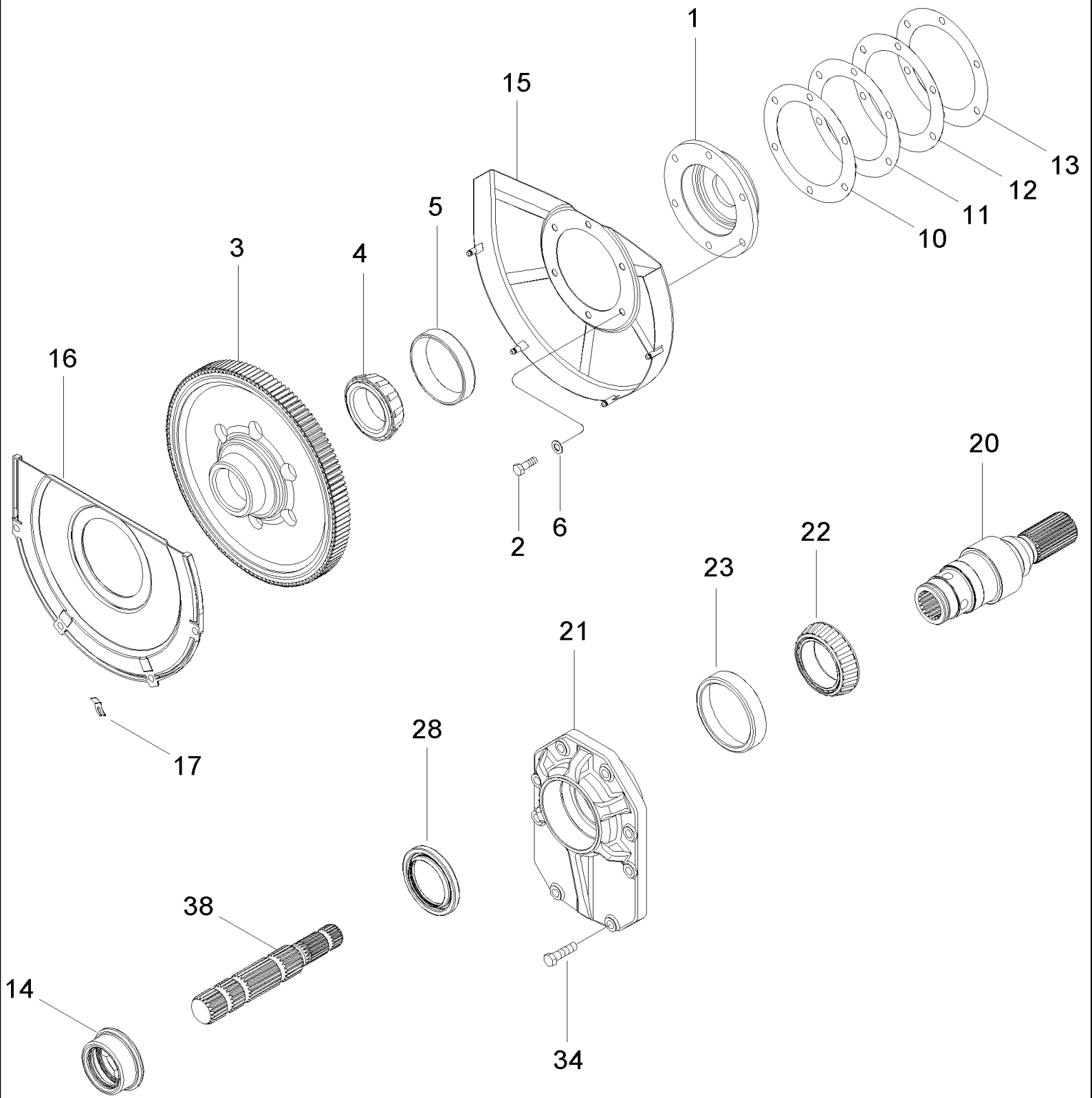

MX285 CASE IH MAGNUM TRACTOR (NORTH AMERICA)

06-47 POWER TAKE OFF ASSEMBLY - OUTPUT SHAFT, SINGLE SPEED REVERSIBLE SHAFT

сылка	Номер детали	Кол-во	Описание
1	444803A2	1	CAGE,
2	628-10030	6	BOLT, Hex, M10 x 30, 10.9, Full Thd, M10 x 30; 10.9
3	444799A2	1	RING, FLYWHEEL,
4	446268A1	1	BEARING, CONE,
5	446269A1	1	BEARING, CUP,
6	895-11010	6	WASHER, M10 x 20 x 2, 11 x 20 x 2 mm
	445991A1	1	KIT, SHIM, Inc. 10 - 13
10	444805A1	1	SHIM, 0,152 mm
11	444806A1	1	SHIM, 0,178 mm
12	444807A1	1	SHIM, 0,203 mm
13	444809A1	1	SHIM, 0,635 mm
14	87413197	1	COUPLING, QUICK, FEMALE,
15	446759A1	1	SHIELD,
16	225810A1	1	COVER,
17	139327C1	4	CLIP,
20	448084A2	1	SLEEVE, TRANSMISSION,
21	448082A1	1	COVER,
22	A67328	1	BEARING, CONE,
23	A67327	1	BEARING, CUP,
28	293053A1	1	SEAL, OIL,
34	828-12045	8	BOLT, Hex, M12 x 45, 10.9, Full Thd, M12 x 45; 10.9
38	448085A1	1	SHAFT, 35 mm (1-3/8 in)

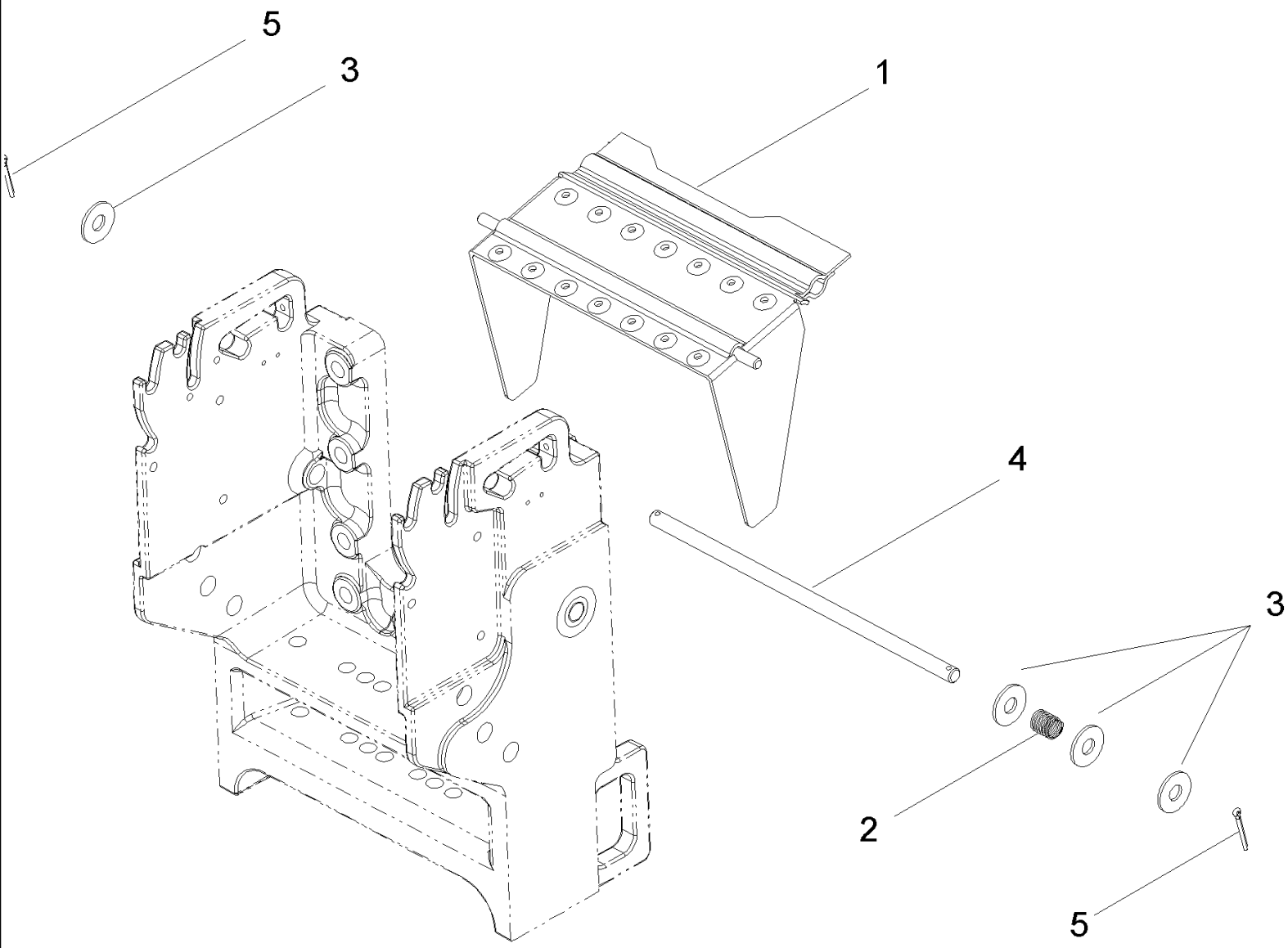
5
3
1
4
3
2
5

MX285 CASE IH MAGNUM TRACTOR (NORTH AMERICA)

06-48 POWER TAKE OFF ASSEMBLY - SHIELDS

ссылка	Номер детали	Кол-во	Описание
1	379252A2	1	SHIELD,
2	179657A2	1	SPRING,
3	495-21069	4	WASHER, 5/8", 11/16 x 1-3/4 x 9/64
4	225672A2	1	ROD,
5	733-5040	2	PIN, SPLIT (COTTER), M5 x 40,

06-49 SOLID STEEL REAR WHEELS

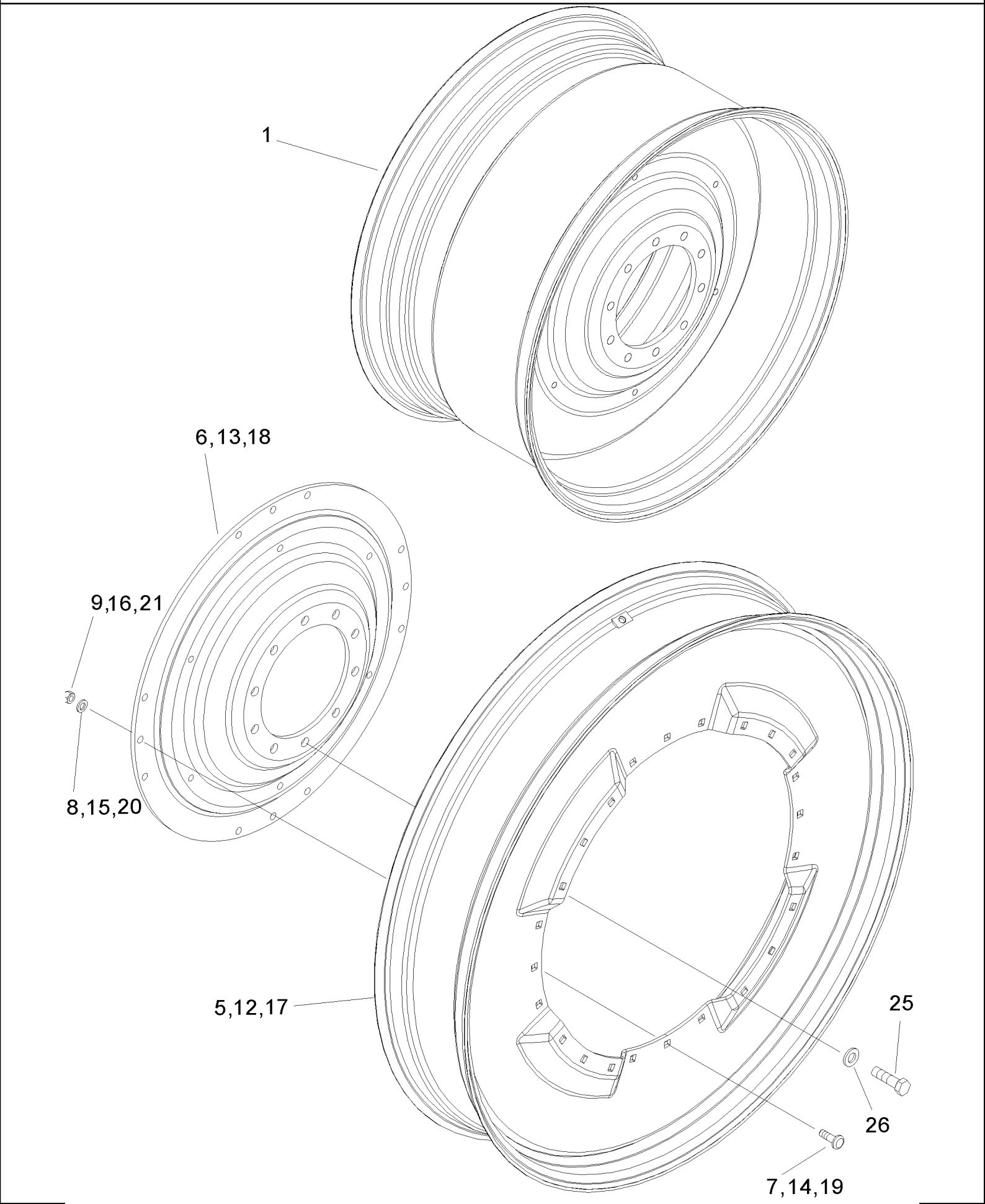

MX285 CASE IH MAGNUM TRACTOR (NORTH AMERICA)

06-49 SOLID STEEL REAR WHEELS

ссылка	Номер детали	Кол-во	Описание
1	222665A1	2	WHEEL, W18Ax38, For Tires 20.8R38, 520/85R38
1	193300A2	2	WHEEL, MW23Ax38, For Tires 710/70R38
1	403037A1	2	WHEEL, MW25Ax38, For Tires 800/70R38
1	221362A1	2	WHEEL, W16Ax42, For Tires 18.4R42, 480/80R42
1	193857A1	2	WHEEL, W18Ax42, For Tires 20.8R42, 520/85R42
1	276687A1	2	WHEEL, MW20Ax42, For Tires 620/70R42
1	305792A1	2	WHEEL, MW23Ax42, For Tires 710/70R42
1	311352A1	2	WHEEL, MW28Ax42, For Tire 900/50R42
1	196254A1	2	WHEEL, W13x46, For Tires 14.9R46, 380/90R46, 420/80R46
1	196488A1	2	WHEEL, W16Ax46, For Tires 18.4R46, 520/85R46, 480/80R46
1	349008A1	2	WHEEL, DW15Lx50, For Tires 480/80R50
	283939A2	2	WHEEL ASSY., W10Ax54, Inc. 5 - 9, For Tires 12.4R54, 320/90R54
5	310835A2	1	RIM,
6	310836A1	1	DISC,
7	240686A1	12	BOLT, SPECIAL,
8	896-11016	12	WASHER, M17.5 x 30 x 4, HT, 17,5 x 30 x 4 mm
9	829-1416	12	NUT, M16, Cl 10, M16; 10
	395747A1	2	WHEEL ASSY., DW12x50, Inc 12 - 16, For Tires 380/90R50
12	395748A1	1	RIM,
13	310836A1	1	DISC,
14	240686A1	12	BOLT, SPECIAL,
15	896-11016	12	WASHER, M17.5 x 30 x 4, HT, 17,5 x 30 x 4 mm
16	829-1416	12	NUT, M16, Cl 10, M16; 10
	394104A1	2	WHEEL ASSY., W12Ax54, Inc. 17 - 21, For Tires 380/90R54
17	394103A1	1	RIM,
18	310836A1	1	DISC,
19	240686A1	12	BOLT, SPECIAL,
20	896-11016	12	WASHER, M17.5 x 30 x 4, HT, 17,5 x 30 x 4 mm
21	829-1416	12	NUT, M16, Cl 10, M16; 10
25	827-22080	20	BOLT, Hex, M22 x 80, 10.9, Full Thd, M22 x 80; 10.9
26	496-31094	20	WASHER, 15/16" x 1 3/4" x .219", HDN, 15/16 x 1-3/4 x 7/32

MX285 CASE IH MAGNUM TRACTOR (NORTH AMERICA)

06-50 HUB ASSEMBLY - REAR WHEEL

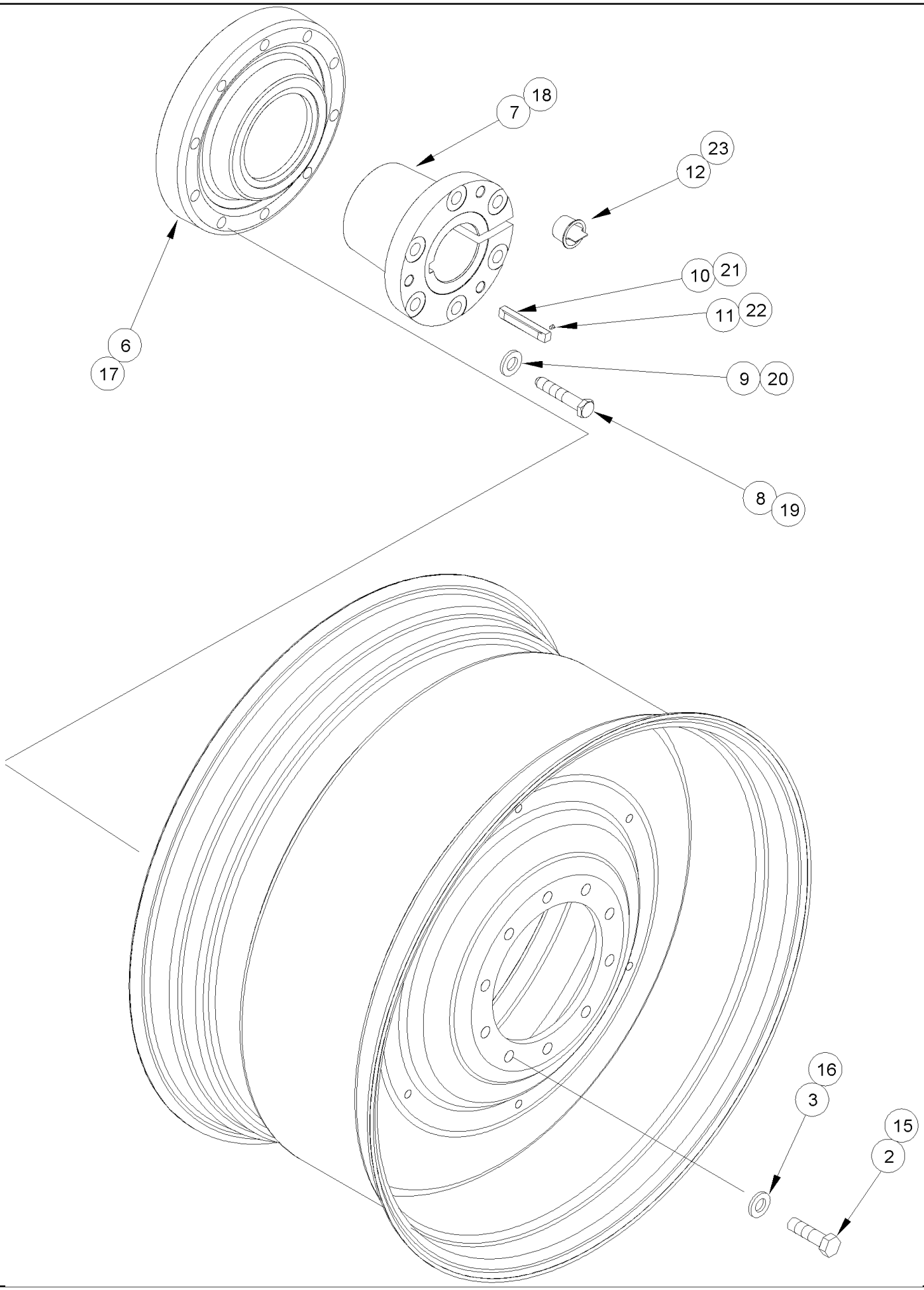

MX285 CASE IH MAGNUM TRACTOR (NORTH AMERICA)

06-50 HUB ASSEMBLY - REAR WHEEL

ссылка	Номер детали	Кол-во	Описание
	435955A1	1	PACKAGE, Hub For 102 mm (4 in) axle, Inc. 2 - 11, Order From Machinery Price List
2	827-22080	20	BOLT, Hex, M22 x 80, 10.9, Full Thd, M22 x 80; 10.9
3	496-31094	20	WASHER, 15/16" x 1 3/4" x .219", HDN, 15/16 x 1-3/4 x 7/32
6	405812A1	2	HUB,
7	405815A1	2	BUSHING, 102 mm (4 in)
8	228273A1	12	BOLT, M20 x 110; 10,9
9	396-31081	12	WASHER, 13/16" x 1 1/2" x .219", HDN, 13/16 x 1-1/2 x 7/32
10	A63219	2	KEY, 3/4 x 6
11	38-11608	2	PIN, 1/4" x 1/2", Slotted, 1/4" x 1/2", Slotted
12	303401A1	6	PLUG,
	435956A1	1	PACKAGE, Hub For 115 mm (4-1/2 in) axle, Inc. 15 - 23, Order From Machinery Price List
15	827-22080	20	BOLT, Hex, M22 x 80, 10.9, Full Thd, M22 x 80; 10.9
16	496-31094	20	WASHER, 15/16" x 1 3/4" x .219", HDN, 15/16 x 1-3/4 x 7/32
17	405812A1	2	HUB,
18	405816A1	2	BUSHING, 115 mm (4-1/2 in)
19	228273A1	12	BOLT, M20 x 110; 10,9
20	396-31081	12	WASHER, 13/16" x 1 1/2" x .219", HDN, 13/16 x 1-1/2 x 7/32
21	A63219	2	KEY, 3/4 x 6
22	38-11608	2	PIN, 1/4" x 1/2", Slotted, 1/4" x 1/2", Slotted
23	303401A1	6	PLUG,

MX285 CASE IH MAGNUM TRACTOR (NORTH AMERICA)

06-51 SPACER - DUAL REAR WHEELS

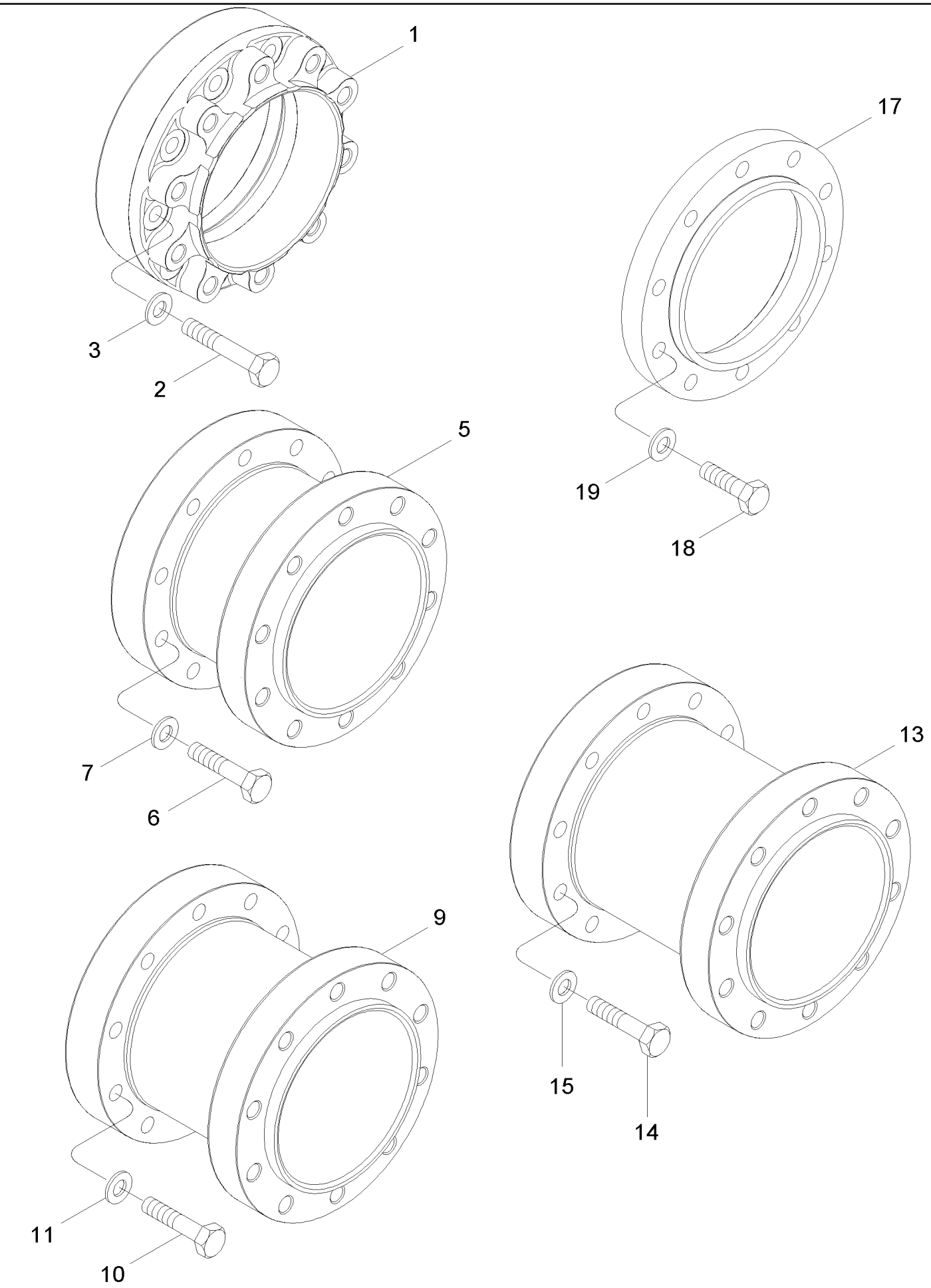

MX285 CASE IH MAGNUM TRACTOR (NORTH AMERICA)

06-51 SPACER - DUAL REAR WHEELS

ссылка	Номер детали	Кол-во	Описание
	441597A1	1	SPACER, Inc. 1 - 3, Order From Machinery Price List
1	405822A1	2	SPACER, 127 mm (5 in)
2	827-22160	20	BOLT, Hex, M22 x 150, 10.9, M22 x 160; 10.9
3	496-31094	20	WASHER, 15/16" x 1 3/4" x .219", HDN, 15/16 x 1-3/4 x 7/32
	441598A1	1	SPACER, Inc. 5 - 7, Order From Machinery Price List
5	405823A1	2	SPACER, 254 mm (10 in)
6	827-22130	20	BOLT, Hex, M22 x 130, 10.9, M22 x 130; 10.9
7	496-31094	20	WASHER, 15/16" x 1 3/4" x .219", HDN, 15/16 x 1-3/4 x 7/32
	441599A1	1	SPACER, Inc. 9 - 11, Order From Machinery Price List
9	405824A1	2	SPACER, 330 mm (13 in)
10	827-22130	20	BOLT, Hex, M22 x 130, 10.9, M22 x 130; 10.9
11	496-31094	20	WASHER, 15/16" x 1 3/4" x .219", HDN, 15/16 x 1-3/4 x 7/32
	441600A1	1	SPACER, Inc. 13 - 15, Order From Machinery Price List
13	405825A1	2	SPACER, 381 mm (15 in)
14	827-22130	20	BOLT, Hex, M22 x 130, 10.9, M22 x 130; 10.9
15	496-31094	20	WASHER, 15/16" x 1 3/4" x .219", HDN, 15/16 x 1-3/4 x 7/32
	NSS	1	NOT SERVICED SEPARATELY, Spacer Extension, Inc. 17 - 19, Order 719605006 From Machinery Price List
17	NSS	2	NOT SERVICED SEPARATELY, Spacer, 38 mm (1-1/2 in)
18	827-22120	20	BOLT, Hex, M22 x 120, 10.9, M22 x 120; 10,9
19	496-31094	20	WASHER, 15/16" x 1 3/4" x .219", HDN, 15/16 x 1-3/4 x 7/32

06-52 REAR WHEEL WEIGHTS

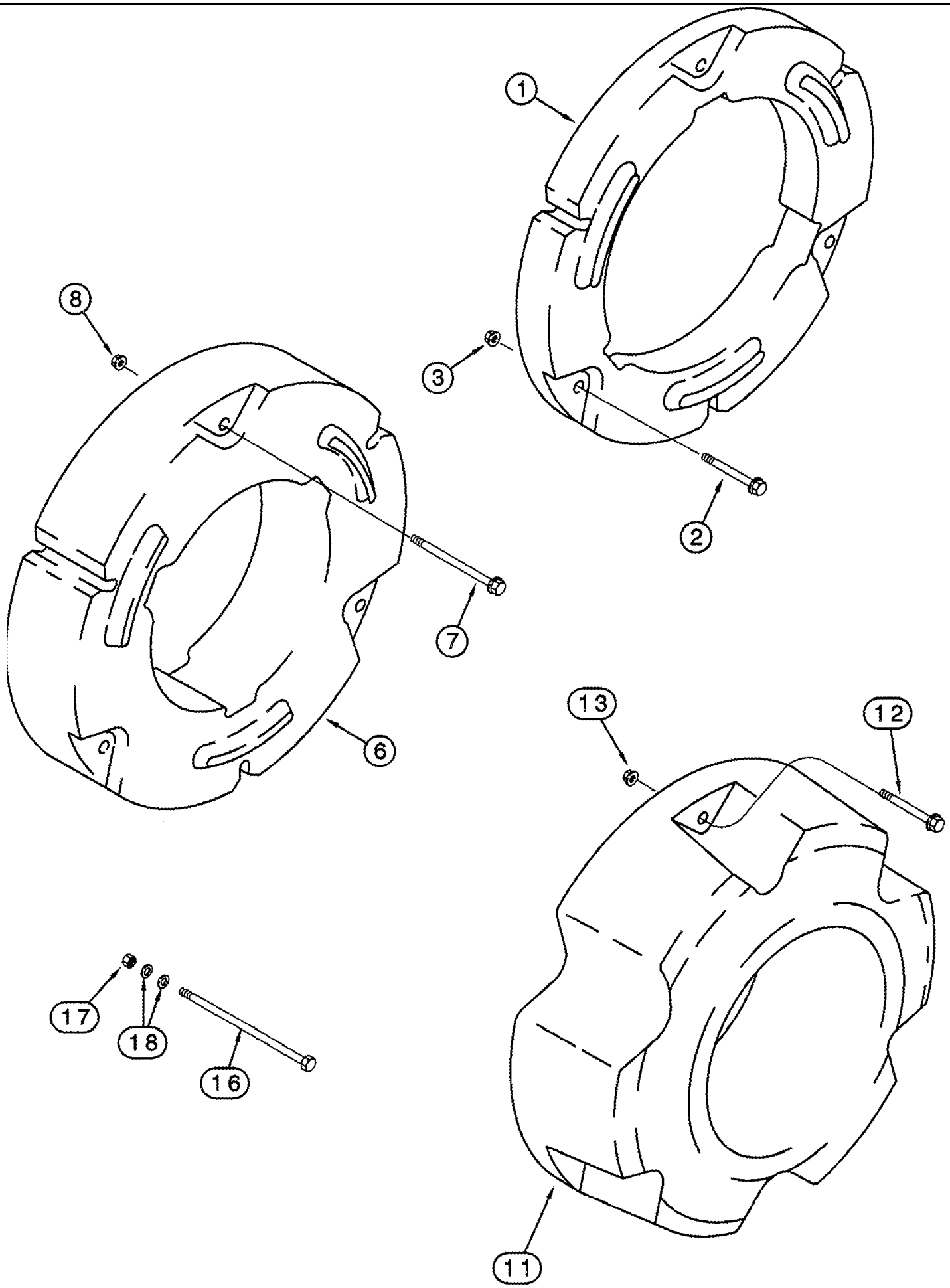

MX285 CASE IH MAGNUM TRACTOR (NORTH AMERICA)

06-52 REAR WHEEL WEIGHTS

ссылка	Номер детали	Кол-во	Описание
	435961A1	1	WHEEL WEIGHT, 200 lb, Inc. 1 - 3, Order From Machinery Price List
1	405828A1	2	WEIGHT,
2	857-16110	6	BOLT, Hex Flg, M16 x 110, 10.9, Full Thd, M16 x 110; 10.9
3	832-44416	6	NUT, LOCK, M16 x 2, Flg, Cl 10, M16; 10
	435962A1	1	WEIGHT, 500 lb, Inc. 6 - 8, Order From Machinery Price List
6	405829A1	2	WEIGHT,
7	857-16180	6	BOLT, Hex Flg, M16 x 180, 8.8, M16 x 180; 10.9
8	832-44416	6	NUT, LOCK, M16 x 2, Flg, Cl 10, M16; 10
	435963A1	1	WHEEL WEIGHT, 1000 lb, Inc. 11 - 13, Order From Machinery Price List
11	405830A1	2	WEIGHT,
12	857-16110	6	BOLT, Hex Flg, M16 x 110, 10.9, Full Thd, M16 x 110; 10.9
13	832-44416	6	NUT, LOCK, M16 x 2, Flg, Cl 10, M16; 10
16	413-1088	6	BOLT, Hex, 5/8"-11 x 5 1/2", G5, 5/8 x 5-1/2
16	413-10136	6	BOLT, Hex, 5/8"-11 x 8 1/2", G5, 5/8 x 8-1/2
17	425-2810	6	NUT, Flg, 5/8"-11, G5, 5/8
18	496-21066	12	WASHER, 21/32" x 1 5/16" x .150", 21/32 x 1-5/16 x 5/32

MX285 CASE IH MAGNUM TRACTOR (NORTH AMERICA)

07-01 BRAKES - PEDAL BRAKE

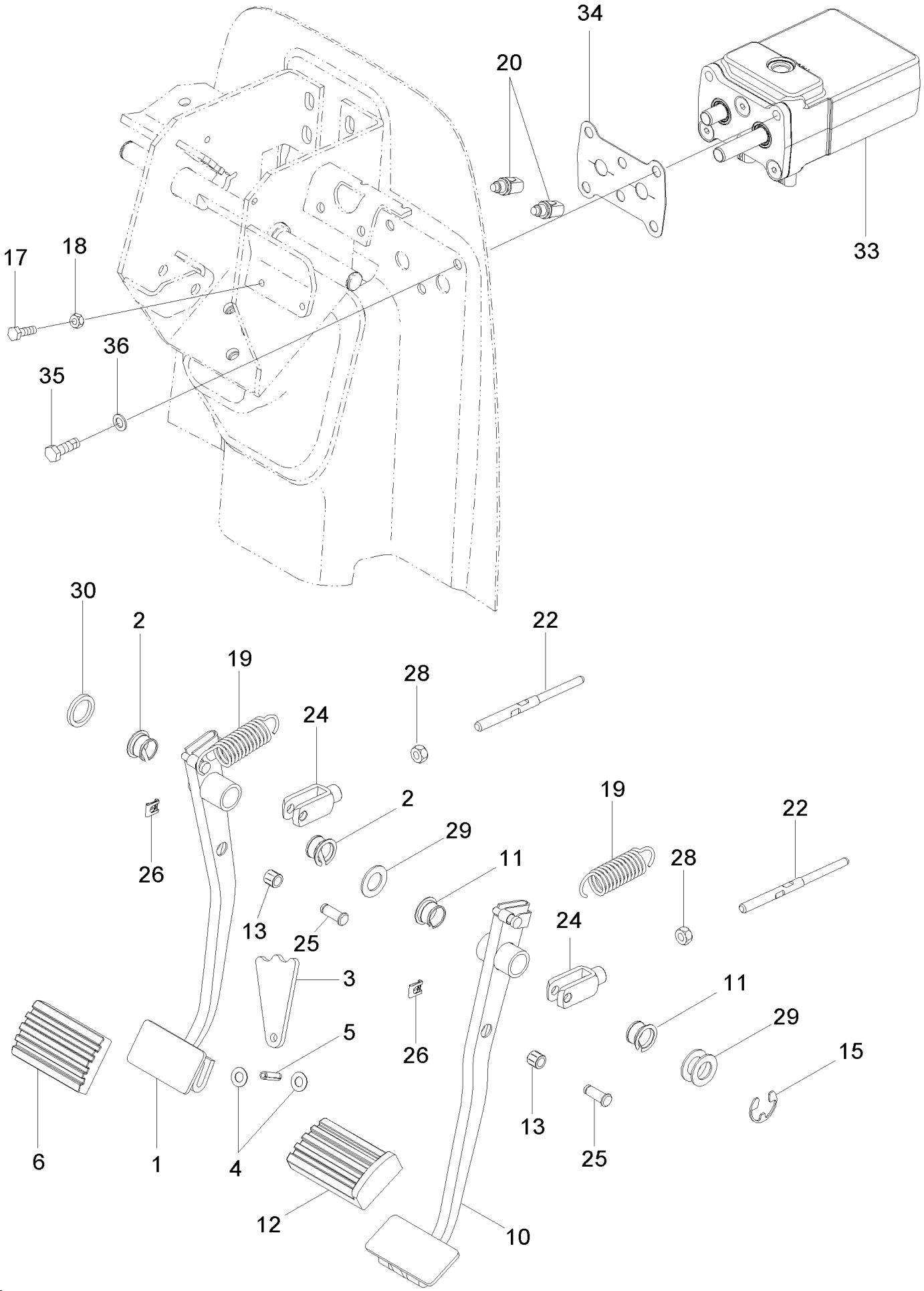

MX285 CASE IH MAGNUM TRACTOR (NORTH AMERICA)

07-01 BRAKES - PEDAL BRAKE

ссылка	Номер детали	Кол-во	Описание
1	400859A3	1	PEDAL ASSY., Left Hand, Inc. 2 - 7
2	1990753C1	2	PLASTIC RING,
3	188419A1	1	ARM,
4	906045R1	2	WASHER, SPRING, M10.2 ID x 20.5 OD x .8 Thk, 10,2 x 20 x 0,8 mm
5	738-1825	1	PIN, M8 x 25, Slotted, 8 x 25
6	1999381C1	1	PAD, RUBBER,
7	298715A1	1	BUSHING,
10	400862A3	1	PEDAL ASSY., Right Hand, Inc. 11 - 13
11	1990753C1	2	PLASTIC RING,
12	1999382C1	1	PAD, RUBBER,
13	298715A1	1	BUSHING,
15	800-3120	1	CIRCLIP, M20, 20 mm
17	614-8025	2	BOLT, Hex, M8 x 25, 8.8,
18	829-1408	2	NUT, M8, Cl 10, M8; 10
19	236504A2	2	SPRING,
20	279265A2	2	SWITCH,
22	400865A1	2	ROD,
24	236323A1	2	CLEVIS,
25	192869A1	2	PIN, CLEVIS,
26	193182A1	2	CLIP,
28	829-1410	2	NUT, M10, Cl 10, M10; 10.9
29	T102217	AR	WASHER,
30	258242A1	1	WASHER,
33	397101A6	1	VALVE, Brake, See Figure 07-05
34	407142A1	1	GASKET,
35	806-10030	3	BOLT, Hex, Lock, M10 x 30, Cl 10.9, M10 x 30; 10.9
36	895-18010	3	WASHER, M10 x 18 x 1.6, 11 x 18 x 1,6 mm

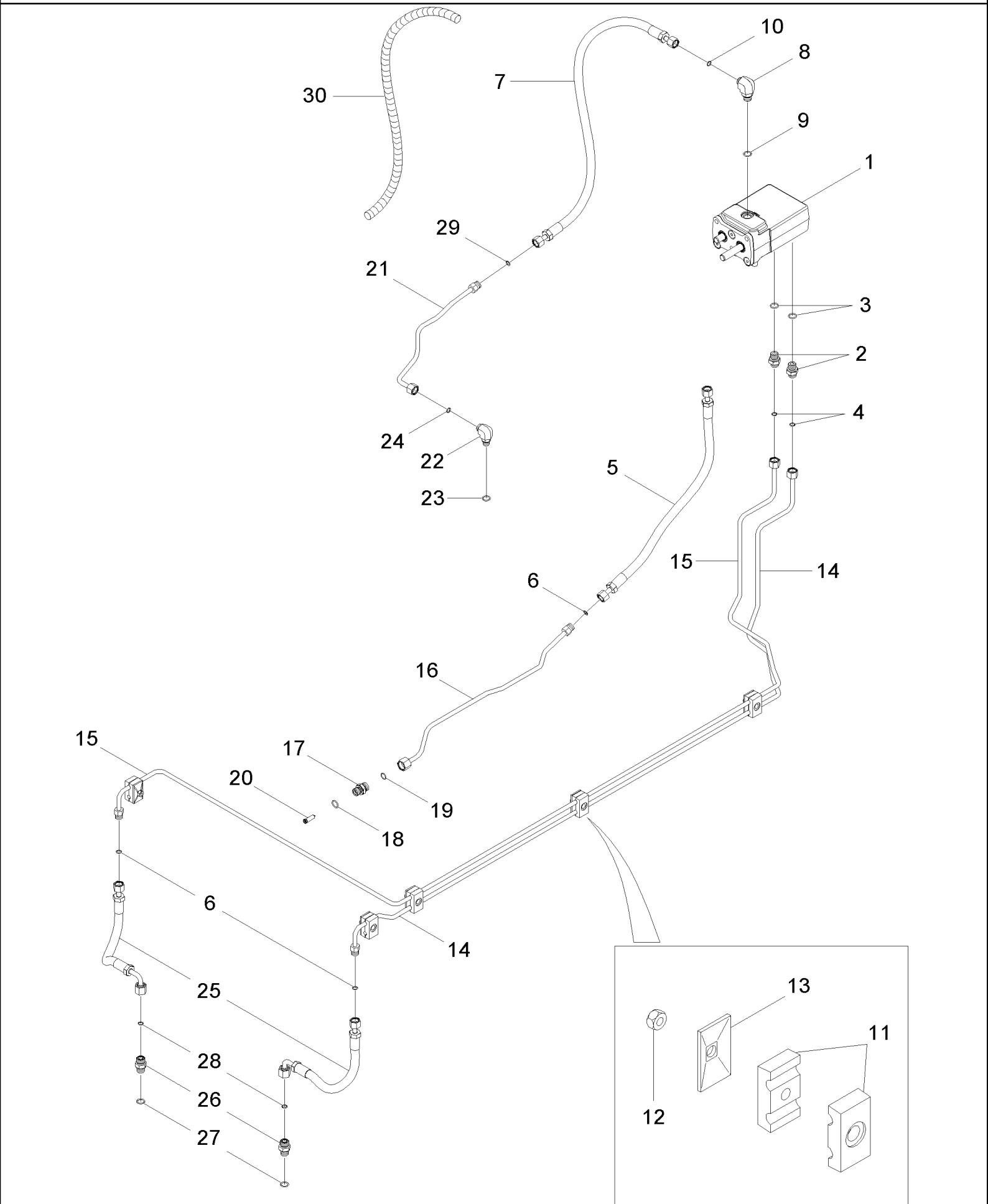
10
8
7
30
9
1
29
21
3
2
4
24
22
23
5
15
14
6
16
15
17
20
19
18
6
14
25
28
26
27
13
11
12

MX285 CASE IH MAGNUM TRACTOR (NORTH AMERICA)

07-02 BRAKES - HYDRAULIC SYSTEM, WITHOUT TRAILER BRAKES

ссылка	Номер детали	Кол-во	Описание
1	87442167	1	VALVE, Brake, See Figure 07-05
2	700-106	2	CONNECTOR, HYD., 11/16"-16 ORFS x M18 x 1.5 ORB, 11/16 fc sl x 18 Or, Inc 3, 4
3	637-63153	1	O-RING, Cl 6, 15.3MM ID x 2.2 Thk, 15,3 ID x 2,2
4	238-6012	1	O-RING, -012, 90 Duro, .364" ID x .070" Thk,
5	87404717	1	HOSE ASSY., Supply
6	238-6012	3	O-RING, -012, 90 Duro, .364" ID x .070" Thk,
7	400692A1	1	HOSE, Return, BSN AJB0304631
7	87432131	1	HOSE, Return, ASN AJB0304631
8	700-345	1	ELBOW, 90є, 11/16"-18 ORFS x M18 x 1.5 ORB, 11/16 fc sl x 18 Or, Inc. 9, 10, BSN AJB0304631
8	700-305	1	ELBOW, 90є, 13/16"-18 ORFS x M18 x 1.5 ORB, 13/16 fc sl x 18 Or, Inc. 9, 10, ASN AJB0304631
9	637-63153	1	O-RING, Cl 6, 15.3MM ID x 2.2 Thk, 15,3 ID x 2,2
10	238-6012	1	O-RING, -012, 90 Duro, .364" ID x .070" Thk, , BSN AJB0304631
10	238-6014	1	O-RING, -014, 90 Duro, .489" ID x .070" Thk, , ASN AJB0304631
11	1546024C1	5	CLAMP,
12	829-1408	5	NUT, M8, Cl 10, M8; 10
13	384870A1	5	PLATE,
14	436382A1	1	TUBE ASSY., Right Hand Brake
15	436383A1	1	TUBE ASSY., Left Hand Brake
16	433588A1	1	TUBE ASSY., Supply
17	700-102	1	CONNECTOR, HYD., 13/16"-16 ORFS x M18 x 1.5 ORB, 13/16 fc sl x 18 Or, Inc. 18 - 20
18	637-63153	1	O-RING, Cl 6, 15.3MM ID x 2.2 Thk, 15,3 ID x 2,2
19	238-6014	1	O-RING, -014, 90 Duro, .489" ID x .070" Thk,
20	326965A1	1	SCREEN,
21	387024A1	1	TUBE ASSY., Return, BSN AJB0304631
21	87432130	1	TUBE ASSY., Return, BTW AJB0304631 & AJB0355338
21	87440347	1	TUBE, Return, ASN AJB0355338
22	201-304	1	ELBOW, 90є, 11/16"-16 x 9/16"-18 Adj, ORFS, 11/16 fc sl x 9/16 Or, Inc. 23, 24, BSN AJB0304631
22	87432129	1	ELBOW, 13/16 fc sl x 9/16 Or, Inc. 23, 24, BTW AJB0304631 & AJB0355338
22	700-305	1	ELBOW, 90є, 13/16"-18 ORFS x M18 x 1.5 ORB, 13/16 fc sl x 18 Or, Inc. 23, 24, ASN AJB0355338
23	637-63153	1	O-RING, Cl 6, 15.3MM ID x 2.2 Thk, 15,3 ID x 2,2, ASN AJB0355338
24	238-6012	1	O-RING, -012, 90 Duro, .364" ID x .070" Thk, , BSN AJB0304631
24	238-6014	1	O-RING, -014, 90 Duro, .489" ID x .070" Thk, , ASN AJB0304631
25	86985588	2	HOSE, FLEXIBLE,
26	700-102	2	CONNECTOR, HYD., 13/16"-16 ORFS x M18 x 1.5 ORB, 13/16 fc sl x 18 Or, Inc. 27, 28
27	637-63153	1	O-RING, Cl 6, 15.3MM ID x 2.2 Thk, 15,3 ID x 2,2
28	238-6014	1	O-RING, -014, 90 Duro, .489" ID x .070" Thk,
29	238-6012	1	O-RING, -012, 90 Duro, .364" ID x .070" Thk, , BSN AJB0304631
29	238-6014	1	O-RING, -014, 90 Duro, .489" ID x .070" Thk, , ASN AJB0304631
30	384834A1	1	LINE, Conduit (If Equipped), With Fuel Separator Filter
23	237-6006	1	O-RING, 6-1, 90 Duro, .468" ID x .078" Thk, , BSN AJB0355338

07-03 BRAKES - HYDRAULIC SYSTEM, WITH HYDRAULIC TRAILER BRAKES

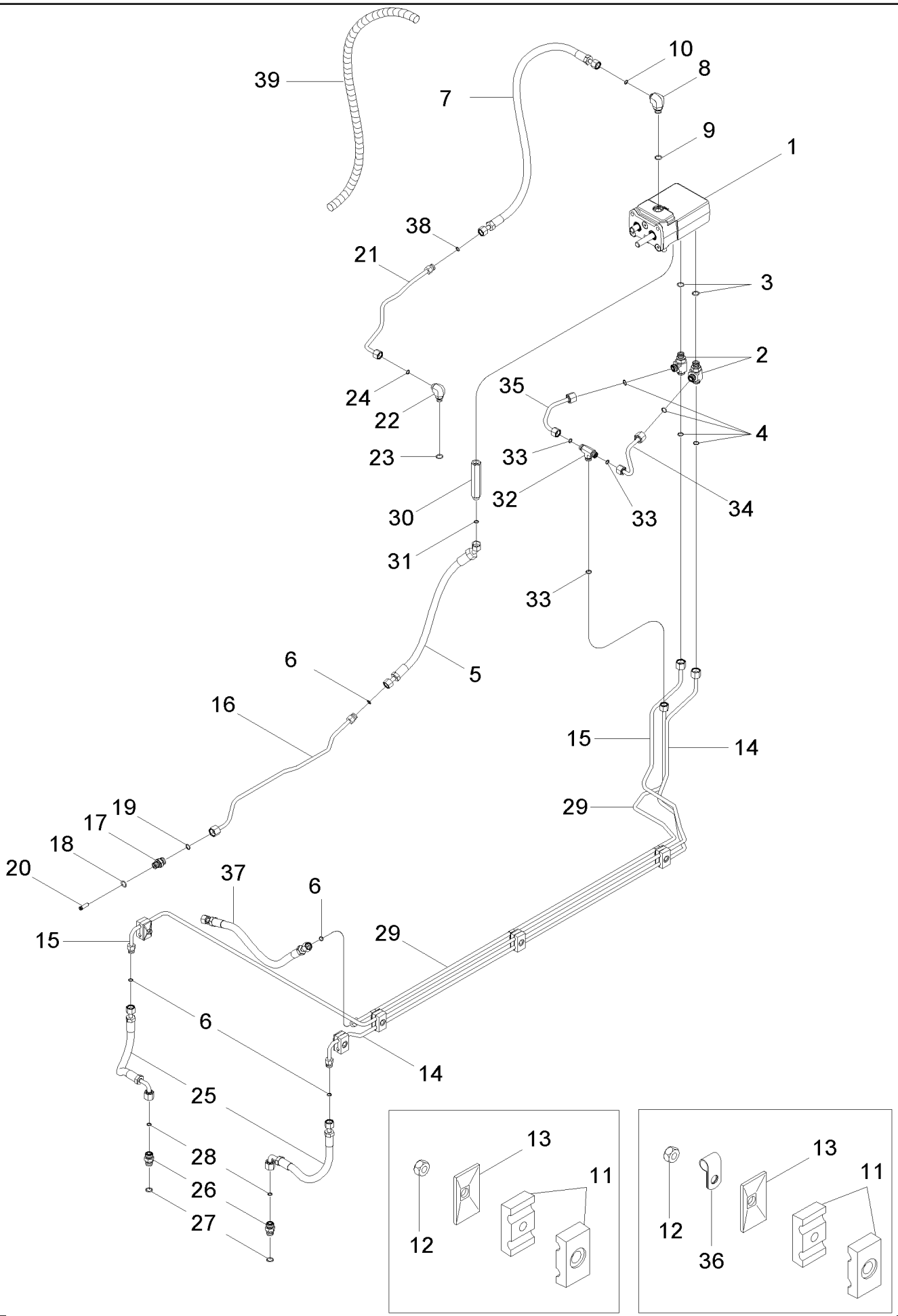

MX285 CASE IH MAGNUM TRACTOR (NORTH AMERICA)

07-03 BRAKES - HYDRAULIC SYSTEM, WITH HYDRAULIC TRAILER BRAKES

ссылка	Номер детали	Кол-во	Описание
1	87442167	1	VALVE, Brake, See Figure 07-05
2	700-412	2	TEE, 13/16"-16 ORFS x M18 x 1.5 ORB Run, 13/16 fc sl x 18 Or, Inc. 3, 4
3	637-63153	1	O-RING, Cl 6, 15.3MM ID x 2.2 Thk, 15,3 ID x 2,2
4	238-6014	2	O-RING, -014, 90 Duro, .489" ID x .070" Thk,
5	87423387	1	HOSE ASSY., Supply
6	238-6012	3	O-RING, -012, 90 Duro, .364" ID x .070" Thk,
7	400692A1	1	HOSE, Return, BSN AJB0304631
7	87432131	1	HOSE, Return, ASN AJB0304631
8	700-345	1	ELBOW, 90є, 11/16"-18 ORFS x M18 x 1.5 ORB, 11/16 fc sl x 18 Or, Inc. 9, 10, BSN AJB0304631
8	700-305	1	ELBOW, 90є, 13/16"-18 ORFS x M18 x 1.5 ORB, 13/16 fc sl x 18 Or, Inc. 9, 10, ASN AJB0304631
9	637-63153	1	O-RING, Cl 6, 15.3MM ID x 2.2 Thk, 15,3 ID x 2,2
10	238-6012	1	O-RING, -012, 90 Duro, .364" ID x .070" Thk, , BSN AJB0304631
10	238-6014	1	O-RING, -014, 90 Duro, .489" ID x .070" Thk, , ASN AJB0304631
11	1546024C1	5	CLAMP,
12	829-1408	5	NUT, M8, Cl 10, M8; 10
13	384870A1	5	PLATE,
14	86992766	1	TUBE ASSY., Right Hand Brake
15	86992767	1	TUBE ASSY., Left Hand Brake
16	433588A1	1	TUBE ASSY., Supply
17	316443A2	1	FITTING, 13/16 fc sl x 18 Or, Inc. 18 - 20
18	637-63153	1	O-RING, Cl 6, 15.3MM ID x 2.2 Thk, 15,3 ID x 2,2
19	238-6014	1	O-RING, -014, 90 Duro, .489" ID x .070" Thk,
20	326965A1	1	SCREEN,
21	387024A1	1	TUBE ASSY., Return, BSN AJB0304631
21	87432130	1	TUBE ASSY., Return, BTW AJB0304631 & AJB0355338
21	87440347	1	TUBE, Return, ASN AJB0355338
22	201-304	1	ELBOW, 90є, 11/16"-16 x 9/16"-18 Adj, ORFS, 11/16 fc sl x 9/16 Or, Inc. 23, 24, BSN AJB0304631
22	87432129	1	ELBOW, 13/16 fc sl x 9/16 Or, Inc. 23, 24, BTW AJB0304631 & AJB0355338
22	700-305	1	ELBOW, 90є, 13/16"-18 ORFS x M18 x 1.5 ORB, 13/16 fc sl x 18 Or, Inc. 23, 24, ASN AJB0355338
23	637-63153	1	O-RING, Cl 6, 15.3MM ID x 2.2 Thk, 15,3 ID x 2,2, ASN AJB0355338
24	238-6012	1	O-RING, -012, 90 Duro, .364" ID x .070" Thk, , BSN AJB0304631
24	238-6014	1	O-RING, -014, 90 Duro, .489" ID x .070" Thk, , ASN AJB0304631
25	86985588	2	HOSE, FLEXIBLE,
26	700-102	2	CONNECTOR, HYD., 13/16"-16 ORFS x M18 x 1.5 ORB, 13/16 fc sl x 18 Or, Inc. 26, 27
27	637-63153	1	O-RING, Cl 6, 15.3MM ID x 2.2 Thk, 15,3 ID x 2,2
28	238-6014	1	O-RING, -014, 90 Duro, .489" ID x .070" Thk,
29	87404777	1	TUBE ASSY., Inc. 29
30	86988933	1	CONNECTOR, HYD., Inc. 31
31	238-6012	1	O-RING, -012, 90 Duro, .364" ID x .070" Thk,
32	86991302	1	VALVE, HYDRAULIC, Inc. 33
33	238-6012	3	O-RING, -012, 90 Duro, .364" ID x .070" Thk,
34	86992682	1	TUBE ASSY., Right Hand
35	86992681	1	TUBE ASSY., Left Hand
36	515-2295	3	CLAMP, 3/8", Insul, 5/16" Bolt, 3/8 ID
37	86985589	1	HOSE ASSY.,

ссылка	Номер детали	Кол-во	Описание
38	238-6012	1	O-RING, -012, 90 Duro, .364" ID x .070" Thk, , BSN AJB0304631
38	238-6014	1	O-RING, -014, 90 Duro, .489" ID x .070" Thk, , ASN AJB0304631
39	384834A1	1	LINE, Conduit (If Equipped), With Fuel Separator Filter
23	237-6006	1	O-RING, 6-1, 90 Duro, .468" ID x .078" Thk, , BSN AJB0355338

MX285 CASE IH MAGNUM TRACTOR (NORTH AMERICA)

07-04 BRAKES - HYDRAULIC SYSTEM, WITH PNEUMATIC TRAILER BRAKES

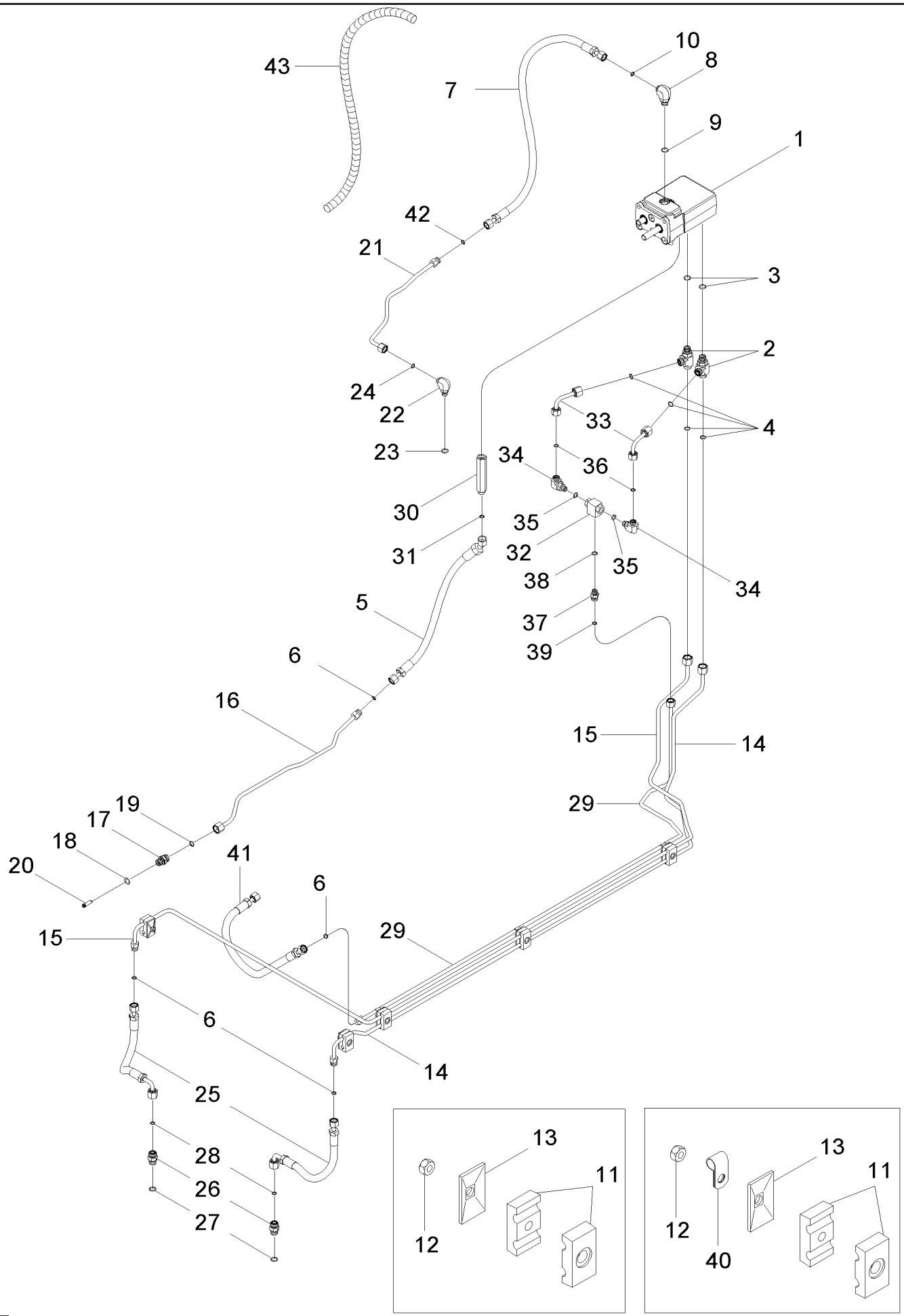

MX285 CASE IH MAGNUM TRACTOR (NORTH AMERICA)

07-04 BRAKES - HYDRAULIC SYSTEM, WITH PNEUMATIC TRAILER BRAKES

сылка	Номер детали	Кол-во	Описание
1	87442167	1	VALVE, Brake, See Figure 07-06
2	700-412	2	TEE, 13/16"-16 ORFS x M18 x 1.5 ORB Run, 13/16 fc sl x 18 Or, Inc. 3, 4
3	637-63153	1	O-RING, Cl 6, 15.3MM ID x 2.2 Thk, 15,3 ID x 2,2
4	238-6014	2	O-RING, -014, 90 Duro, .489" ID x .070" Thk,
5	87423387	1	HOSE ASSY., Supply
6	238-6012	3	O-RING, -012, 90 Duro, .364" ID x .070" Thk,
7	400692A1	1	HOSE, Return
7	400692A1	1	HOSE, Return, BSN AJB0304631
8	700-345	1	ELBOW, 90є, 11/16"-18 ORFS x M18 x 1.5 ORB, 11/16 fc sl x 18 Or, Inc. 9, 10, BSN AJB0304631
8	700-305	1	ELBOW, 90є, 13/16"-18 ORFS x M18 x 1.5 ORB, 13/16 fc sl x 18 Or, Inc. 9, 10, ASN AJB0304631
9	637-63153	1	O-RING, Cl 6, 15.3MM ID x 2.2 Thk, 15,3 ID x 2,2
10	238-6012	1	O-RING, -012, 90 Duro, .364" ID x .070" Thk, , BSN AJB0304631
10	238-6014	1	O-RING, -014, 90 Duro, .489" ID x .070" Thk, , ASN AJB0304631
11	1546024C1	5	CLAMP,
12	829-1408	5	NUT, M8, Cl 10, M8; 10
13	384870A1	5	PLATE,
14	86992766	1	TUBE ASSY., Right Hand Brake
15	86992767	1	TUBE ASSY., Left Hand Brake
16	433588A1	1	TUBE ASSY., Supply
17	316443A2	1	FITTING, 13/16 fc sl x 18 Or, Inc. 18 - 20
18	637-63153	1	O-RING, Cl 6, 15.3MM ID x 2.2 Thk, 15,3 ID x 2,2
19	238-6014	1	O-RING, -014, 90 Duro, .489" ID x .070" Thk,
20	326965A1	1	SCREEN,
21	387024A1	1	TUBE ASSY., Return, BSN AJB0304631
21	87432130	1	TUBE ASSY., Return, BTW AJB0304631 & AJB0355338
21	87440347	1	TUBE, Return, ASN AJB0355338
22	201-304	1	ELBOW, 90є, 11/16"-16 x 9/16"-18 Adj, ORFS, 11/16 fc sl x 9/16 Or, Inc. 23, 24, BSN AJB0304631
22	87432129	1	ELBOW, 13/16 fc sl x 9/16 Or, Inc. 23, 24, BTW AJB0304631 & AJB0355338
22	700-305	1	ELBOW, 90є, 13/16"-18 ORFS x M18 x 1.5 ORB, 13/16 fc sl x 18 Or, Inc. 23, 24, ASN AJB0355338
24	238-6012	1	O-RING, -012, 90 Duro, .364" ID x .070" Thk, , BSN AJB0304631
24	238-6014	1	O-RING, -014, 90 Duro, .489" ID x .070" Thk, , ASN AJB0304631
25	86985588	2	HOSE, FLEXIBLE,
26	700-102	2	CONNECTOR, HYD., 13/16"-16 ORFS x M18 x 1.5 ORB, 13/16 fc sl x 18 Or, Inc. 26, 27
27	637-63153	1	O-RING, Cl 6, 15.3MM ID x 2.2 Thk, 15,3 ID x 2,2
28	238-6014	1	O-RING, -014, 90 Duro, .489" ID x .070" Thk,
29	87404777	1	TUBE ASSY.,
30	86988933	1	CONNECTOR, HYD., Inc. 31
31	238-6012	1	O-RING, -012, 90 Duro, .364" ID x .070" Thk,
32	176143A1	1	VALVE,
33	442240A1	2	TUBE ASSY.,
34	201-304	2	ELBOW, 90є, 11/16"-16 x 9/16"-18 Adj, ORFS, 11/16 fc sl x 9/16 Or, Inc. 35, 36
36	238-6012	1	O-RING, -012, 90 Duro, .364" ID x .070" Thk,
37	201-101	1	CONNECTOR, HYD., 11/16"-18 ORFS x 9/16"-18 ORB, 11/16 fc sl x 9/16 Or, Inc. 38, 39
39	238-6012	1	O-RING, -012, 90 Duro, .364" ID x .070" Thk,
40	515-2295	3	CLAMP, 3/8", Insul, 5/16" Bolt, 3/8 ID

MX285 CASE IH MAGNUM TRACTOR (NORTH AMERICA)

07-04 BRAKES - HYDRAULIC SYSTEM, WITH PNEUMATIC TRAILER BRAKES

сылка	Номер детали	Кол-во	Описание
41	86985956	1	HOSE,
42	238-6012	1	O-RING, -012, 90 Duro, .364" ID x .070" Thk, , BSN AJB0304631
42	238-6014	1	O-RING, -014, 90 Duro, .489" ID x .070" Thk, , ASN AJB0304631
43	384834A1	1	LINE, Conduit (If Equipped), With Fuel Separator Filter
23	237-6006	1	O-RING, 6-1, 90 Duro, .468" ID x .078" Thk,
35	237-6006	1	O-RING, 6-1, 90 Duro, .468" ID x .078" Thk,
38	237-6006	1	O-RING, 6-1, 90 Duro, .468" ID x .078" Thk,

MX285 CASE IH MAGNUM TRACTOR (NORTH AMERICA)

07-05 BRAKES - CONTROL VALVE

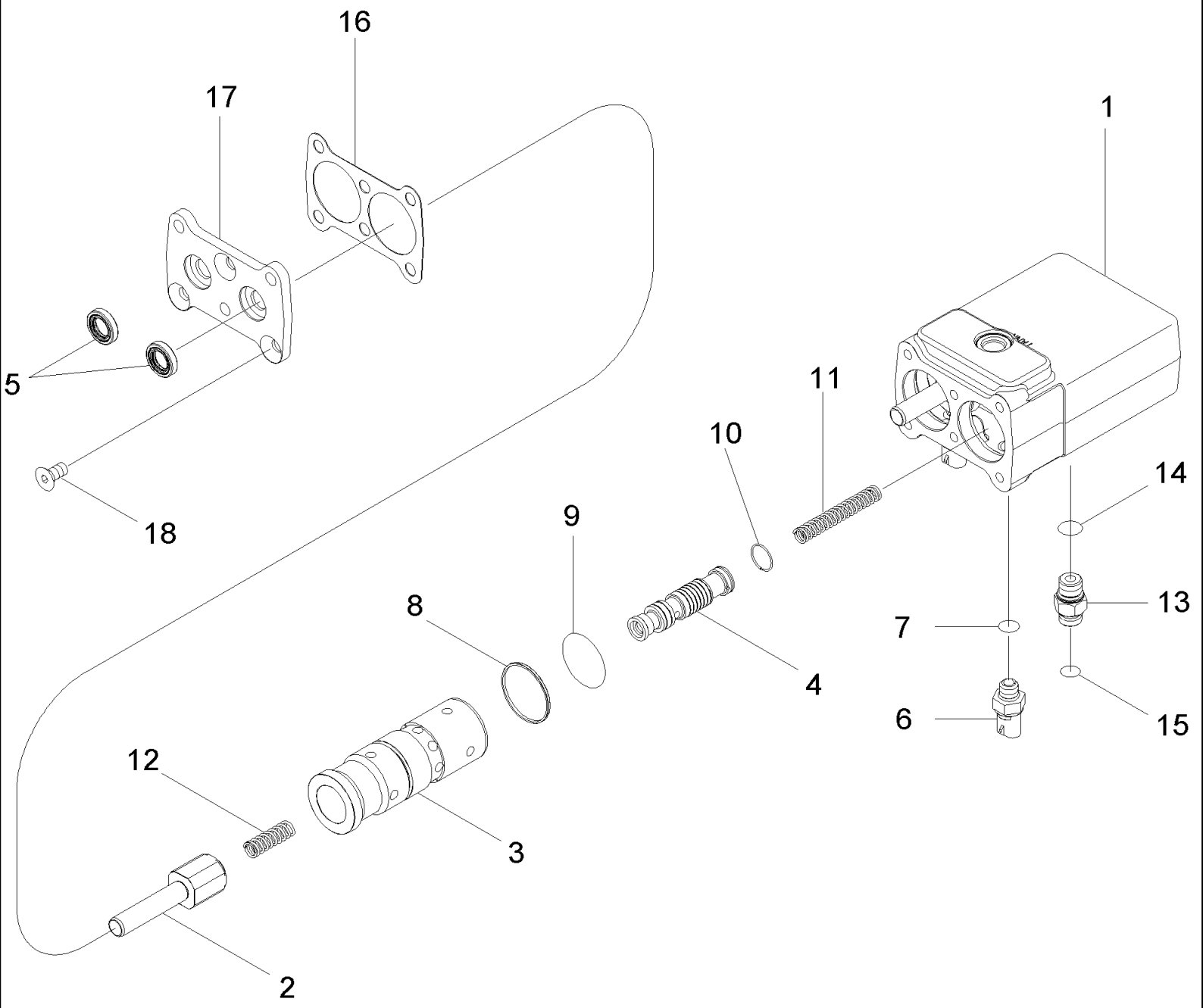

MX285 CASE IH MAGNUM TRACTOR (NORTH AMERICA)

07-05 BRAKES - CONTROL VALVE

ссылка	Номер детали	Кол-во	Описание
	87442167	1	VALVE, Inc. 1 - 17
1	NSS	1	NOT SERVICED SEPARATELY, Body
2	433199A1	2	POPPET,
3	397105A5	2	SLEEVE,
4	397106A5	2	SPOOL,
5	A63399	2	SEAL,
6	279266A1	2	SWITCH, Inc. 7
7	237-6003	1	O-RING, 3-1, .301" ID x .064" Thk,
8	407387A1	2	SEALRING,
9	238-7131	2	O-RING, -131, Cl 7, 1.674" ID x .103" Thk,
10	407282A1	2	RING, SNAP,
11	397110A1	2	SPRING, COMPRESSION,
12	433196A2	2	SPRING,
13	87442166	1	POPPET, VALVE, Inc. 14 ,15
14	637-63153	1	O-RING, Cl 6, 15.3MM ID x 2.2 Thk, 15,3 ID x 2,2
15	238-6012	1	O-RING, -012, 90 Duro, .364" ID x .070" Thk,
16	403356A1	1	GASKET,
17	397111A1	1	PLATE,
18	220056A1	3	SCREW, Hex Soc Flat Hd, M10 x 20, 8.8,

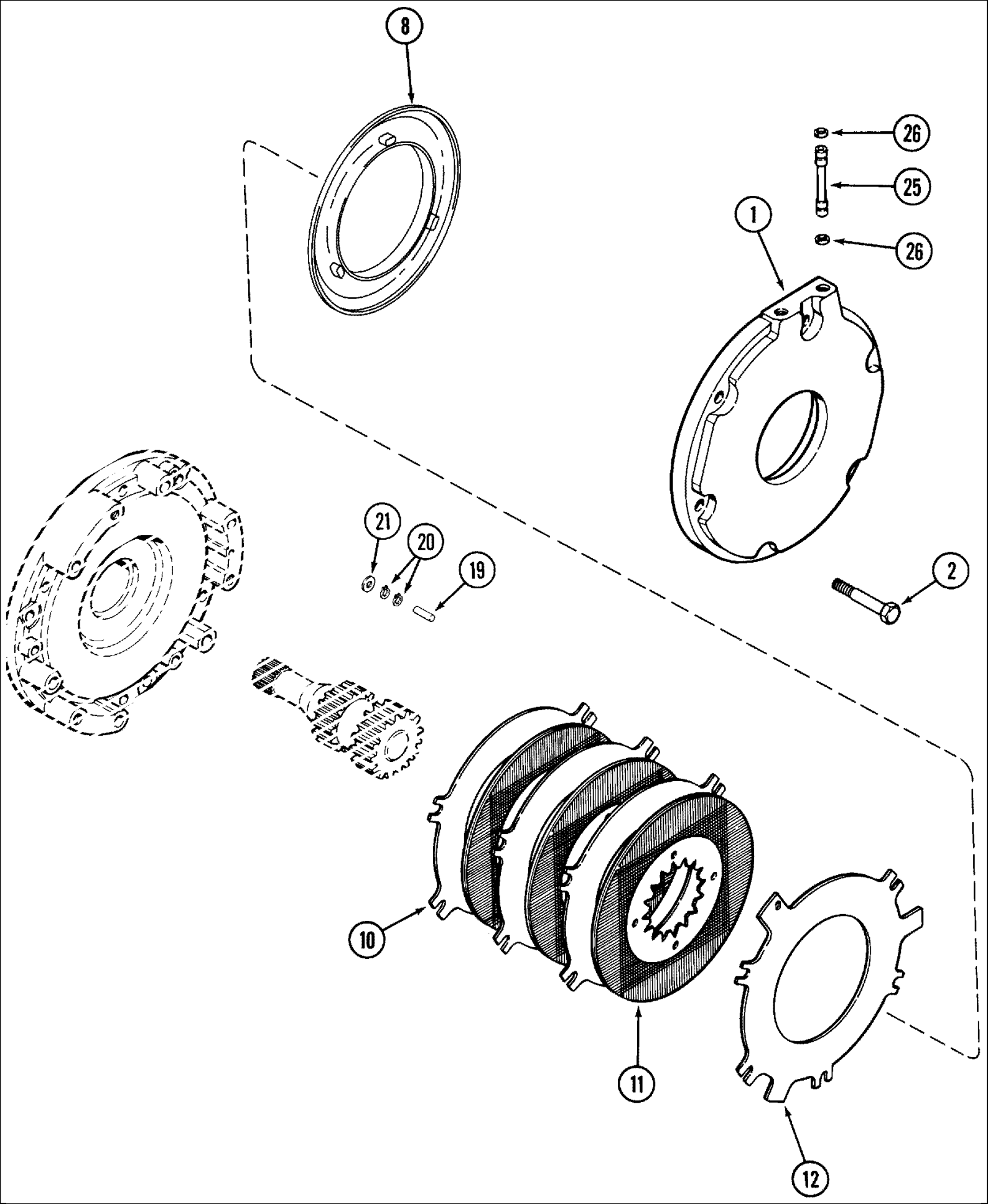
8
26
25
26
1
21
20
19
2
10
11
12

MX285 CASE IH MAGNUM TRACTOR (NORTH AMERICA)

07-06 BRAKES - DIFFERENTIAL

ссылка	Номер детали	Кол-во	Описание
1	1342723C2	2	COVER,
2	813-16110	6	BOLT, Hex, M16 x 110, 8.8, M16 x 110, 8.8, Right Hand
2	814-16100	6	BOLT, Hex, M16 x 100, 8.8, (LH)
8	1997422C1	2	PISTON,
10	120486C1	8	PLATE, BRAKE,
11	120488C2	8	PLATE, BRAKE,
12	1981187C1	2	PLATE,
	1349198C1	6	ADJUSTER, Inc. 19, 20
19	37-1828	1	DOWEL, 1/2" x 1 3/4", 1/2 x 1-3/4
20	100-1450	2	RING, SNAP, #50, Ext,
21	1342928C1	12	WASHER,
25	120514C2	4	TUBE,
26	238-5013	8	O-RING, -013, 70 Duro, .426" ID x .070" Thk,

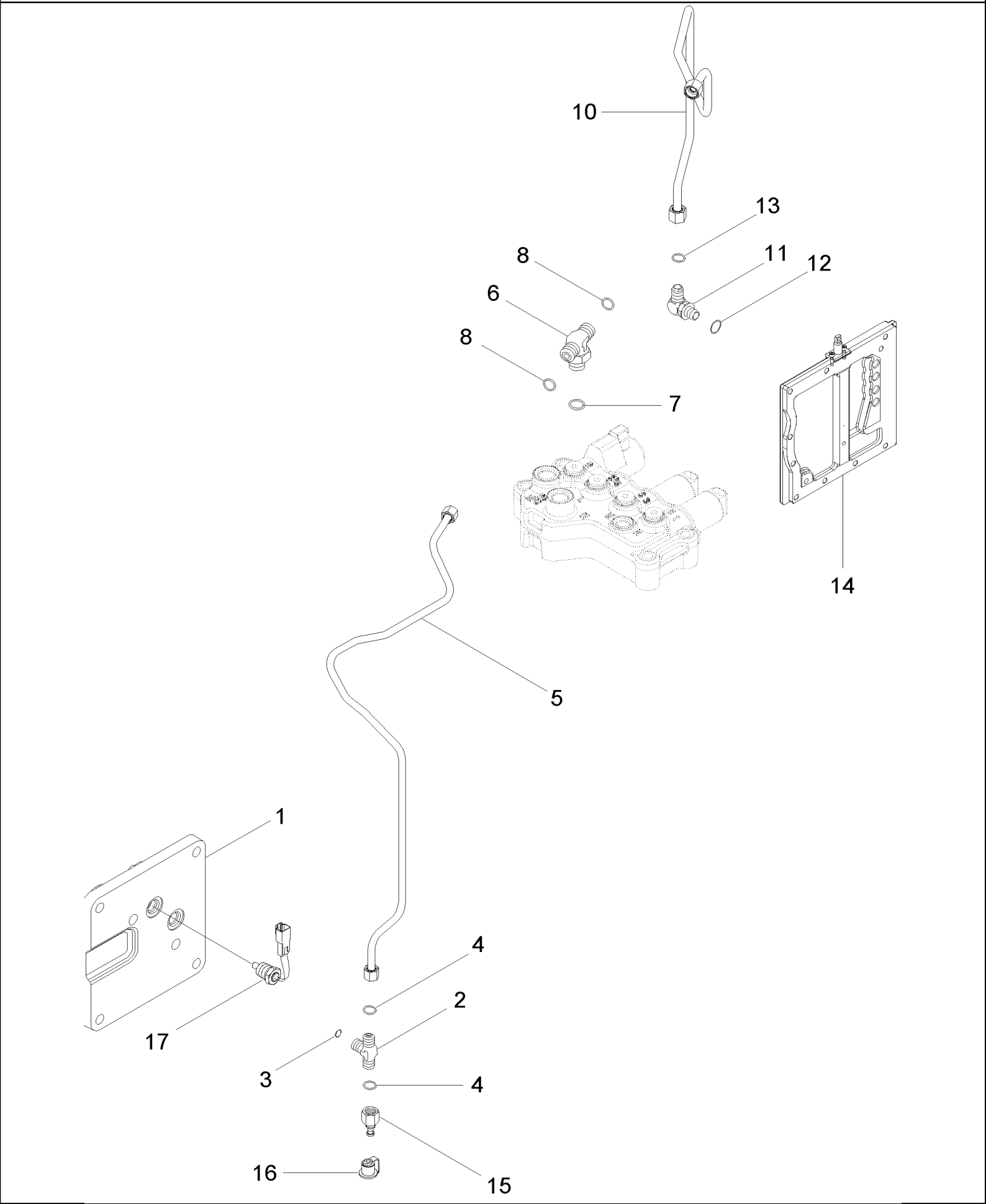
10
13
8
11
12
6
8
7
14
5
1
4
2
17
3
4
16
15

MX285 CASE IH MAGNUM TRACTOR (NORTH AMERICA)

07-07 PARK BRAKE - HYDRAULIC SYSTEM

ссылка	Номер детали	Кол-во	Описание
1	436285A1	1	COVER, , See Figure 07-08
2	700-443	1	TEE, 13/16"-16 ORFS x M14 x 1.5 ORB Br, 13/16 fc sl x 14 Or, Inc. 3, 4
3	637-63113	1	O-RING, Cl 6, 11.3MM ID x 2.2 Thk, 11,3 ID x 2,2
4	238-6014	2	O-RING, -014, 90 Duro, .489" ID x .070" Thk,
5	433595A2	1	TUBE ASSY., , BSN AJB0302120
5	433595A3	1	TUBE ASSY., , ASN AJB0302120
6	700-402	1	TEE, 13/16"-16 ORFS x M18 x 1.5 ORB Br, 13/16 fc sl x 18 Or, Inc. 7, 8
7	637-63153	1	O-RING, Cl 6, 15.3MM ID x 2.2 Thk, 15,3 ID x 2,2
8	238-6014	2	O-RING, -014, 90 Duro, .489" ID x .070" Thk,
10	448220A1	1	TUBE ASSY.,
11	700-326	1	ELBOW, 90є, 13/16"-18 ORFS x M22 x 1.5 ORB, 13/16 fc sl x 22 Or, Inc. 12,13
12	637-63193	1	O-RING, Cl 6, 19.3MM ID x 2.2 Thk, 19,3 ID x 2,2
13	238-6014	1	O-RING, -014, 90 Duro, .489" ID x .070" Thk,
14	445535A2	1	PLATE ASSY., , See Figure 06-06
15	322529A1	1	COUPLING,
16	143349A1	1	CAP,
17	397240A1	1	SENDOR, TEMPERATURE, Transmission

MX285 CASE IH MAGNUM TRACTOR (NORTH AMERICA)

07-08 PARK BRAKE - BRAKE ASSEMBLY

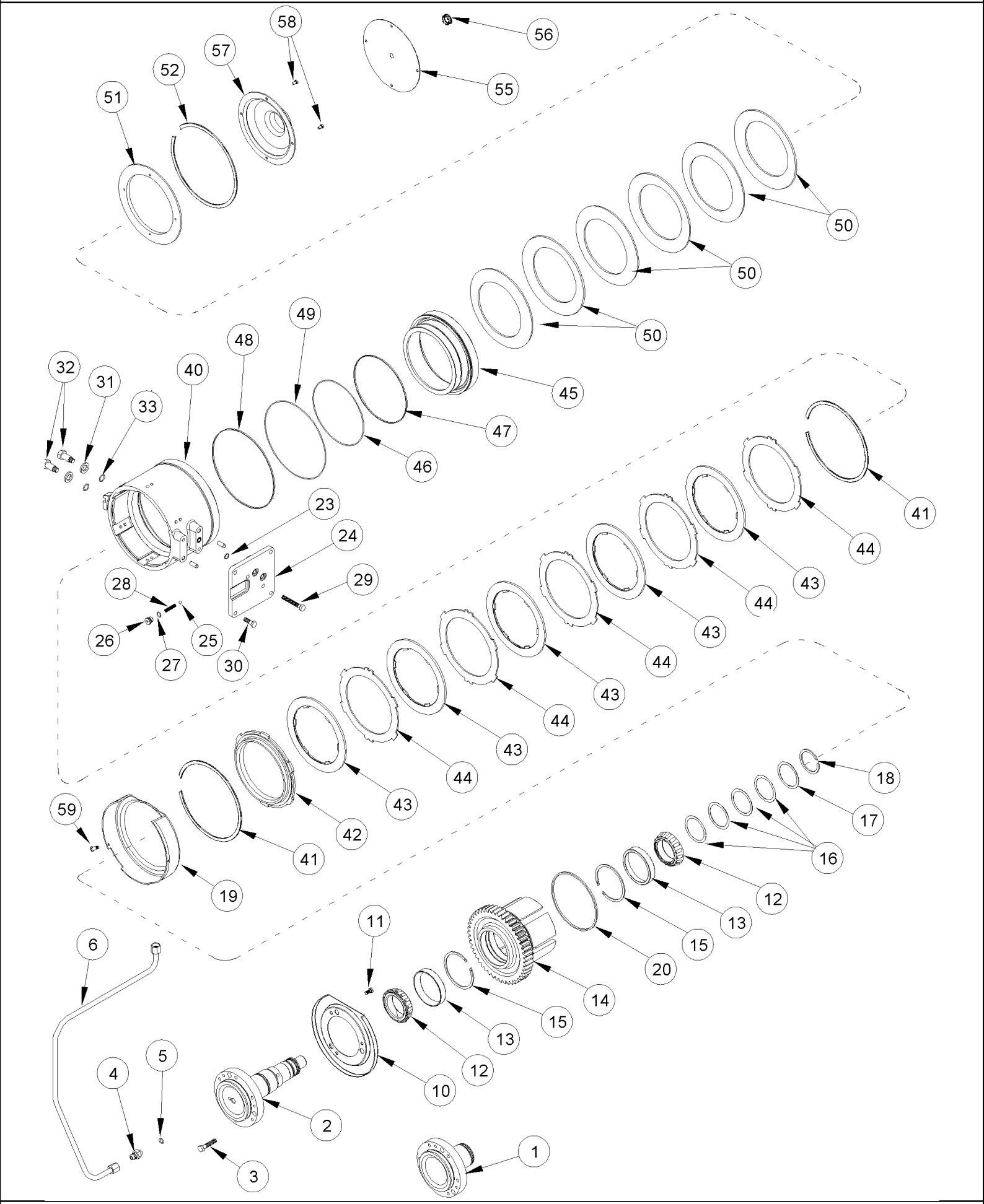

MX285 CASE IH MAGNUM TRACTOR (NORTH AMERICA)

07-08 PARK BRAKE - BRAKE ASSEMBLY

ссылка	Номер детали	Кол-во	Описание
1	255426A2	1	SHAFT, , Without Mechanical Front Drive
2	199320A1	1	SHAFT, , With Mechanical Front Drive
3	813-10050	6	BOLT, Hex, M10 x 50, 8.8, M10 x 50; 8
4	218-5351	1	CONNECTOR, HYD., 3/4"-16, 37є x 9/16"-18, O-Ring, 3/4 fl x 9/16 Or, Inc. 5
6	124306A1	1	PIPE,
10	1997881C1	1	SHIELD,
11	806-8016	3	BOLT, Hex, Lock, M8 x 16, Cl 10.9, M8 x 16; 10.9
12	630694C1	2	BEARING, CONE,
13	630695C1	2	BEARING, CUP,
14	222856A1	1	PINION,
15	101-21412	2	RING, SNAP, #412, 4.430", Int, No. 412
16	138121A1	AR	SHIM, 0,20 mm
16	1997893C1	AR	SHIM, 0,51 mm
16	1997894C1	AR	SHIM, 0,56 mm
16	1997895C1	AR	SHIM, 0,64 mm
17	1277309C1	1	WASHER,
18	1997891C1	1	RING, SNAP,
19	117853A1	1	HOUSING,
20	198853A1	1	GASKET,
23	238-5014	1	O-RING, -014, 70 Duro, .489" ID x .070" Thk,
24	436285A1	1	COVER, Inc. 25 - 28
25	511-1070	1	BALL, 7mm Dia, 7 mm
26	221576A1	1	PLUG, Hex Soc, M14 x 1.5, ORB, M14 Or, Inc. 27
27	637-63113	1	O-RING, Cl 6, 11.3MM ID x 2.2 Thk, 11,3 ID x 2,2
28	255404A3	1	SPRING,
29	628-10030	4	BOLT, Hex, M10 x 30, 10.9, Full Thd, M10 x 30; 10.9
30	828-10070	2	BOLT, Hex, M10 x 70, 10.9, M10 x 70; 10.9
31	896-12016	2	WASHER, M17.5 x 30 x 4, HT, 17,5 x 30 x 4 mm
32	198336A1	2	SCREW,
33	238-5114	2	O-RING, -114, 70 Duro, .612" ID x .103" Thk,
40	195066A3	1	CARRIER,
41	198502A1	2	SNAP RING,
42	195068A2	1	PLATE,
43	118421A1	5	BRAKE DISC,
44	195067A2	5	PLATE,
45	195069A2	1	PISTON,
46	238-7169	1	O-RING, -169, Cl 7, 7.487" ID x .103" Thk,
47	198684A1	1	SEALRING,
48	238-7175	1	O-RING, -175, Cl 7, 8.897" ID x .109" Thk, 9 ID x 3/32
49	198685A1	1	SEALRING,
50	195118A1	6	WASHER,
51	284935A1	1	PLATE, BACKING,
52	198501A1	1	SNAP RING,
55	296409A3	1	PLATE, , Without Mechanical Front Drive
56	311910A1	1	PLUG,

MX285 CASE IH MAGNUM TRACTOR (NORTH AMERICA)

07-08 PARK BRAKE - BRAKE ASSEMBLY

ссылка	Номер детали	Кол-во	Описание
57	296268A1	1	GUARD, , With Mechanical Front Drive
58	806-6010	4	BOLT, Hex, Lock, M6 x 10, Cl 10.9, M6 x 10; 10.9
59	782-84413	3	SCREW, SELF TAP, Hex Wash Hd, M4.8 x 13, M4,8 X 13
5	237-6006	1	O-RING, 6-1, 90 Duro, .468" ID x .078" Thk,

MX285 CASE IH MAGNUM TRACTOR (NORTH AMERICA)

07-09 PARK BRAKE - RELEASE, BSN AJB0355923

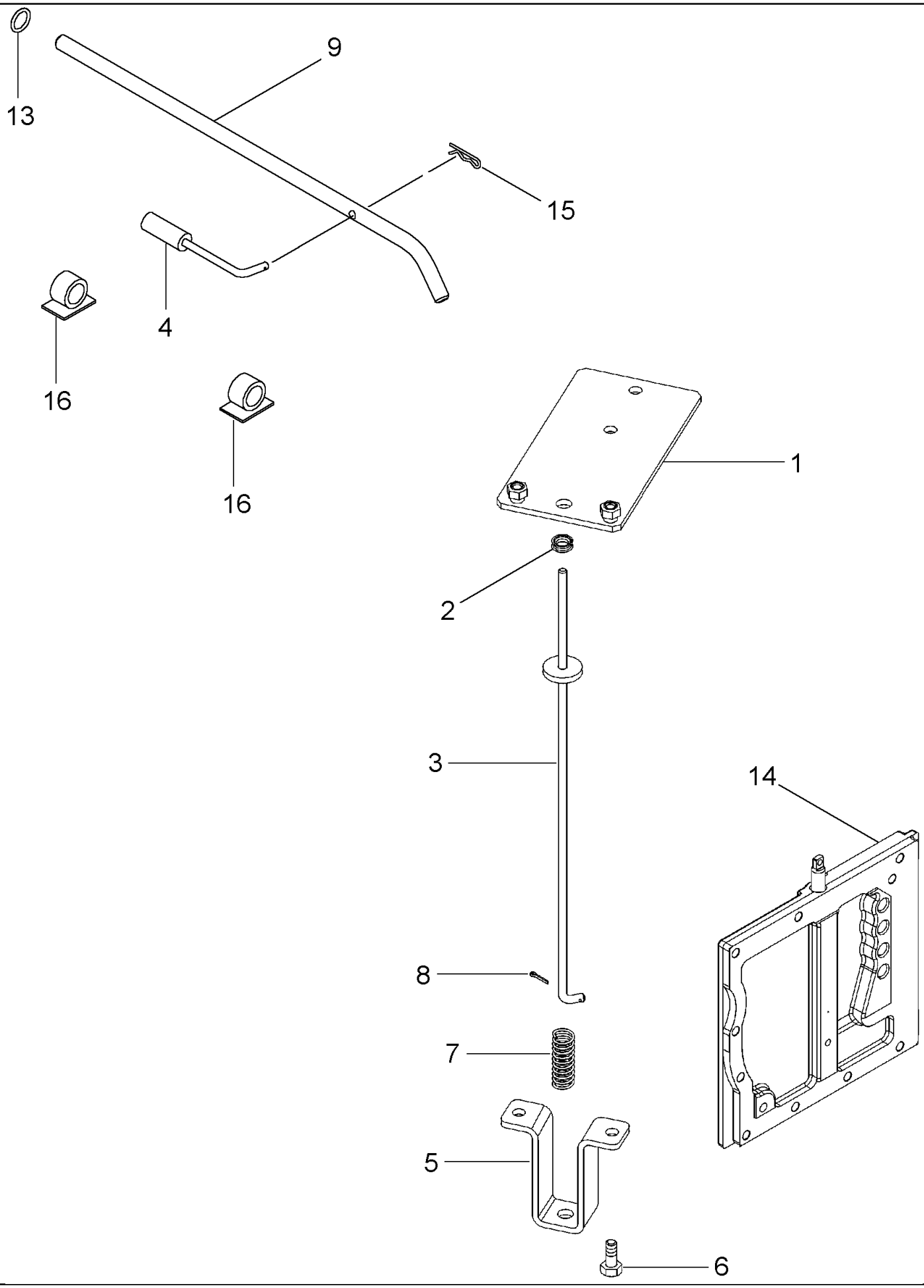

MX285 CASE IH MAGNUM TRACTOR (NORTH AMERICA)

07-09 PARK BRAKE - RELEASE, BSN AJB0355923

ссылка	Номер детали	Кол-во	Описание
1	283465A1	1	PLATE,
2	248-2164	1	GROMMET, 1/4" ID x 7/16" Groove Dia, 1/4 ID
3	282625A1	1	ROD,
4	279765A3	1	PISTON,
5	282624A1	1	SUPPORT,
6	627-8020	4	BOLT, Hex, M8 x 20, 10.9, M8 x 20; 10.9
7	282456A1	1	SPRING,
8	432-48	1	PIN, SPLIT (COTTER), 1/16" x 1/2", 1/16" x 1/2"
9	279763A2	1	BRAKE LEVER, Release
13	638-53160	1	O-RING, Cl 5, 16MM ID x 2.65 Thk, 16 ID x 2,65
14	445535A2	1	PLATE ASSY., , See Figure 06-06, BSN AJB0304805
14	87433653	1	PLATE ASSY., , See Figure 06-06, ASN AJB0304805
15	136-159	1	PIN, SPLIT (COTTER), Int, 3/16 x .080", 3/16 x 1-27/64
16	169850C2	2	ANCHOR,

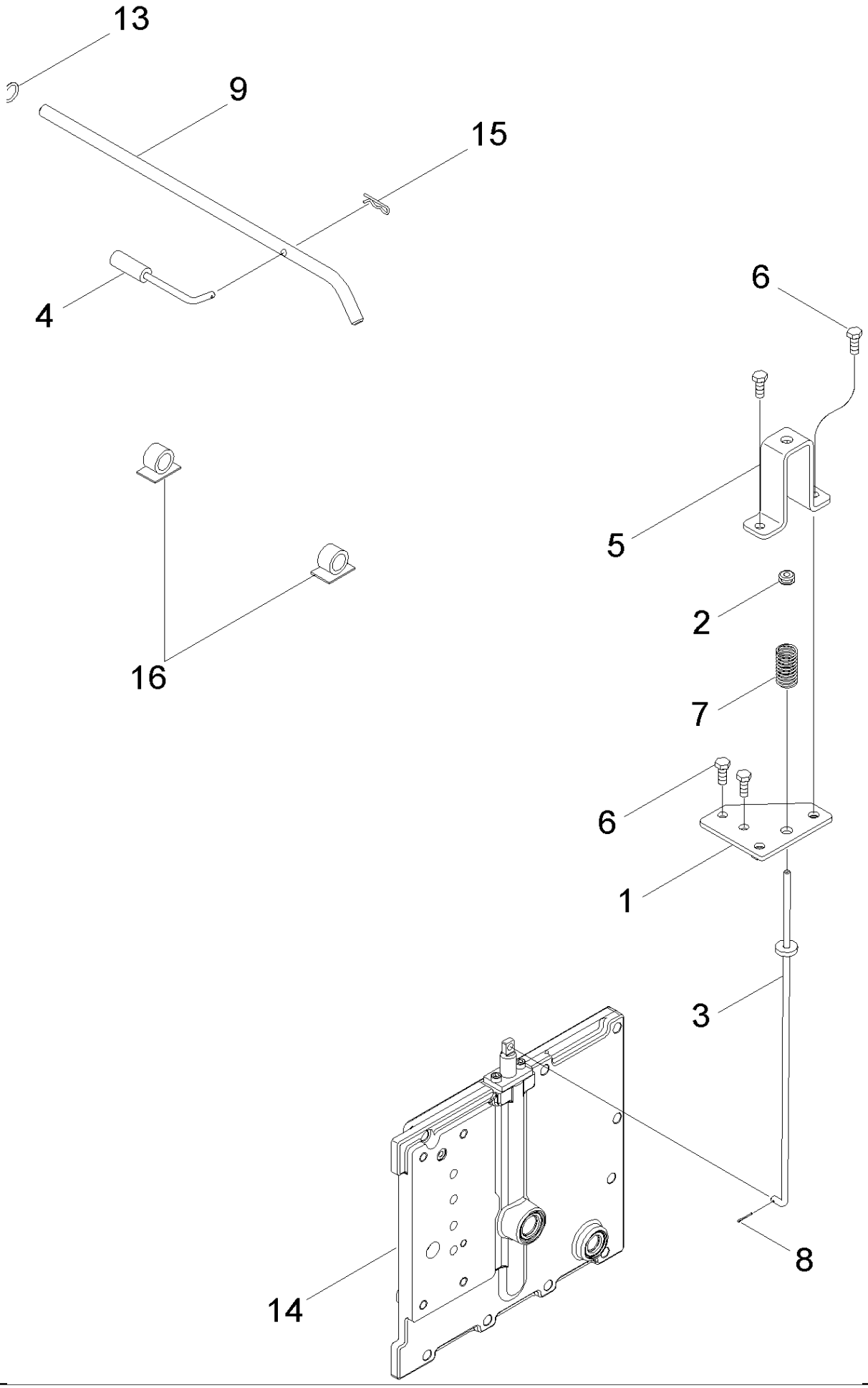
13
9
15
4
16
6
5
2
7
6
1
3
14
8

MX285 CASE IH MAGNUM TRACTOR (NORTH AMERICA)

07-10 PARK BRAKE - RELEASE, ASN AJB0355923

ссылка	Номер детали	Кол-во	Описание
1	87435703	1	PLATE,
2	248-2164	1	GROMMET, 1/4" ID x 7/16" Groove Dia, 1/4 ID
3	87440038	1	ROD,
4	279765A3	1	PISTON,
5	282624A1	1	SUPPORT,
6	627-8020	4	BOLT, Hex, M8 x 20, 10.9, M8 x 20; 10.9
7	282456A1	1	SPRING,
8	432-48	1	PIN, SPLIT (COTTER), 1/16" x 1/2", 1/16" x 1/2"
9	279763A2	1	BRAKE LEVER, Release
13	638-53160	1	O-RING, Cl 5, 16MM ID x 2.65 Thk, 16 ID x 2,65
14	87433653	1	PLATE ASSY., , See Figure 06-06
15	136-159	1	PIN, SPLIT (COTTER), Int, 3/16 x .080", 3/16 x 1-27/64
16	169850C2	2	ANCHOR,

07-11 TRAILER BRAKES - HYDRAULIC

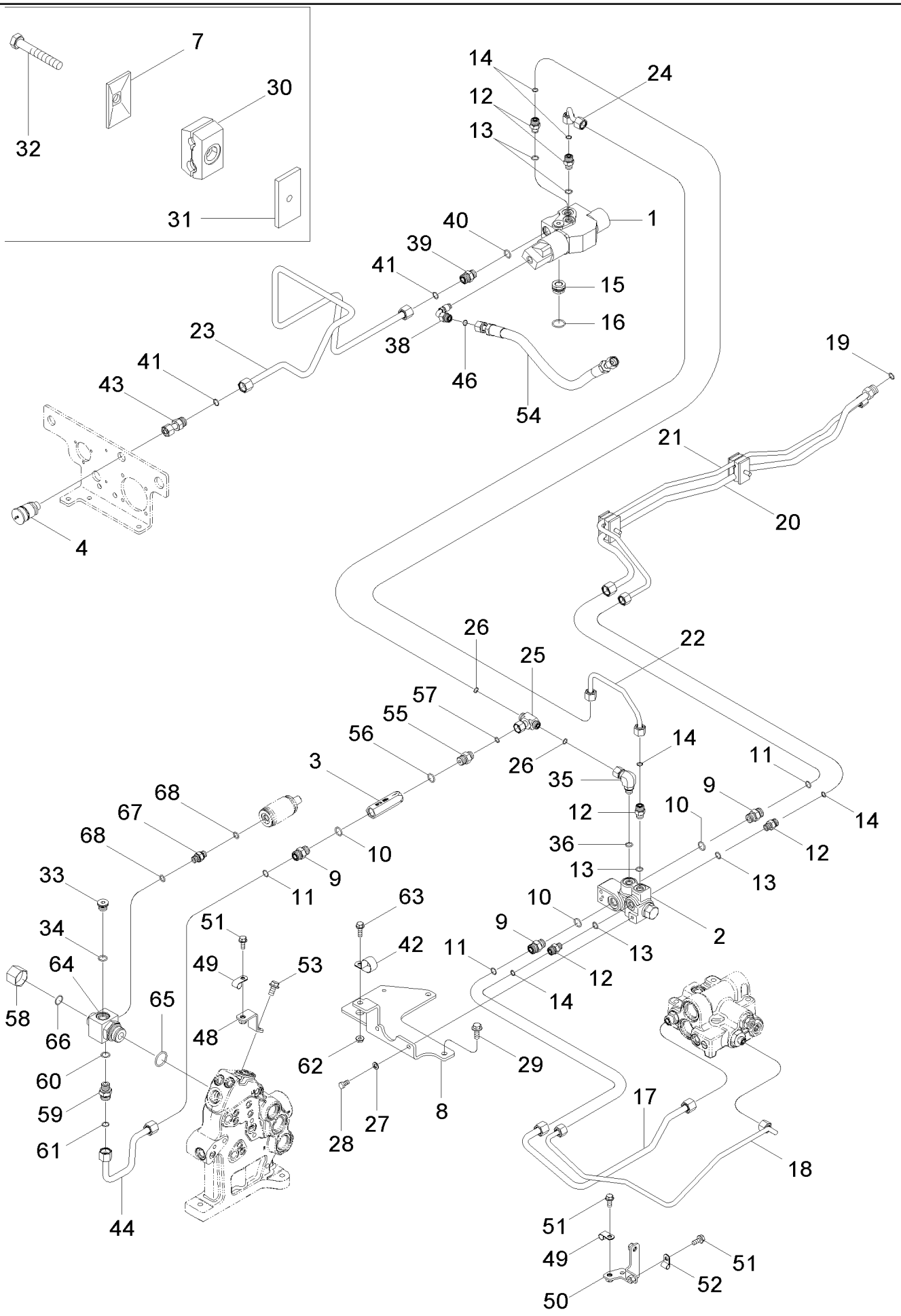

MX285 CASE IH MAGNUM TRACTOR (NORTH AMERICA)

07-11 TRAILER BRAKES - HYDRAULIC

ссылка	Номер детали	Кол-во	Описание
1	86991384	1	VALVE, Trailer Brake
2	1533774C2	1	VALVE, HYDRAULIC, Priority
3	1348540C1	1	VALVE, CHECK, Check
4	3131463R91	1	BREAKER POINTS,
7	384870A1	2	PLATE,
8	87403709	1	BRACKET,
9	201-102	3	CONNECTOR, HYD., 13/16"-16 ORFS x 3/4"-16 ORB, 13/16 fc sl x 3/4 Or, Inc. 10, 11
10	237-6008	1	O-RING, 8-1, 90 Duro, .644" ID x .087" Thk,
11	238-6014	1	O-RING, -014, 90 Duro, .489" ID x .070" Thk,
12	201-101	5	CONNECTOR, HYD., 11/16"-18 ORFS x 9/16"-18 ORB, 11/16 fc sl x 9/16 Or, Inc. 13, 14
13	237-6006	1	O-RING, 6-1, 90 Duro, .468" ID x .078" Thk,
14	238-6012	1	O-RING, -012, 90 Duro, .364" ID x .070" Thk,
15	434093A1	1	ADAPTER, Inc. 16
16	238-5119	1	O-RING, -119, 70 Duro, .924" ID x .103" Thk,
17	86985133	1	TUBE ASSY., Steering Supply
18	451058A1	1	TUBE ASSY., Steering Sensor
19	238-6014	1	O-RING, -014, 90 Duro, .489" ID x .070" Thk,
20	433945A1	1	TUBE ASSY., Steering Supply
21	433946A1	1	TUBE ASSY., Steering Sensor
22	434000A1	1	TUBE ASSY., Trailer Brake Pilot
23	87410305	1	TUBE ASSY., Trailer Brake Coupler
24	87403710	1	TUBE ASSY., Trailer Brake Priority
25	201-434	1	TEE, 11/16"-18 ORFS x 11/16"-18 Sw Br, 11/16 fc sl x 11/16 sw, Inc. 26
26	237-6012	1	O-RING, 12-1, 90 Duro, .924 ID x .118" Thk,
27	895-11008	2	WASHER, M8 x 16 x 1.6, 9 x 16 x 1,6 mm
28	614-8016	2	BOLT, Hex, M8 x 16, 8.8,
29	844-10025	2	BOLT, Hex Flg, M10 x 25, 8.8, Full Thd, M10 x 25; 8.8
30	363255A1	2	CLAMP,
31	384871A1	2	PLATE,
32	814-8055	2	BOLT, Hex, M8 x 55, 8.8, M8 x 55; 8.8
33	221578A1	1	PLUG, Hex Soc, M18 x 1.5, ORB, Inc. 34
34	637-63153	2	O-RING, Cl 6, 15.3MM ID x 2.2 Thk, 15,3 ID x 2,2
35	201-322	1	ELBOW, 90є, 9/16"-18 Adj x 9/16"-18 Fem Sw, ORFS, 9/16 Or x 11/16 sw, Inc 36
36	237-6006	1	O-RING, 6-1, 90 Duro, .468" ID x .078" Thk,
38	1975290C1	1	ELBOW, Brake Supply
39	1975213C2	1	ADAPTER, 13/16 fc sl x 18 Or, Inc. 40, 41
40	637-63153	1	O-RING, Cl 6, 15.3MM ID x 2.2 Thk, 15,3 ID x 2,2
41	238-6014	1	O-RING, -014, 90 Duro, .489" ID x .070" Thk,
42	515-23286	1	CLAMP, 1 1/8", Insul, 3/8" Bolt, 1-1/8 ID
43	1975266C1	1	CONNECTOR, HYD.,
44	87403711	1	TUBE ASSY., Trailer Brake Supply
48	443761A1	1	BRACKET,
49	515-22127	2	CLAMP, 1/2", Insul, 5/16" Bolt, 1/2 ID
50	86985131	1	BRACKET,
51	844-8020	4	BOLT, Hex Flg, M8 x 20, 8.8,

MX285 CASE IH MAGNUM TRACTOR (NORTH AMERICA)

07-11 TRAILER BRAKES - HYDRAULIC

ссылка	Номер детали	Кол-во	Описание
52	515-2295	1	CLAMP, 3/8", Insul, 5/16" Bolt, 3/8 ID
53	844-10020	1	BOLT, Hex Flg, M10 x 20, 8.8,
54	87403804	1	HOSE, FLEXIBLE,
55	201-106	1	CONNECTOR, HYD., 11/16"-16 ORFS x 3/4"-16 ORB, 11/16 fc sl x 3/4 Or, Inc. 56, 57
56	237-6008	1	O-RING, 8-1, 90 Duro, .644" ID x .087" Thk,
57	238-6012	1	O-RING, -012, 90 Duro, .364" ID x .070" Thk,
58	701-907	1	CAP, 1 3/16"-12 ORFS, 1-3/16
59	700-102	1	CONNECTOR, HYD., 13/16"-16 ORFS x M18 x 1.5 ORB, 13/13 fc sl x 14 Or, Inc. 60, 61
60	637-63153	1	O-RING, Cl 6, 15.3MM ID x 2.2 Thk, 15,3 ID x 2,2
61	238-6014	1	O-RING, -014, 90 Duro, .489" ID x .070" Thk,
62	825-2408	1	NUT, M8 x 1.25, Flg, Cl 8,
63	844-8025	1	BOLT, Hex Flg, M8 x 25, 8.8, M8 x 25; 8.8
64	87402551	1	TEE, Inc. 65, 66
65	637-64296	1	O-RING, Cl 6, 29.6MM ID x 2.9 Thk, 29,6 ID x 2,9
66	238-6018	1	O-RING, -018, 90 Duro, .739" ID x .070" Thk,
67	87403003	1	CONNECTOR, HYD., 14 Or x 14 Or, Inc. 68
68	637-63113	2	O-RING, Cl 6, 11.3MM ID x 2.2 Thk, 11,3 ID x 2,2

MX285 CASE IH MAGNUM TRACTOR (NORTH AMERICA)

07-12 TRAILER BRAKES - PNEUMATIC, AIR COMPRESSOR MOUNTING AND DRIVE

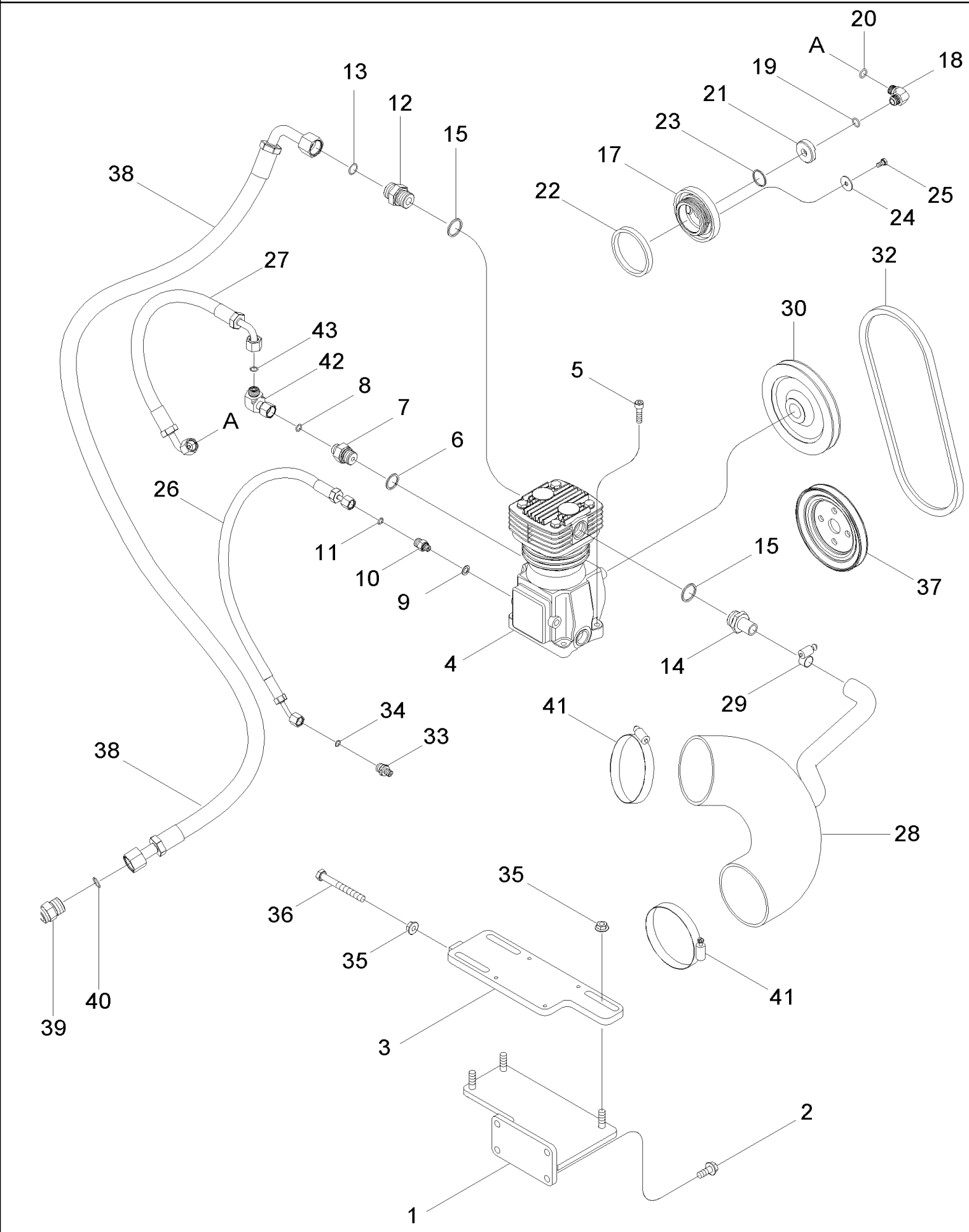

MX285 CASE IH MAGNUM TRACTOR (NORTH AMERICA)

07-12 TRAILER BRAKES - PNEUMATIC, AIR COMPRESSOR MOUNTING AND DRIVE

ссылка	Номер детали	Кол-во	Описание
1	414808A3	1	SUPPORT,
2	844-10025	4	BOLT, Hex Flg, M10 x 25, 8.8, Full Thd, M10 x 20; 8.8
3	433713A1	1	PLATE ASSY.,
4	228439A1	1	COMPRESSOR,
5	864-8030	4	SCREW, Hex Soc Hd, M8 x 30, 8.8, M8 x 30; 8.8
6	E135040	1	WASHER, SEALING, M22 x 27 x 1.5,
7	224236A1	1	FITTING, Inc. 8
8	238-6012	1	O-RING, -012, 90 Duro, .364" ID x .070" Thk,
9	718743R1	1	WASHER, SEALING, M10 x 16 x 1,
10	176896A1	1	UNION, 9/16 fc sl x 10 Or, Inc. 11
11	238-6011	1	O-RING, -011, 90 Duro, .301" ID x .070" Thk,
12	224234A2	1	FITTING, Includes 13
13	238-6016	1	O-RING, -016, 90 Duro, .614" ID x .070" Thk,
14	897502H1	1	ADAPTER,
15	933608R1	2	WASHER, SEALING, M26 x 31 x 2, 26 x 31 mm
17	J918215	1	ADAPTER,
18	201-304	1	ELBOW, 90є, 11/16"-16 x 9/16"-18 Adj, ORFS, 11/16 fc sl x 9/16 Or, Inc. 19, 20
20	238-6012	1	O-RING, -012, 90 Duro, .364" ID x .070" Thk,
21	177335A3	1	PLATE, LARGE,
22	J903475	1	SEAL,
23	J915800	1	O-RING,
24	T103887	2	WASHER,
25	614-6012	2	BOLT, Hex, M6 x 12, 8.8, M6 x 12; 8,8
26	87404446	1	HOSE ASSY.,
27	87416363	1	HOSE ASSY.,
28	435713A1	1	HOSE,
29	214-1412	1	CLAMP, HOSE, #12, 0.69/1.25 Type F Worm,
30	191348A1	1	PULLEY,
32	86989142	1	V-BELT,
33	700-171	1	CONNECTOR, HYD., 9/16"-18 ORFS x M10 x 1 ORB, Inc. 34
34	238-6011	1	O-RING, -011, 90 Duro, .301" ID x .070" Thk,
35	825-2410	4	NUT, M10 x 1.5, Flg, Cl 8, M10
36	614-10090	1	BOLT, Hex, M10 x 90, 8.8, Full Thd, M10 x 90; 8.8
37	431716A1	1	PULLEY,
38	87405124	1	HOSE,
39	86991153	1	ADAPTER, Inc. 40
40	238-6016	1	O-RING, -016, 90 Duro, .614" ID x .070" Thk,
41	214-3280	2	CLAMP, HOSE, 5.25/5.125 HD Worm, W/liner, 4-1/4 - 5-1/8
42	201-319	1	ELBOW, 90є, 11/16"-16 x 1/16"-16 Fem Sw ORFS,
43	238-6012	1	O-RING, -012, 90 Duro, .364" ID x .070" Thk,
19	237-6006	1	O-RING, 6-1, 90 Duro, .468" ID x .078" Thk,

MX285 CASE IH MAGNUM TRACTOR (NORTH AMERICA)

07-13 TRAILER BRAKES - PNEUMATIC, RESERVOIR

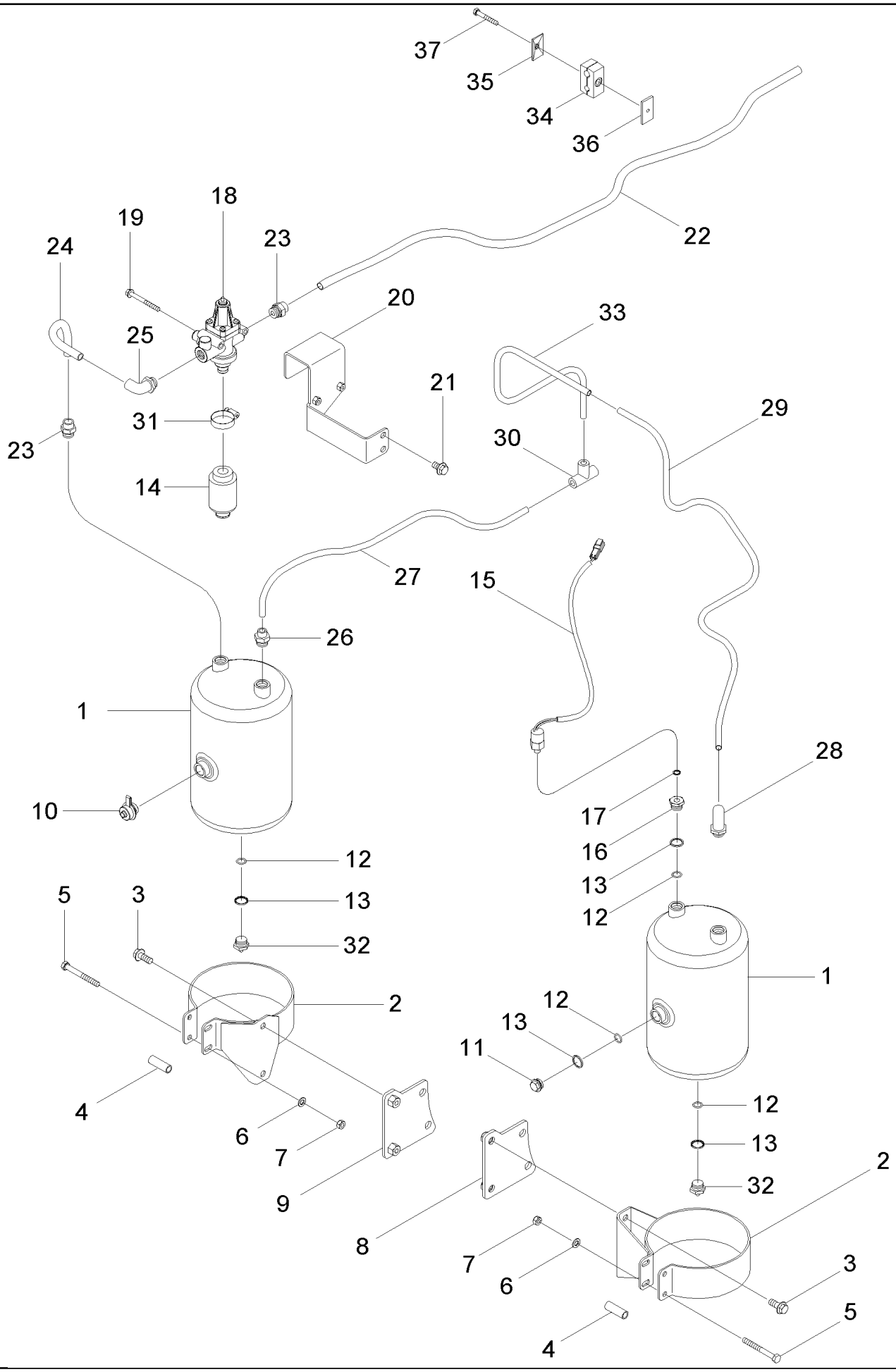

MX285 CASE IH MAGNUM TRACTOR (NORTH AMERICA)

07-13 TRAILER BRAKES - PNEUMATIC, RESERVOIR

ссылка	Номер детали	Кол-во	Описание
1	1530988C1	2	TANK, AIR,
2	86985993	2	BRACKET,
3	844-12030	4	BOLT, Hex Flg, M12 x 30, 8.8, M12 x 30; 8.8
4	446035A1	4	SPACER,
5	814-10075	4	BOLT, Hex, M10 x 75, 8.8, M10 x 75; 8.8
6	895-11010	4	WASHER, M10 x 20 x 2, 11 x 20 x 2 mm
7	829-1410	4	NUT, M10, Cl 10, M10; 10.9
8	86985963	1	BRACKET, Right Hand
9	86985965	1	BRACKET, Left Hand
10	443287A1	1	VALVE,
11	716954R1	1	PLUG, Hex, M22 x 1.5,
12	3076154R1	4	O-RING,
13	3076153R1	4	RING, THRUST,
14	82001979	1	VALVE, HYDRAULIC, Silencer
15	400669A1	1	SWITCH,
16	186382A1	1	REDUCER,
17	713845R1	1	WASHER, SEALING, M12 x 15.5 x 1.5,
18	82001015	1	VALVE, HYDRAULIC, Unloader
19	844-8080	2	BOLT, Hex Flg, M8 x 80, 8.8, M8 x 80; 8.8
20	86985966	1	BRACKET,
21	844-12020	2	BOLT, Hex Flg, M12 x 20, 8.8, Full Thd,
22	86991154	1	HOSE, Unloader Valve Supply
23	86984484	2	CONNECTION,
24	86985957	1	HOSE,
25	442930A1	1	ELBOW,
26	442924A1	1	CONNECTOR, HYD.,
27	86985952	1	HOSE,
28	442929A1	1	ELBOW,
29	86985955	1	HOSE,
30	442925A1	1	TEE,
31	214-1536	1	CLAMP, HOSE, #36, 1.81/2.75 Type F Worm, W/liner,
32	897123H2	2	VALVE,
33	86985951	1	HOSE,
34	109619A1	2	ANCHOR,
35	384870A1	2	PLATE,
36	384871A1	2	PLATE,
37	814-8055	2	BOLT, Hex, M8 x 55, 8.8, M8 x 55; 8.8

07-14 TRAILER BRAKES - PNEUMATIC, VALVES

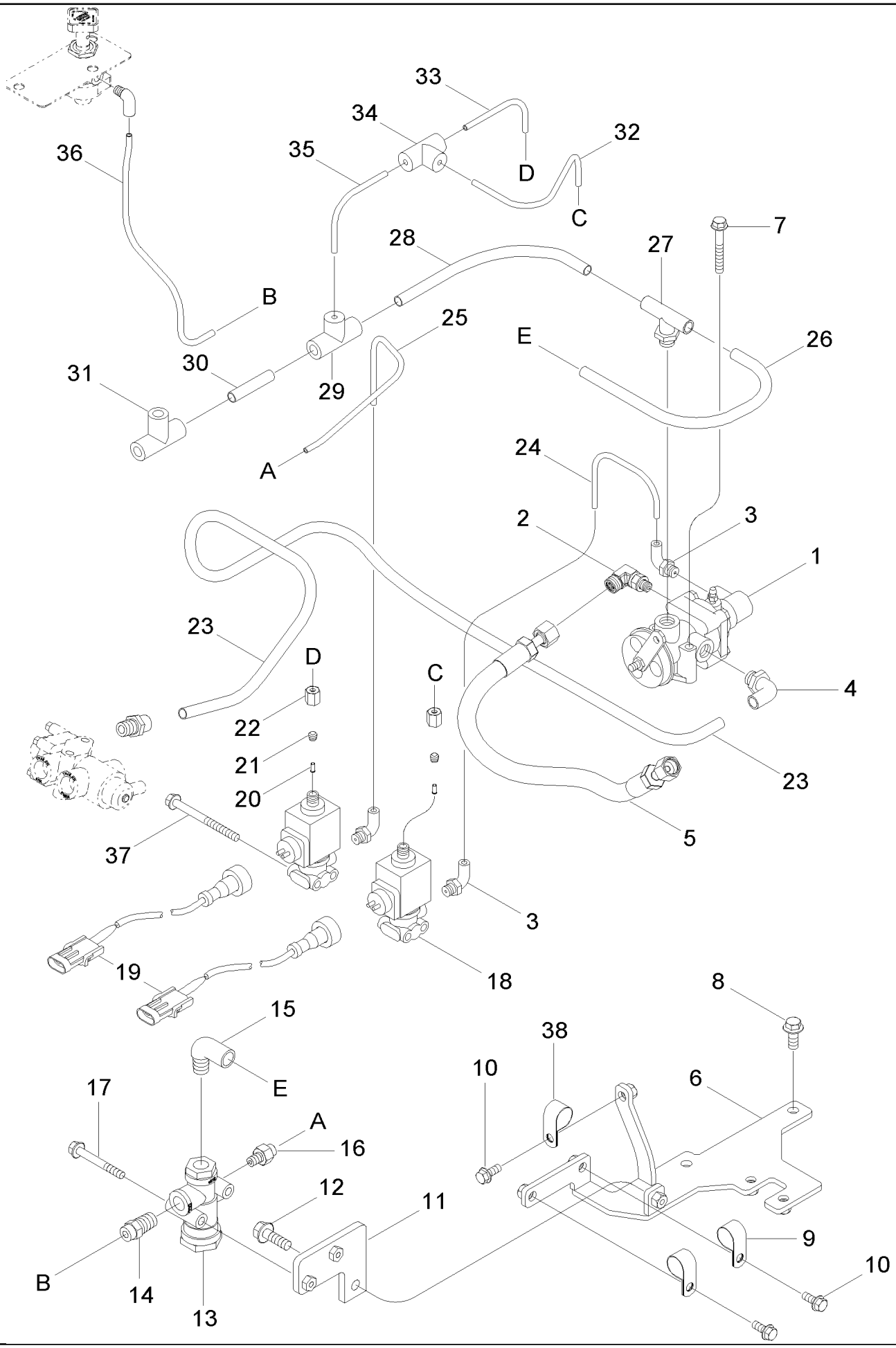

MX285 CASE IH MAGNUM TRACTOR (NORTH AMERICA)

07-14 TRAILER BRAKES - PNEUMATIC, VALVES

ссылка	Номер детали	Кол-во	Описание
1	224360A1	1	VALVE, Dual Line Control
2	86984486	1	ELBOW, M10 x 11/16
3	442927A1	3	ELBOW, Push-in, M12 x 6
4	442928A1	2	ELBOW, Push-in, M16 x 12
5	86985956	1	HOSE,
6	86987547	1	BRACKET,
7	844-8060	2	BOLT, Hex Flg, M8 x 60, 8.8, M8 x 60; 8.8
8	844-10025	2	BOLT, Hex Flg, M10 x 25, 8.8, Full Thd, M10 x 25; 8.8
9	515-23238	2	CLAMP, 15/16", Insul, 3/8" Bolt, 15/16
10	844-8020	3	BOLT, Hex Flg, M8 x 20, 8.8,
11	87411914	1	PLATE, MOUNTING, Valve
12	844-8025	1	BOLT, Hex Flg, M8 x 25, 8.8, M8 x 25
13	87423207	1	VALVE, PNEUMATIC,
14	87411427	1	FITTING,
15	87411442	1	ELBOW,
16	87411443	1	FITTING,
17	844-6050	2	BOLT, Hex Flg, M6 x 50, 8.8, M6 x 50
18	1531984C1	2	VALVE, SOLENOID,
19	327970A1	2	PLUG,
20	1531863C1	2	SLEEVE,
21	3138533R1	2	SLEEVE,
22	3138527R1	2	NUT, Coupling, M12 x 1.5,
23	87411893	1	HOSE,
24	86985948	1	HOSE,
25	86985949	1	HOSE,
26	87411885	1	HOSE,
27	87411428	1	TEE, Push-in, M16 x 12
28	86985944	1	HOSE,
29	442926A1	1	TEE, Push-in, 12 x 12 x 6
30	86985943	1	HOSE,
31	442925A1	1	TEE, Push-in, 12 x 12 x 12
32	86987483	1	HOSE,
33	86985947	1	HOSE,
34	86987467	1	TEE, Push-in, 6 x 6 x 6
35	86985946	1	HOSE,
36	87422504	1	HOSE,
37	845-8095	2	BOLT, Hex Flg, M8 x 95, 8.8, M8 x 95; 8.8
38	515-23159	1	CLAMP, 5/8", Insul, 3/8" Bolt,

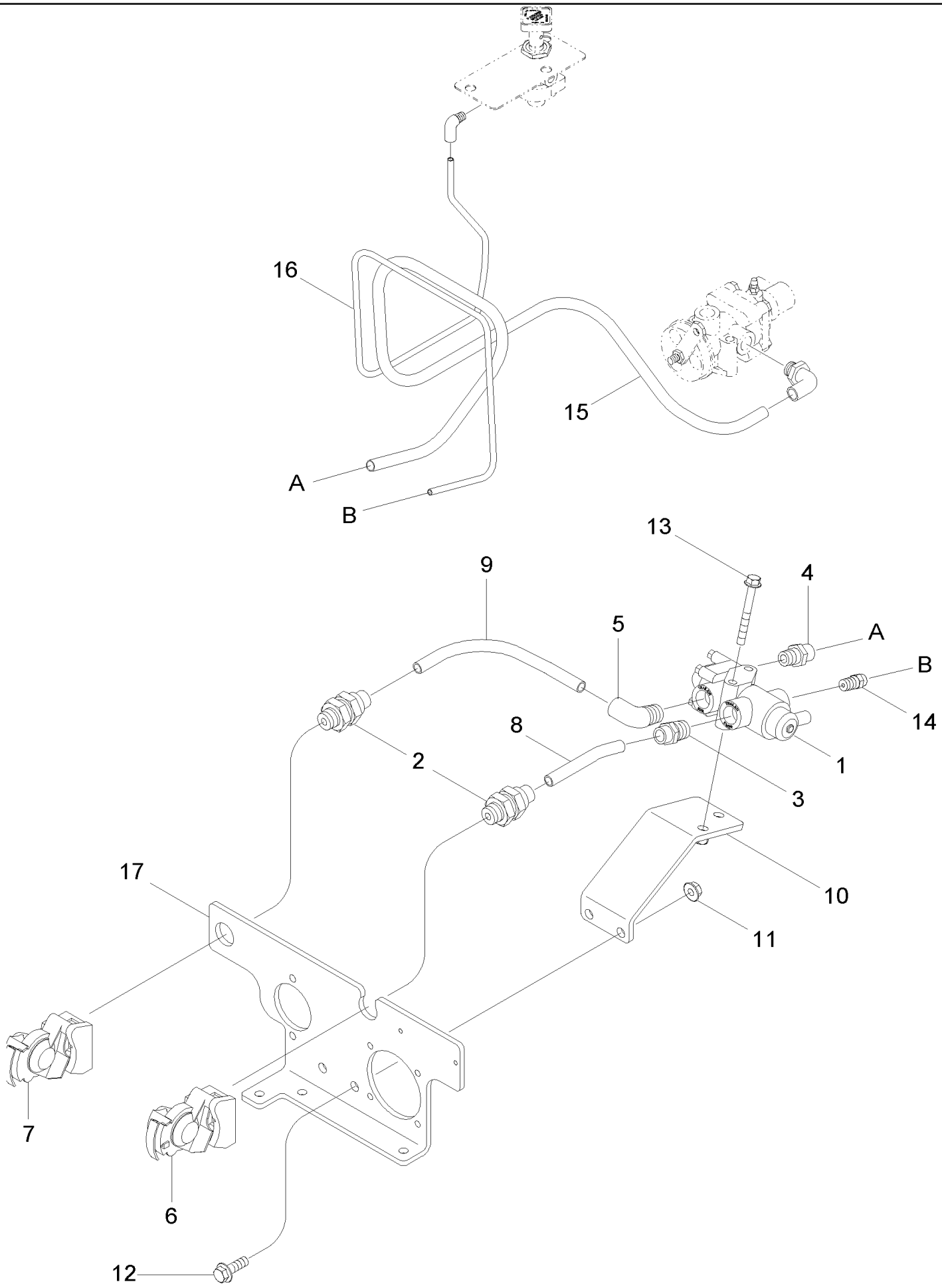
16
15
A
B
13
9
4
5
A
B
14
8
2
1
3
17
10
11
7
6
12

MX285 CASE IH MAGNUM TRACTOR (NORTH AMERICA)

07-15 TRAILER BRAKES - PNEUMATIC, COUPLERS

ссылка	Номер детали	Кол-во	Описание
1	87409383	1	VALVE, PNEUMATIC, Tractor Protection
2	87411311	2	CONNECTOR, HYD., Bulkhead, 1/2 npt x 1/2 Tube
3	87411513	1	CONNECTOR, HYD., Air Brake, Push-in, 1/2 npt x 1/2 Tube
4	87411845	1	CONNECTOR, HYD., 3/8 npt x 1/2 Tube
5	87411504	1	ELBOW, Air Brake, Push-in, 1/2 npt x 1/2 Tube
6	87409385	1	COUPLING, Emergency, Red
7	87409386	1	COUPLING, Service, Blue
8	87411888	1	HOSE, Emergency Coupler Supply
9	87411889	1	HOSE, Service Coupler Supply
10	87411890	1	BRACKET, Tractor Protection Valve
11	825-2410	2	NUT, M10 x 1.5, Flg, Cl 8, M10
12	844-10030	2	BOLT, Hex Flg, M10 x 30, 8.8, Full Thd, M10 x 30 mm
13	844-8070	2	BOLT, Hex Flg, M8 x 70, 8.8, M8 x 70 mm
14	87411443	1	FITTING, Air Brake, Push-in, 1/4 npt x 1/4 Tube
15	86985951	1	HOSE, Air Brake Supply
16	87422504	1	HOSE, Hand Valve to Protection Valve
17	87413002	1	BRACKET, SUPPORTING,

MX285 CASE IH MAGNUM TRACTOR (NORTH AMERICA)

07-16 TRAILER BRAKES - PNEUMATIC, HAND CONTROL VALVE

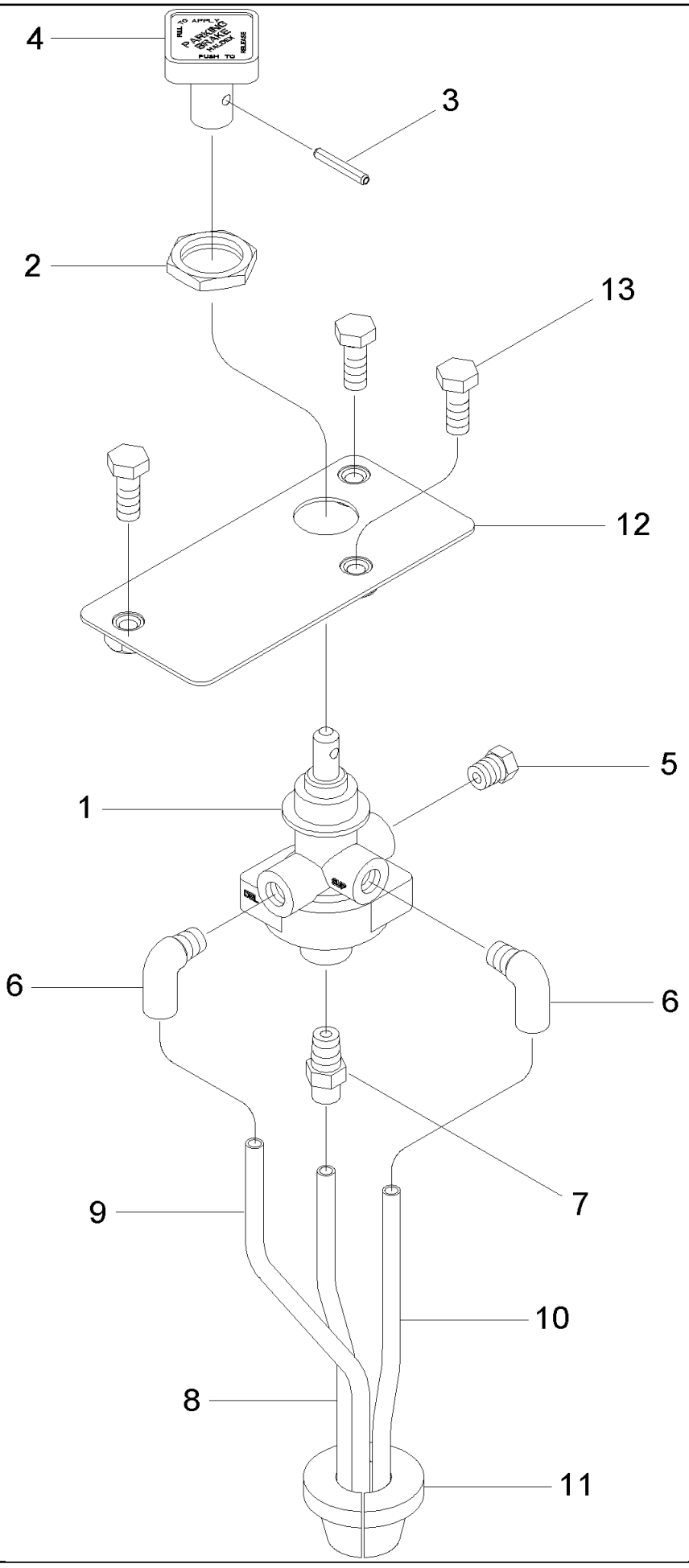

MX285 CASE IH MAGNUM TRACTOR (NORTH AMERICA)

07-16 TRAILER BRAKES - PNEUMATIC, HAND CONTROL VALVE

ссылка	Номер детали	Кол-во	Описание
1	87409382	1	VALVE, PNEUMATIC, Hand, Inc. 2, 3, 4
2	NSS	1	NOT SERVICED SEPARATELY, Nut, Locking
3	NSS	1	NOT SERVICED SEPARATELY, Pin, Roll
4	NSS	1	NOT SERVICED SEPARATELY, Handle
5	86643151	1	PLUG, Hex Hd, 1/8"-27 NPTF, 1/8 nptf
6	87411410	2	ELBOW,
7	87411411	1	CONNECTOR, HYD., Push-in
8	87411887	1	HOSE, Hand Valve Exhaust
9	87422504	1	HOSE, Hand Valve to Protection Valve
10	87422503	1	HOSE, Hand Valve Supply
11	182045A1	1	GROMMET,
12	87411915	1	PLATE, MOUNTING, Hand Valve
13	614-8020	3	BOLT, Hex, M8 x 20, 8.8, M6 x 20

MX285 CASE IH MAGNUM TRACTOR (NORTH AMERICA)

08-01 HYDRAULIC SYSTEM - OIL COOLER

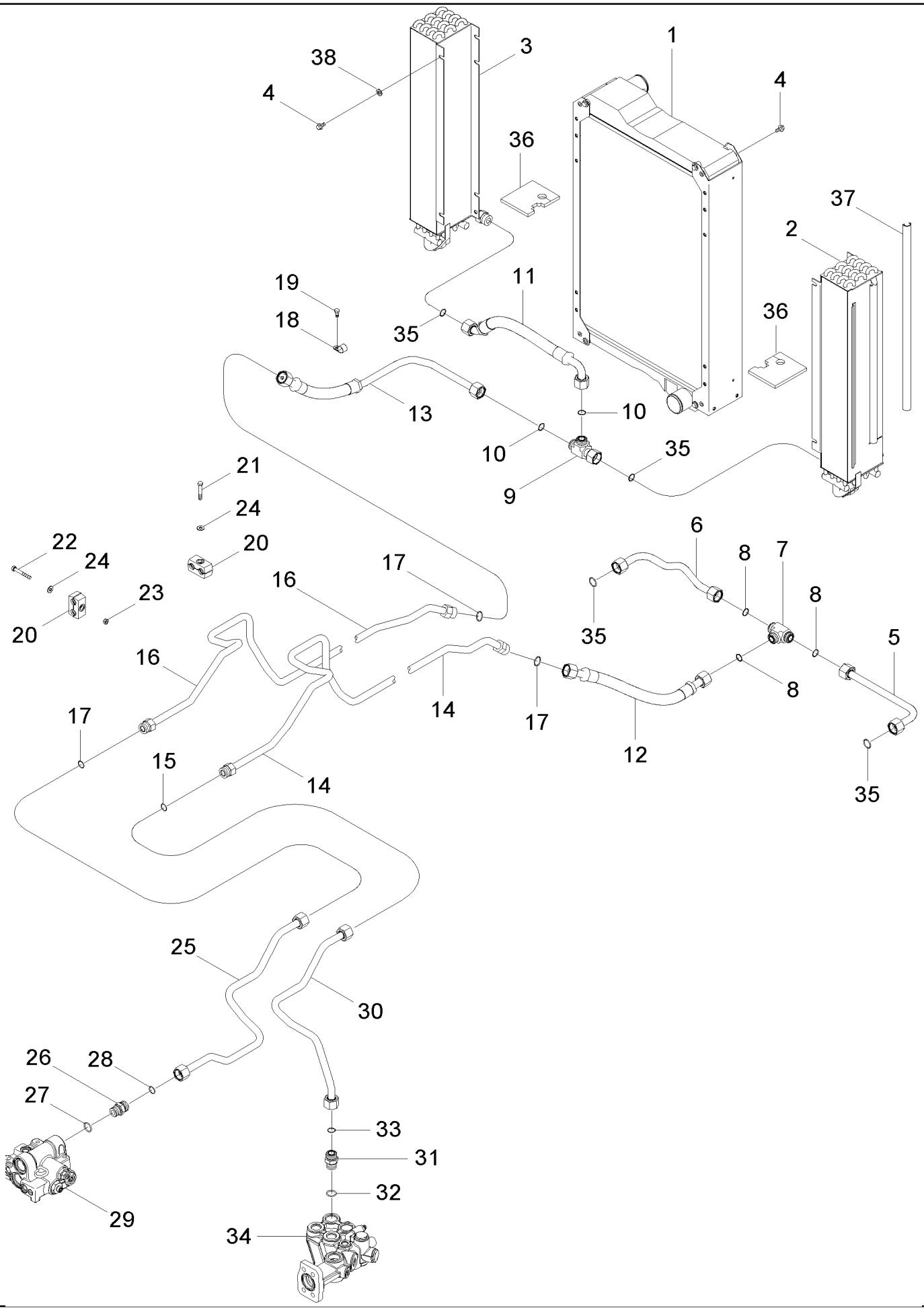

MX285 CASE IH MAGNUM TRACTOR (NORTH AMERICA)

08-01 HYDRAULIC SYSTEM - OIL COOLER

ссылка	Номер детали	Кол-во	Описание
1	REF	1	INSTRUCTION, Radiator, See Figure 02-02
2	435633A2	1	COOLER ASSY., Right Hand
3	435629A2	1	COOLER ASSY., Left Hand
4	555-1	6	SCREW, Hex Flg, M8 x 16, 8.8, M8 x 16; 8.8
5	300904A2	1	PIPE, Right Hand
6	300903A2	1	PIPE, Left Hand
7	701-427	1	TEE, 1 3/16"-12 ORFS, 1-3/16 fc sl , Inc. 8
8	238-6018	3	O-RING, -018, 90 Duro, .739" ID x .070" Thk,
9	701-417	1	TEE, 1 3/16"-12 ORFS x 1 3/16"-12 Fem Sw Run, 1-3/16 fc sl x 1-3/16 sw, Inc. 10
10	238-6018	2	O-RING, -018, 90 Duro, .739" ID x .070" Thk,
11	313315A2	1	HOSE,
12	301020A2	1	HOSE, Supply
13	301430A2	1	HOSE, Return
14	433388A1	1	PIPE, Supply
15	238-6018	2	O-RING, -018, 90 Duro, .739" ID x .070" Thk,
16	433387A1	1	PIPE, Return
17	238-6018	2	O-RING, -018, 90 Duro, .739" ID x .070" Thk,
18	515-22190	1	CLAMP, 3/4", Insul, 5/16" Bolt, 3/4 ID
19	614-8016	1	BOLT, Hex, M8 x 16, 8.8,
20	314137A1	2	COLLAR CLAMP,
21	814-8050	1	BOLT, Hex, M8 x 50, 8.8, M8 x 50; 8,8
22	814-8060	1	BOLT, Hex, M8 x 60, 8.8, M8 x 60; 8.8
23	829-1408	1	NUT, M8, Cl 10, M8; 10
24	895-15008	2	WASHER, M8 x 20 x 1.6, 9 x 20 x 1,6 mm
25	433586A1	1	TUBE ASSY., Supply
26	700-104	1	CONNECTOR, HYD., 1 3/16"-12 ORFS x M27 x 2 ORB, 1-3/16 fc sl x 27 Or, Inc. 27, 28
27	637-64236	1	O-RING, Cl 6, 23.6MM ID x 2.9 Thk, 23,6 ID x 2,9
28	238-6018	1	O-RING, -018, 90 Duro, .739" ID x .070" Thk,
29	404438A5	1	VALVE, Priority, See Figure 08-15, BSN AJB0304793
29	87427822	1	VALVE, Priority, See Figure 08-15, ASN AJB0304793
30	451061A1	1	TUBE ASSY., Return
31	700-104	1	CONNECTOR, HYD., 1 3/16"-12 ORFS x M27 x 2 ORB, 1-3/16 fc sl x 27 Or, Inc. 32, 33
32	637-64236	1	O-RING, Cl 6, 23.6MM ID x 2.9 Thk, 23,6 ID x 2,9
33	238-6018	2	O-RING, -018, 90 Duro, .739" ID x .070" Thk,
34	401600A1	1	HEAD ASSY., Filter, See Figures 08-04, 08-05
35	238-6018	4	O-RING, -018, 90 Duro, .739" ID x .070" Thk,
36	329701A1	2	SEAL,
37	328134A1	2	GUIDE,
38	895-15008	6	WASHER, M8 x 20 x 1.6, 9 x 20 x 1,6 mm

08-02 HYDRAULIC SYSTEM - 3RD OIL COOLER

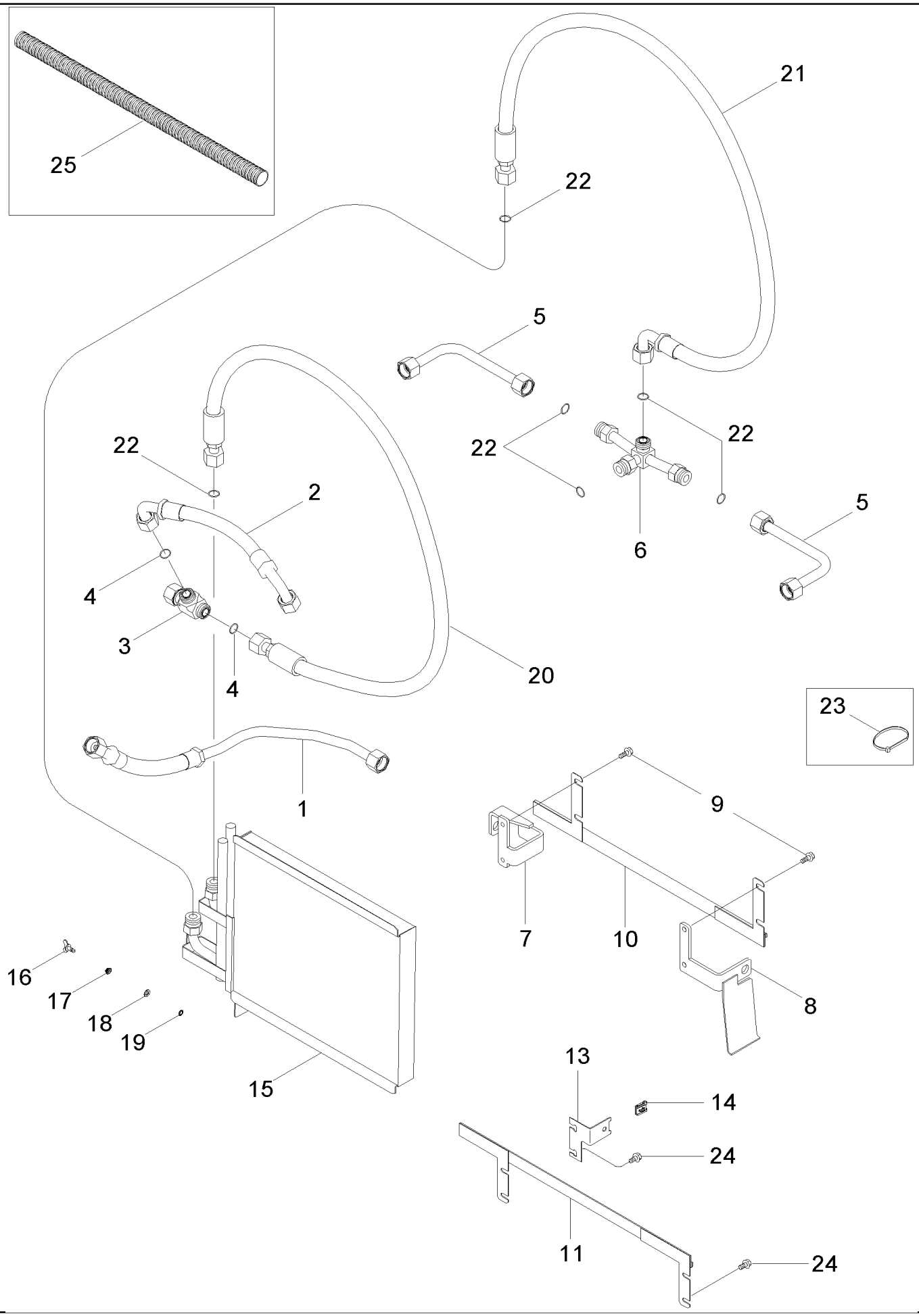

MX285 CASE IH MAGNUM TRACTOR (NORTH AMERICA)

08-02 HYDRAULIC SYSTEM - 3RD OIL COOLER

ссылка	Номер детали	Кол-во	Описание
1	87410071	1	HOSE ASSY.,
2	416025A2	1	HOSE ASSY.,
3	701-417	1	TEE, 1 3/16"-12 ORFS x 1 3/16"-12 Fem Sw Run, 1-3/16 fc sl x 1-3/16 sw, Inc. 4
4	238-6018	2	O-RING, -018, 90 Duro, .739" ID x .070" Thk,
5	430167A2	2	TUBE ASSY.,
6	414916A4	1	TUBE ASSY.,
7	414601A2	1	BRACKET,
8	416300A1	1	BRACKET,
9	844-8020	4	BOLT, Hex Flg, M8 x 20, 8.8,
10	416400A2	1	BRACKET, Upper
11	416401A2	1	BRACKET, Lower
	430396A1	1	BRACKET, Inc.13, 14
13	416403A2	1	BRACKET,
14	419210A1	1	CLIP, SPRING,
15	409218A1	1	COOLER, OIL,
16	419207A1	1	STUD,
17	196548C1	1	SPRING,
18	419212A1	1	WASHER,
19	419211A1	1	RETAINER,
20	416249A2	1	HOSE ASSY., Supply
21	416250A2	1	HOSE ASSY., Return
22	238-6018	6	O-RING, -018, 90 Duro, .739" ID x .070" Thk,
23	A169433	3	STRAP, SECURING,
24	555-1	2	SCREW, Hex Flg, M8 x 16, 8.8, M8 x 16; 8.8
25	398610A1	2	CONDUIT,

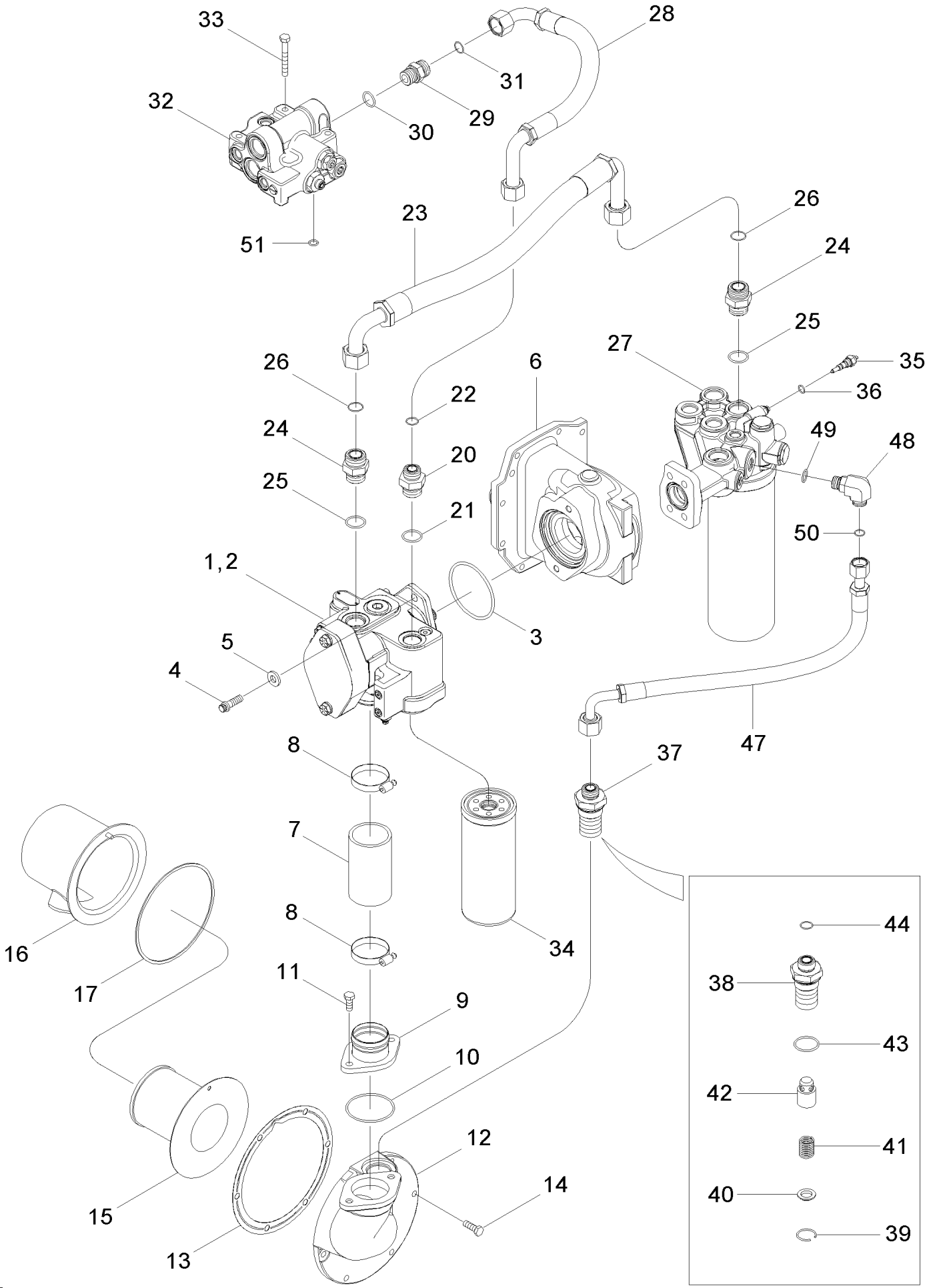
33
28
31
32
29
30
51
23
26
24
25
27
35
36
26
6
22
49
48
24
20
25
21
50
1,2
3
5
4
8
37
47
7
8
34
16
17
11
9
10
12
14
15
13
44
38
43
42
41
40
39

MX285 CASE IH MAGNUM TRACTOR (NORTH AMERICA)

08-03 HYDRAULIC SYSTEM - CHARGE PUMP

ссылка	Номер детали	Кол-во	Описание
1	401363A3	1	PUMP, Charge, Inc. 2
2	87407008	1	KIT, SERVICE,
3	238-5345	1	O-RING, -345, 70 Duro, 3.975" ID x .210" Thk,
4	615-12035	2	BOLT, Hex, M12 x 35, 8.8, Full Thd, M12 x 35; 8,8
5	896-16012	2	WASHER, M12 x 28.5 x 4, HT, 13,5 x 28 x 4 mm
6	389550A1	1	HOUSING, , See Figure 06-39
7	407386A1	1	HOSE,
8	214-1448	2	CLAMP, HOSE, #48, 2.56/3.50 Type F Worm, 2-9/16 - 3-1/2
9	407364A1	1	ADAPTER,
10	238-5235	1	O-RING, -235, 70 Duro, 3.109" ID x .139" Thk,
11	627-10025	2	BOLT, Hex, M10 x 25, 10.9, Full Thd, M10 x 25; 10.9
12	403416A1	1	BASE,
13	139241C5	1	GASKET,
14	628-10030	6	BOLT, Hex, M10 x 30, 10.9, Full Thd, M10 x 30; 10.9
15	1348335C1	1	SCREEN,
16	1348337C1	1	SHROUD, Inc. 17
17	1342641C1	1	GASKET,
20	700-164	1	CONNECTOR, HYD., 1 3/16"-12 ORFS x M33 x 2 ORB, 1-3/16 fc sl x 33 Or, Inc. 21, 22
21	637-64296	1	O-RING, Cl 6, 29.6MM ID x 2.9 Thk, 29,6 ID x 2,9
22	238-6018	1	O-RING, -018, 90 Duro, .739" ID x .070" Thk,
23	451064A1	1	HOSE,
24	700-105	2	CONNECTOR, HYD., 1 7/16"-12 ORFS x M22 x 2 ORB, 1-7/16 fc sl x 33 Or, Inc. 25, 26
25	637-64296	1	O-RING, Cl 6, 29.6MM ID x 2.9 Thk, 29,6 ID x 2,9
26	238-6021	1	O-RING, -021, 90 Duro, .926" ID x .070" Thk,
27	401600A1	1	HEAD ASSY., Filter
28	433585A1	1	HOSE ASSY.,
29	700-104	1	CONNECTOR, HYD., 1 3/16"-12 ORFS x M27 x 2 ORB, 1-3/16 fc sl x 27 Or, Inc. 30, 31
30	637-64236	1	O-RING, Cl 6, 23.6MM ID x 2.9 Thk, 23,6 ID x 2,9
31	238-6018	1	O-RING, -018, 90 Duro, .739" ID x .070" Thk,
32	404438A5	1	VALVE, Priority, See Figure 08-15, BSN AJB0304793
32	87427822	1	VALVE, Priority, See Figure 08-15, ASN AJB0304793
33	814-10075	3	BOLT, Hex, M10 x 75, 8.8, M10 x 75; 8
34	402652A1	1	FILTER,
35	1957801C1	1	SWITCH,
37	407616A2	1	VALVE, Lube Relief, Inc. 38 - 44
38	407615A2	1	BODY, VALVE,
39	107452A1	1	CIRCLIP,
40	107456A1	1	WASHER,
41	431858A1	1	SPRING,
42	NSS	1	NOT SERVICED SEPARATELY, Plunger
43	637-64386	1	O-RING, Cl 6, 38.6MM ID x 2.9 Thk, 1-1/2 ID x 7/64
44	238-6018	1	O-RING, -018, 90 Duro, .739" ID x .070" Thk,
47	442847A1	1	HOSE,
48	700-306	1	ELBOW, 90є, 1"-14 ORFS x M22 x 1.5 ORB, 1 fc sl x 22 Or, Inc 49, 50
49	637-63193	1	O-RING, Cl 6, 19.3MM ID x 2.2 Thk, 19,3 ID x 2,2

ссылка	Номер детали	Кол-во	Описание
50	238-6016	1	O-RING, -016, 90 Duro, .614" ID x .070" Thk,
51	238-6112	1	O-RING, -112, 90 Duro, .487" ID x .103" Thk,
36	237-6006	1	O-RING, 6-1, 90 Duro, .468" ID x .078" Thk,

MX285 CASE IH MAGNUM TRACTOR (NORTH AMERICA)

08-04 HYDRAULIC SYSTEM - PISTON PUMP AND FILTER, STANDARD FLOW CAPACITY

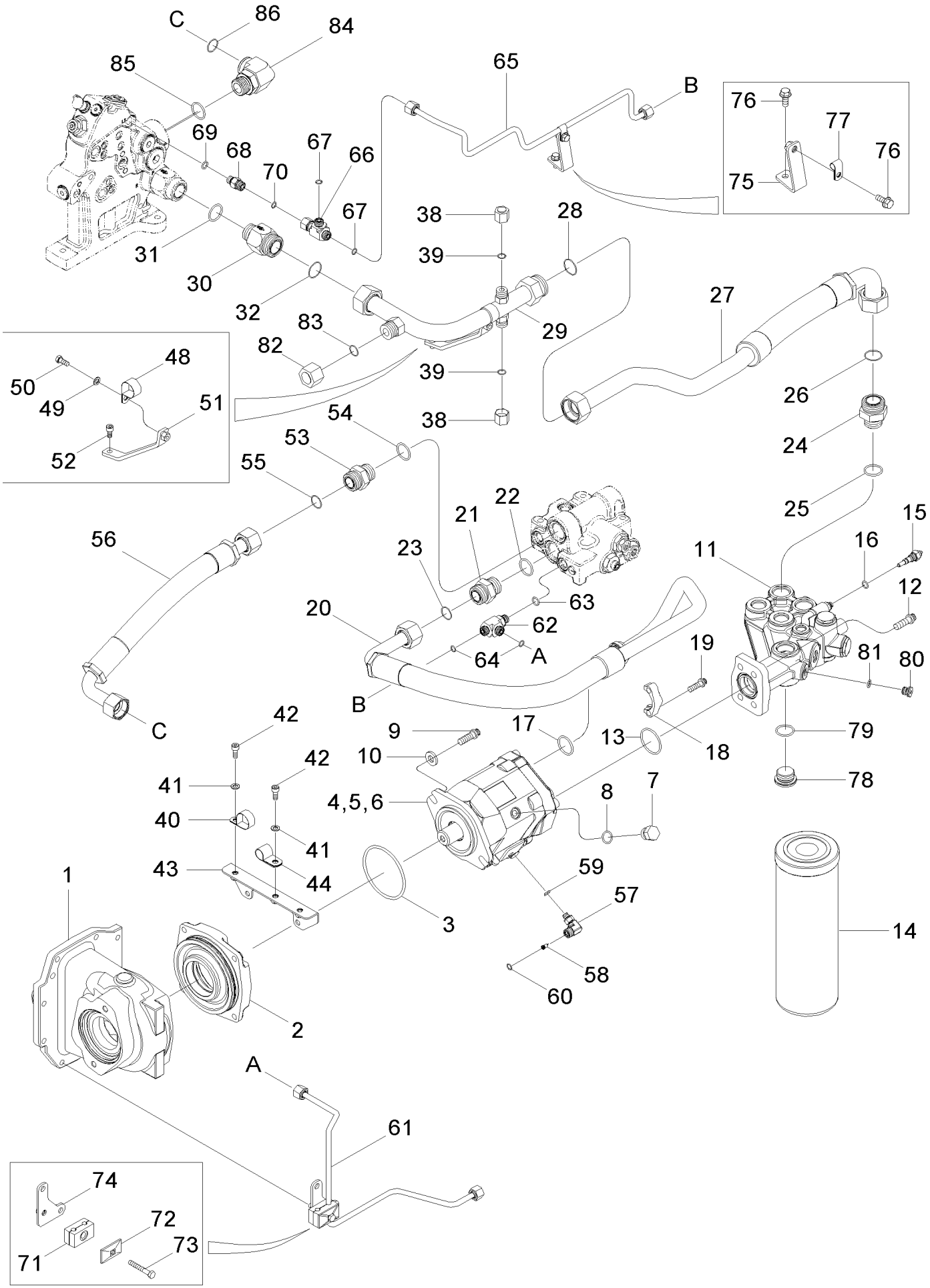

MX285 CASE IH MAGNUM TRACTOR (NORTH AMERICA)

08-04 HYDRAULIC SYSTEM - PISTON PUMP AND FILTER, STANDARD FLOW CAPACITY

ссылка	Номер детали	Кол-во	Описание
1	389550A1	1	HOUSING, , See Figure 06-39
2	405664A2	1	CAGE, , See Figure 06-39
3	238-5345	1	O-RING, -345, 70 Duro, 3.975" ID x .210" Thk,
4	402006A1	1	PUMP, HYDRAULIC, Standard Flow Capacity, Inc. 5, 6, BSN AJB0304793
4	87429249	1	PUMP, HYDRAULIC, Standard Flow Capacity, Inc. 5, 6, ASN AJB0304793
5	451781A1	1	KIT, SERVICE, Compensator, BSN AJB0304793
5	87429483	1	KIT, SERVICE, Compensator, ASN AJB0304793
6	238-8011	3	O-RING, -011,Cl8, .301" ID x .070" Thk,
7	86512512	1	PLUG, Hex Hd, 7/8"-14 ORB, 7/8 Or, Inc. 8
8	237-6010	1	O-RING, 10-1, 90 Duro, .755" ID x .097" Thk,
9	868-12035	2	SCREW, 12 Pt Hd, M12 x 35, 12.9, M12 x 35; 8,8
10	896-16012	2	WASHER, M12 x 28.5 x 4, HT, 13,5 x 28 x 4 mm
11	401600A1	1	HEAD ASSY., Filter
12	868-12035	4	SCREW, 12 Pt Hd, M12 x 35, 12.9, M12 x 35; 12.9
13	238-5225	1	O-RING, -225, 70 Duro, 1.859" ID x .139" Thk,
14	277311A1	1	FILTER, HYDRAULIC OIL,
15	1957801C1	1	SWITCH, Pressure
17	238-6219	1	O-RING, -219, 90 Duro, 1.296" ID x .139" Thk,
18	86980728	2	CLAMP, COLLAR,
19	868-10030	2	SCREW, 12 Pt Hd, M10 x 30, 12.9, M10 x 30; 12.9
20	451055A2	1	HOSE, , BSN AJB0304052
20	87438800	1	HOSE, , ASN AJB0304052
21	700-105	1	CONNECTOR, HYD., 1 7/16"-12 ORFS x M22 x 2 ORB, 1-7/16 fc sl x 33 Or, Inc. 22, 23
22	637-64296	1	O-RING, Cl 6, 29.6MM ID x 2.9 Thk, 29,6 ID x 2,9
23	238-6021	1	O-RING, -021, 90 Duro, .926" ID x .070" Thk,
24	700-134	1	CONNECTOR, HYD., 1 11/16"-12 ORFS x M33 x 2 ORB, 1-11/16 fc sl x 33 Or, Inc. 25, 26
25	637-64296	1	O-RING, Cl 6, 29.6MM ID x 2.9 Thk, 29,6 ID x 2,9
26	238-6025	1	O-RING, -025, 90 Duro, 1.176" ID x .070" Thk,
27	450508A1	1	HOSE,
28	238-6025	1	O-RING, -025, 90 Duro, 1.176" ID x .070" Thk,
29	450507A1	1	TUBE ASSY.,
30	254851A1	1	VALVE, CHECK, 1-11/16 fc sl x 33 Or, Inc. 31, 32
31	637-64296	1	O-RING, Cl 6, 29.6MM ID x 2.9 Thk, 29,6 ID x 2,9
32	238-6025	1	O-RING, -025, 90 Duro, 1.176" ID x .070" Thk,
38	701-905	2	CAP, 13/16"-16 ORFS, 13/16 NF
39	238-6014	2	O-RING, -014, 90 Duro, .489" ID x .070" Thk,
40	515-22317	1	CLAMP, 1 1/4", Insul, 5/16" Bolt, 1-1/4 ID
41	895-11008	2	WASHER, M8 x 16 x 1.6, 9 x 16 x 1,6 mm
42	864-8020	2	SCREW, Hex Soc Hd, M8 x 20, 8.8, M8 x 20; 8.8
43	451054A1	1	BRACKET,
44	515-22349	1	CLAMP, 1 3/8", Insul, 5/16" Bolt, 1-3/8 ID
48	515-23317	1	CLAMP, 1 1/4", Insul, 3/8" Bolt, 1-1/4 ID
49	895-11008	1	WASHER, M8 x 16 x 1.6, 9 x 16 x 1,6 mm
50	614-8020	1	BOLT, Hex, M8 x 20, 8.8, M8 x 20; 8.8
51	450515A1	1	BRACKET,

MX285 CASE IH MAGNUM TRACTOR (NORTH AMERICA)

08-04 HYDRAULIC SYSTEM - PISTON PUMP AND FILTER, STANDARD FLOW CAPACITY

ссылка	Номер детали	Кол-во	Описание
52	864-8016	1	SCREW, Hex Soc Hd, M8 x 16, 8.8, M8 x 16; 8.8
53	700-105	1	CONNECTOR, HYD., 1 7/16"-12 ORFS x M22 x 2 ORB, 1-7/16 fc sl x 33 Or, Inc. 54, 55
54	637-64296	1	O-RING, Cl 6, 29.6MM ID x 2.9 Thk, 29,6 ID x 2,9
55	238-6021	1	O-RING, -021, 90 Duro, .926" ID x .070" Thk,
56	440561A1	1	TUBE ASSY., , Order 87413846. Also Order 413993A1 REF 85 for Initial Replacement, BSN AJB0300037
56	87413846	1	TUBE ASSY., , ASN AJB0300037
57	451226A1	1	ELBOW, Inc. 58, 59, 60
58	133519C1	1	SCREEN,
59	637-63093	1	O-RING, Cl 6, 9.3MM ID x 2.2 Thk, 9,3 ID x 2,2
60	238-6012	1	O-RING, -012, 90 Duro, .364" ID x .070" Thk,
61	451209A1	1	TUBE ASSY.,
62	700-441	1	TEE, 11/16"-16 ORFS x M16 x 1.5 ORB Run, 13/16 fc sl x 16 Or, Inc. 63, 64
63	637-63113	1	O-RING, Cl 6, 11.3MM ID x 2.2 Thk, 11,3 ID x 2,2
64	238-6014	2	O-RING, -014, 90 Duro, .489" ID x .070" Thk,
65	433592A1	1	TUBE ASSY.,
66	701-422	1	TEE, 11/16"-16 ORFS x 11/16"-16 Fem Sw Run, 11/16 fc sl x 11/16 sw, Inc. 67
67	238-6012	2	O-RING, -012, 90 Duro, .364" ID x .070" Thk,
68	223971A1	1	VALVE, CHECK, Inc. 69, 70
69	637-63113	1	O-RING, Cl 6, 11.3MM ID x 2.2 Thk, 11,3 ID x 2,2
70	238-6012	1	O-RING, -012, 90 Duro, .364" ID x .070" Thk,
71	1546024C1	1	CLAMP,
72	384870A1	1	PLATE,
73	814-8055	1	BOLT, Hex, M8 x 55, 8.8, M8 x 55; 8.8
74	451211A1	1	PLATE,
75	86988626	1	BRACKET,
76	844-8020	2	BOLT, Hex Flg, M8 x 20, 8.8,
77	515-2295	1	CLAMP, 3/8", Insul, 5/16" Bolt, 3/8 ID
78	221527A1	1	PLUG, Hex Soc, M33 x 2, ORB, M33 Or, Inc. 79
79	637-64296	1	O-RING, Cl 6, 29.6MM ID x 2.9 Thk, 29,6 ID x 2,9
80	221576A1	1	PLUG, Hex Soc, M14 x 1.5, ORB, M14 Or, Inc. 81
81	637-63113	1	O-RING, Cl 6, 11.3MM ID x 2.2 Thk, 11,3 ID x 2,2
82	701-907	1	CAP, 1 3/16"-12 ORFS, Inc. 83
83	238-6018	1	O-RING, -018, 90 Duro, .739" ID x .070" Thk,
84	700-105	1	CONNECTOR, HYD., 1 7/16"-12 ORFS x M22 x 2 ORB, 1-7/16 fc sl x 33 Or, Inc. 85, 86, BSN AJB0304052
84	413993A1	1	ELBOW, Inc. 85, 86, ASN AJB0304052
85	637-64296	1	O-RING, Cl 6, 29.6MM ID x 2.9 Thk, 29,6 ID x 2,9
86	238-6021	1	O-RING, -021, 90 Duro, .926" ID x .070" Thk,
16	237-6006	1	O-RING, 6-1, 90 Duro, .468" ID x .078" Thk,

MX285 CASE IH MAGNUM TRACTOR (NORTH AMERICA)

08-05 HYDRAULIC SYSTEM - PISTON PUMP AND FILTER, HIGH FLOW CAPACITY

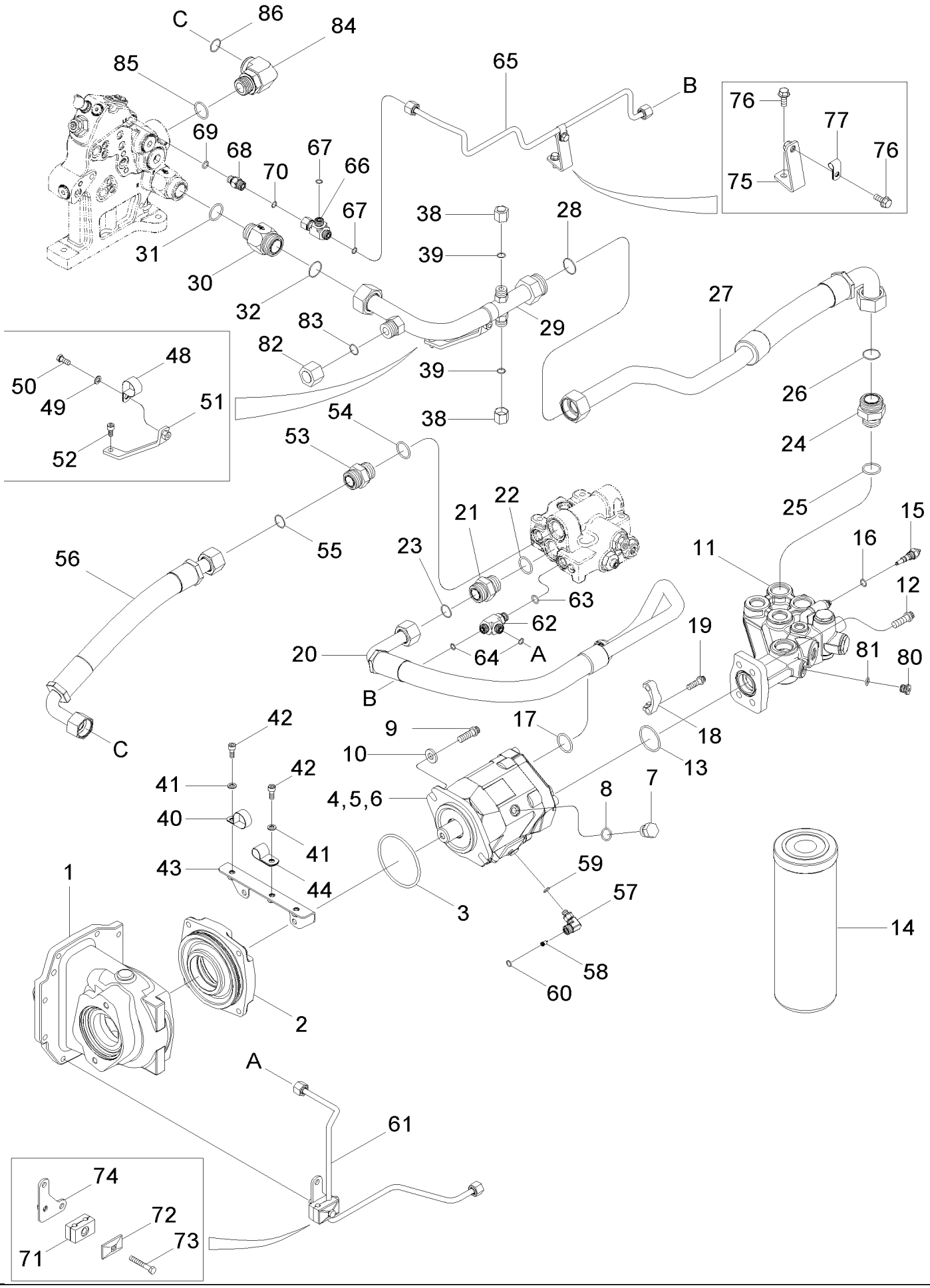

MX285 CASE IH MAGNUM TRACTOR (NORTH AMERICA)

08-05 HYDRAULIC SYSTEM - PISTON PUMP AND FILTER, HIGH FLOW CAPACITY

ссылка	Номер детали	Кол-во	Описание
1	389550A1	1	HOUSING, , See Figure 06-39
2	405664A2	1	CAGE, , See Figure 06-39
3	238-5345	1	O-RING, -345, 70 Duro, 3.975" ID x .210" Thk,
4	402007A2	1	PUMP, HYDRAULIC, High Flow Capacity, Inc. 5, 6, BSN AJB0304793
4	87429252	1	PUMP, HYDRAULIC, High Flow Capacity, Inc. 5, 6, ASN AJB0304793
5	451781A1	1	KIT, SERVICE, Compensator, BSN AJB0304793
5	87429483	1	KIT, SERVICE, Compensator, ASN AJB0304793
6	238-8011	3	O-RING, -011,Cl8, .301" ID x .070" Thk,
7	86512512	1	PLUG, Hex Hd, 7/8"-14 ORB, 7/8 Or, Inc. 8
8	237-6010	1	O-RING, 10-1, 90 Duro, .755" ID x .097" Thk,
9	868-12035	2	SCREW, 12 Pt Hd, M12 x 35, 12.9, M12 x 35; 8,8
10	896-16012	2	WASHER, M12 x 28.5 x 4, HT, 13,5 x 28 x 4 mm
11	405409A1	1	HEAD ASSY., Filter
12	868-12035	4	SCREW, 12 Pt Hd, M12 x 35, 12.9, M12 x 35; 12.9
13	238-5228	1	O-RING, -228, 70 Duro, 2.234" ID x .139" Thk,
14	277311A1	1	FILTER, HYDRAULIC OIL,
15	1957801C1	1	SWITCH, Pressure
17	238-6219	1	O-RING, -219, 90 Duro, 1.296" ID x .139" Thk,
18	86980728	2	CLAMP, COLLAR,
19	868-10030	2	SCREW, 12 Pt Hd, M10 x 30, 12.9, M10 x 30; 12.9
20	451055A2	1	HOSE, , BSN AJB0304052
20	87438801	1	HOSE, , ASN AJB0304052
21	700-105	1	CONNECTOR, HYD., 1 7/16"-12 ORFS x M22 x 2 ORB, 1-7/16 fc sl x 33 Or, Inc. 22, 23
22	637-64296	1	O-RING, Cl 6, 29.6MM ID x 2.9 Thk, 29,6 ID x 2,9
23	238-6021	1	O-RING, -021, 90 Duro, .926" ID x .070" Thk,
24	700-134	1	CONNECTOR, HYD., 1 11/16"-12 ORFS x M33 x 2 ORB, 1-11/16 fc sl x 33 Or, Inc. 25, 26
25	637-64296	1	O-RING, Cl 6, 29.6MM ID x 2.9 Thk, 29,6 ID x 2,9
26	238-6025	1	O-RING, -025, 90 Duro, 1.176" ID x .070" Thk,
27	450508A1	1	HOSE,
28	238-6025	1	O-RING, -025, 90 Duro, 1.176" ID x .070" Thk,
29	450507A1	1	TUBE ASSY.,
30	254851A1	1	VALVE, CHECK, 1-11/16 fc sl x 33 Or, Inc. 31, 32
31	637-64296	1	O-RING, Cl 6, 29.6MM ID x 2.9 Thk, 29,6 ID x 2,9
32	238-6025	1	O-RING, -025, 90 Duro, 1.176" ID x .070" Thk,
38	701-905	2	CAP, 13/16"-16 ORFS, 13/16 NF
39	238-6014	2	O-RING, -014, 90 Duro, .489" ID x .070" Thk,
40	515-22317	1	CLAMP, 1 1/4", Insul, 5/16" Bolt, 1-1/4 ID
41	895-11008	1	WASHER, M8 x 16 x 1.6, 9 x 16 x 1,6 mm
42	864-8020	2	SCREW, Hex Soc Hd, M8 x 20, 8.8, M8 x 20; 8.8
43	451054A1	2	BRACKET,
44	515-22349	1	CLAMP, 1 3/8", Insul, 5/16" Bolt, 1-3/8 ID
48	515-23317	1	CLAMP, 1 1/4", Insul, 3/8" Bolt, 1-1/4 ID
49	895-11008	1	WASHER, M8 x 16 x 1.6, 9 x 16 x 1,6 mm
50	614-8020	1	BOLT, Hex, M8 x 20, 8.8, M8 x 20; 8.8
51	450515A1	1	BRACKET,

MX285 CASE IH MAGNUM TRACTOR (NORTH AMERICA)

08-05 HYDRAULIC SYSTEM - PISTON PUMP AND FILTER, HIGH FLOW CAPACITY

ссылка	Номер детали	Кол-во	Описание
52	864-8016	1	SCREW, Hex Soc Hd, M8 x 16, 8.8, M8 x 16; 8.8
53	700-105	1	CONNECTOR, HYD., 1 7/16"-12 ORFS x M22 x 2 ORB, 1-7/16 fc sl x 33 Or, Inc. 54, 55
54	637-64296	1	O-RING, Cl 6, 29.6MM ID x 2.9 Thk, 29,6 ID x 2,9
55	238-6021	1	O-RING, -021, 90 Duro, .926" ID x .070" Thk,
56	440561A1	1	TUBE ASSY., , Order 87413846. Also Order 413993A1 REF 85 for Initial Replacement, BSN AJB0300037
56	87413846	1	TUBE ASSY., , ASN AJB0300037
57	451226A1	1	ELBOW, Inc. 58, 59, 60
58	133519C1	1	SCREEN,
59	637-63093	1	O-RING, Cl 6, 9.3MM ID x 2.2 Thk, 9,3 ID x 2,2
60	238-6012	1	O-RING, -012, 90 Duro, .364" ID x .070" Thk,
61	451209A1	1	TUBE ASSY.,
62	700-441	1	TEE, 11/16"-16 ORFS x M16 x 1.5 ORB Run, 13/16 fc sl x 16 Or, Inc. 63, 64
63	637-63113	1	O-RING, Cl 6, 11.3MM ID x 2.2 Thk, 11,3 ID x 2,2
64	238-6014	2	O-RING, -014, 90 Duro, .489" ID x .070" Thk,
65	433592A1	1	TUBE ASSY.,
66	701-422	1	TEE, 11/16"-16 ORFS x 11/16"-16 Fem Sw Run, 11/16 fc sl x 11/16 sw, Inc. 67
67	238-6012	2	O-RING, -012, 90 Duro, .364" ID x .070" Thk,
68	223971A1	1	VALVE, CHECK, Inc. 69, 70
69	637-63113	1	O-RING, Cl 6, 11.3MM ID x 2.2 Thk, 11,3 ID x 2,2
70	238-6012	1	O-RING, -012, 90 Duro, .364" ID x .070" Thk,
71	1546024C1	1	CLAMP,
72	384870A1	1	PLATE,
73	814-8055	1	BOLT, Hex, M8 x 55, 8.8, M8 x 55; 8.8
74	451211A1	1	PLATE,
75	86988626	1	BRACKET,
76	844-8020	2	BOLT, Hex Flg, M8 x 20, 8.8,
77	515-2295	1	CLAMP, 3/8", Insul, 5/16" Bolt, 3/8 ID
80	221576A1	1	PLUG, Hex Soc, M14 x 1.5, ORB, M14 Or, Inc. 81
81	637-63113	1	O-RING, Cl 6, 11.3MM ID x 2.2 Thk, 11,3 ID x 2,2
82	701-907	1	CAP, 1 3/16"-12 ORFS,
83	238-6018	1	O-RING, -018, 90 Duro, .739" ID x .070" Thk,
84	700-105	1	CONNECTOR, HYD., 1 7/16"-12 ORFS x M22 x 2 ORB, 1-7/16 fc sl x 33 Or, Inc. 85, 86, BSN AJB0300037
84	413993A1	1	ELBOW, Inc. 85, 86, ASN AJB0300037
85	637-64296	1	O-RING, Cl 6, 29.6MM ID x 2.9 Thk, 29,6 ID x 2,9
86	238-6021	1	O-RING, -021, 90 Duro, .926" ID x .070" Thk,
16	237-6006	1	O-RING, 6-1, 90 Duro, .468" ID x .078" Thk,

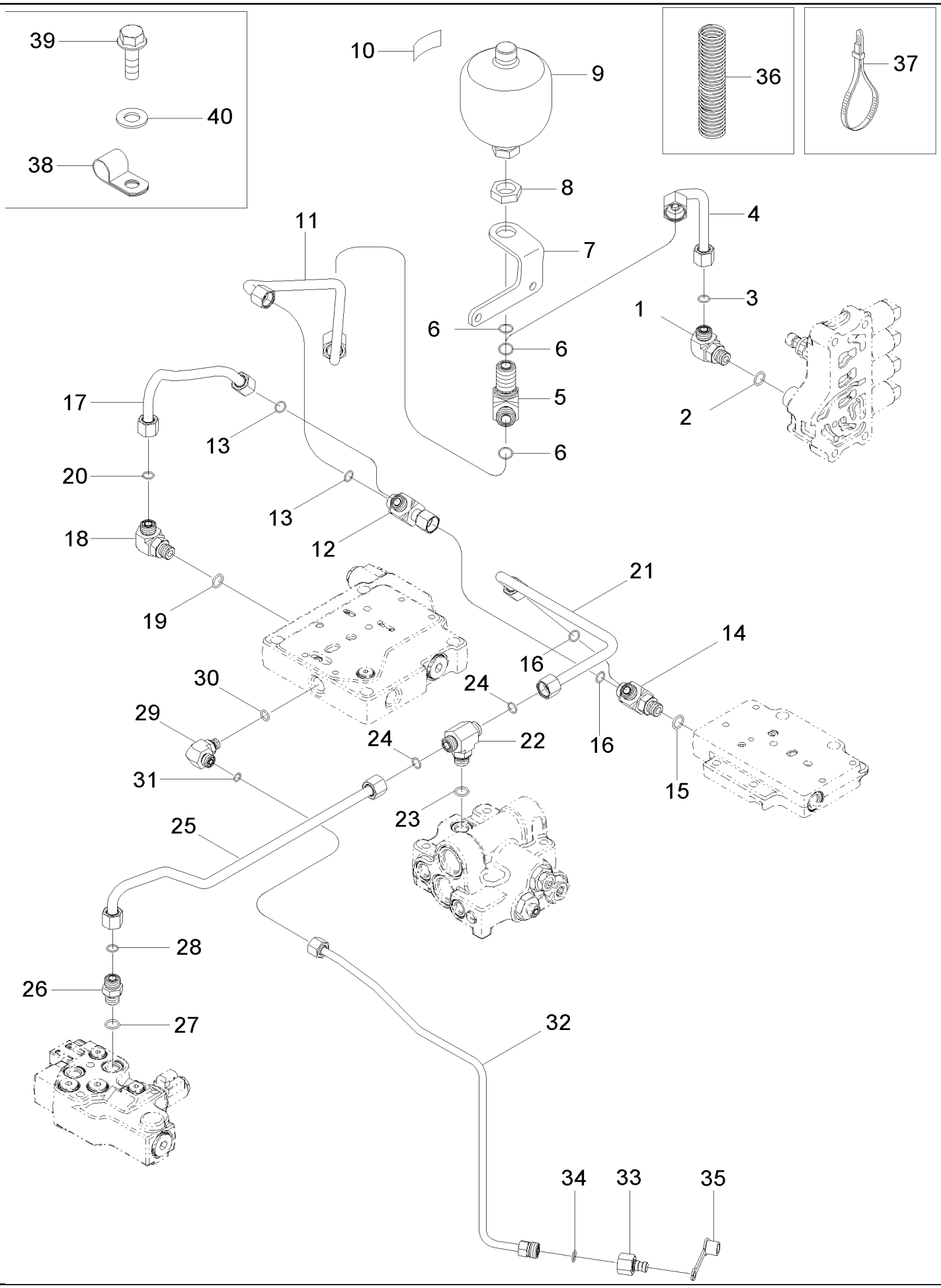
39
40
38
10
9
36
37
8
4
11
7
3
1
6
6
5
2
6
17
13
20
13
18
12
21
19
14
16
30
24
29
24
22
16
31
15
23
25
28
26
27
32
34
33
35

MX285 CASE IH MAGNUM TRACTOR (NORTH AMERICA)

08-06 HYDRAULIC SYSTEM - REGULATED PRESSURE

ссылка	Номер детали	Кол-во	Описание
1	700-305	1	ELBOW, 90є, 13/16"-18 ORFS x M18 x 1.5 ORB, 13/16 fc sl x 18 Or, Inc. 2, 3
2	637-63153	1	O-RING, Cl 6, 15.3MM ID x 2.2 Thk, 15,3 ID x 2,2
3	238-6014	1	O-RING, -014, 90 Duro, .489" ID x .070" Thk,
4	87405121	1	TUBE ASSY.,
5	701-454	1	TEE, 1"-14 ORFS, Blkhd Br, 1 fc sl blkhd, Inc. 6
6	238-6016	3	O-RING, -016, 90 Duro, .614" ID x .070" Thk,
7	86988829	1	BRACKET,
8	701-919	1	NUT, LOCK, 1"-14, ORFS Blkhd, 1 in
9	86984247	1	ACCUMULATOR,
10	82029752	1	PLAQUE, DATA,
11	86988918	1	TUBE ASSY.,
12	701-416	1	TEE, 13/16"-16 ORFS x 13/16"-16 Fem Sw Run, 13/16 fc sl x 13/16 sw, Inc. 13
13	238-6014	2	O-RING, -014, 90 Duro, .489" ID x .070" Thk,
14	700-412	1	TEE, 13/16"-16 ORFS x M18 x 1.5 ORB Run, 13/16 fc sl x 18 Or, Inc. 15, 16
15	637-63153	1	O-RING, Cl 6, 15.3MM ID x 2.2 Thk, 15,3 ID x 2,2
16	238-6014	1	O-RING, -014, 90 Duro, .489" ID x .070" Thk,
17	308172A1	1	PIPE,
18	700-305	1	ELBOW, 90є, 13/16"-18 ORFS x M18 x 1.5 ORB, 13/16 fc sl x 18 Or, Inc. 19, 20
19	637-63153	1	O-RING, Cl 6, 15.3MM ID x 2.2 Thk, 15,3 ID x 2,2
20	238-6014	1	O-RING, -014, 90 Duro, .489" ID x .070" Thk,
21	433589A1	1	TUBE ASSY.,
22	700-402	1	TEE, 13/16"-16 ORFS x M18 x 1.5 ORB Br, 13/16 fc sl x 18 Or, Inc. 23, 24
23	637-63153	1	O-RING, Cl 6, 15.3MM ID x 2.2 Thk, 15,3 ID x 2,2
24	238-6014	2	O-RING, -014, 90 Duro, .489" ID x .070" Thk,
25	450512A1	1	TUBE ASSY.,
26	700-102	1	CONNECTOR, HYD., 13/16"-16 ORFS x M18 x 1.5 ORB, 13/16 fc sl x 18 Or, Inc. 27, 28
27	637-63153	1	O-RING, Cl 6, 15.3MM ID x 2.2 Thk, 15,3 ID x 2,2
28	238-6014	1	O-RING, -014, 90 Duro, .489" ID x .070" Thk,
29	700-303	1	ELBOW, 90є, 9/16"-18 ORFS x M12 x 1.5 ORB, 11/16 fc sl x 14 Or, Inc. 30, 31
30	637-63113	1	O-RING, Cl 6, 11.3MM ID x 2.2 Thk, 11,3 ID x 2,2
31	238-6012	1	O-RING, -012, 90 Duro, .364" ID x .070" Thk,
32	451059A1	1	TUBE ASSY.,
33	322529A1	1	COUPLING, Diagnostic
34	238-6014	1	O-RING, -014, 90 Duro, .489" ID x .070" Thk,
35	143349A1	1	CAP,
36	87413833	1	CONDUIT, (If Equipped)
37	L11541	2	STRAP, (If Equipped)
38	515-23127	1	CLAMP, 1/2", Insul, 3/8" Bolt,
39	614-10020	1	BOLT, Hex, M10 x 20, 8.8, Full Thd,
40	895-18010	1	WASHER, M10 x 18 x 1.6, 10,5 x 18 x 1,6 mm

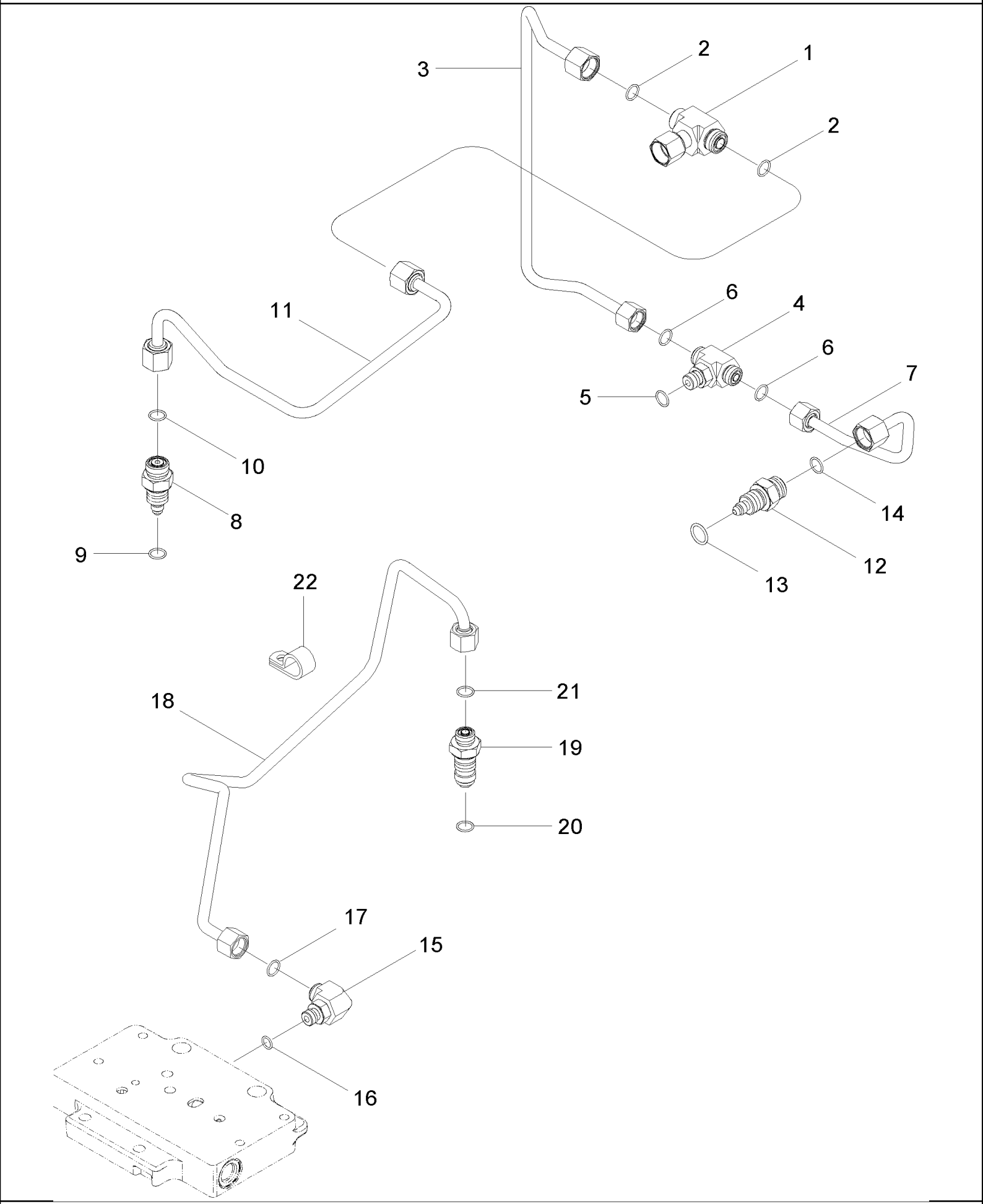
3
2
1
2
11
6
4
6
7
5
10
8
9
14
12
13
22
21
18
19
20
17
15
16

MX285 CASE IH MAGNUM TRACTOR (NORTH AMERICA)

08-07 HYDRAULIC SYSTEM - CREEP SPEED

ссылка	Номер детали	Кол-во	Описание
1	701-411	1	TEE, 13/16"-16 ORFS x 13/16"-16 Fem Sw Br, 13/16 fc sl x 13/16 sw, Inc. 2
2	238-6014	2	O-RING, -014, 90 Duro, .489" ID x .070" Thk,
3	282365A1	1	PIPE,
4	700-401	1	TEE, 11/16"-16 ORFS x M14 x 1.5 ORB Br, 11/16 fc sl x 14 Or, Inc. 5, 6
5	637-63113	1	O-RING, Cl 6, 11.3MM ID x 2.2 Thk, 11,3 ID x 2,2
6	238-6012	2	O-RING, -012, 90 Duro, .364" ID x .070" Thk,
7	282278A1	1	PIPE,
8	93105C1	1	UNION,
9	237-6008	1	O-RING, 8-1, 90 Duro, .644" ID x .087" Thk,
10	238-6014	1	O-RING, -014, 90 Duro, .489" ID x .070" Thk,
11	299160A1	1	PIPE, , BSN AJB0355338
11	87440741	1	PIPE, , ASN AJB0355338
12	93105C1	1	UNION,
13	238-6014	1	O-RING, -014, 90 Duro, .489" ID x .070" Thk,
14	237-6008	1	O-RING, 8-1, 90 Duro, .644" ID x .087" Thk,
15	700-304	1	ELBOW, 90є, 11/16"-18 ORFS x M14 x 1.5 ORB, 11/16 fc sl x 14 Or, Inc. 16, 17
16	637-63113	1	O-RING, Cl 6, 11.3MM ID x 2.2 Thk, 11,3 ID x 2,2
17	238-6012	1	O-RING, -012, 90 Duro, .364" ID x .070" Thk,
18	297622A2	1	PIPE, , BSN AJB0355923
18	87446665	1	PIPE, , ASN AJB0355923
19	93103C1	1	UNION,
20	237-6008	1	O-RING, 8-1, 90 Duro, .644" ID x .087" Thk,
21	238-6012	1	O-RING, -012, 90 Duro, .364" ID x .070" Thk,
22	515-2495	1	CLAMP, 3/8", Insul, 7/16" Bolt, 7/16 ID, BSN AJB0355923

MX285 CASE IH MAGNUM TRACTOR (NORTH AMERICA)

08-08 HYDRAULIC SYSTEM - TRANSMISSION LUBE

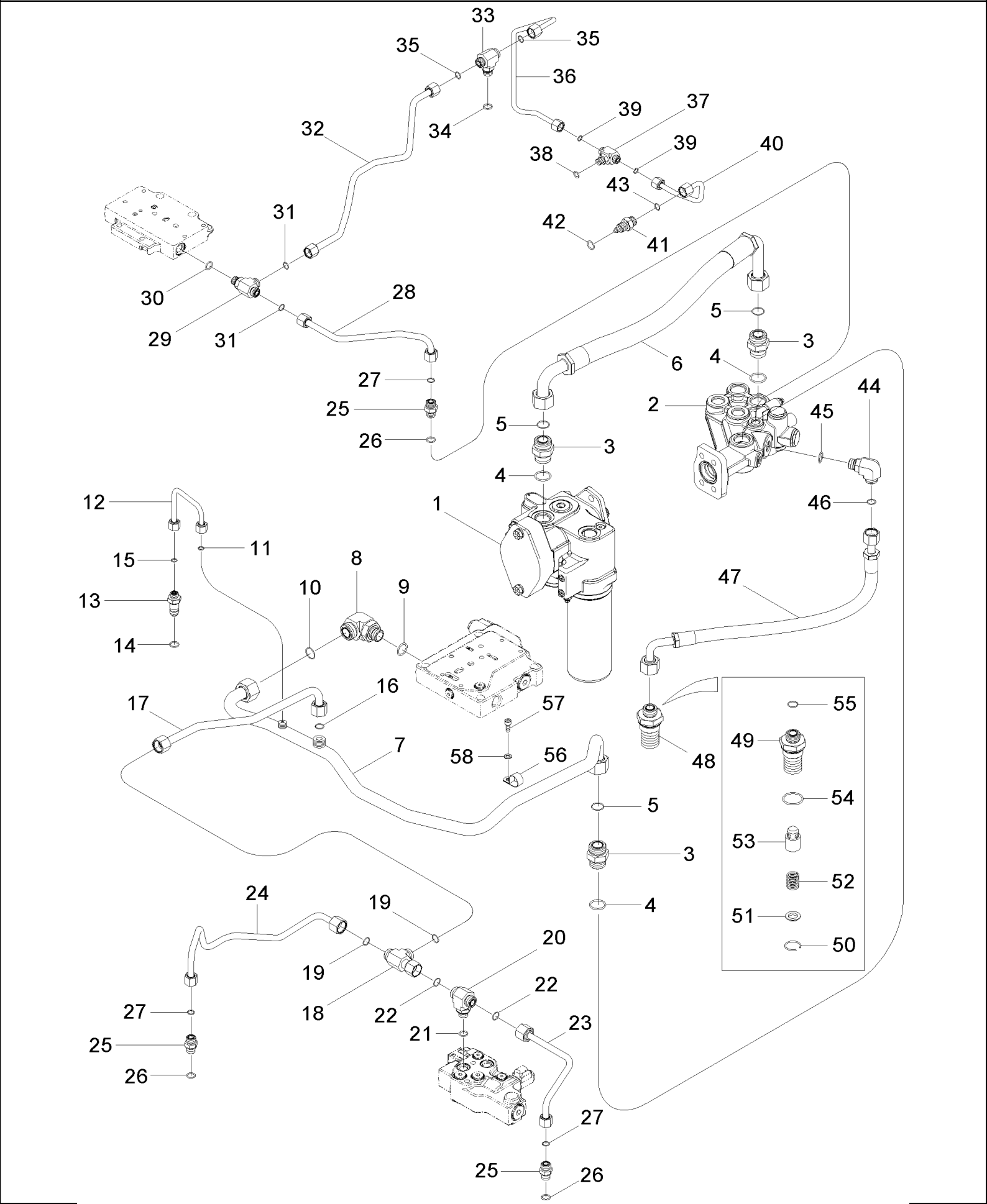

MX285 CASE IH MAGNUM TRACTOR (NORTH AMERICA)

08-08 HYDRAULIC SYSTEM - TRANSMISSION LUBE

ссылка	Номер детали	Кол-во	Описание
1	401363A3	1	PUMP, Charge
2	401600A1	1	HEAD ASSY., Filter
3	700-105	3	CONNECTOR, HYD., 1 7/16"-12 ORFS x M22 x 2 ORB, 1-7/16 fc sl x 33 Or, Inc. 4, 5
4	637-64296	1	O-RING, Cl 6, 29.6MM ID x 2.9 Thk, 29,6 ID x 2,9
5	238-6021	1	O-RING, -021, 90 Duro, .926" ID x .070" Thk,
6	451064A1	1	HOSE,
7	87415008	1	TUBE, HYD, , BSN AJB0302120 Also Order 87415005 and 433595A3 For Initial Replacement
8	87010650	1	ELBOW, 90є, 1 7/16"-12 ORFS x M27 x 2 ORB, 1-7/16 fc sl x 27 Or, Inc. 9, 10
9	637-64236	1	O-RING, Cl 6, 23.6MM ID x 2.9 Thk, 23,6 ID x 2,9
10	238-6021	1	O-RING, -021, 90 Duro, .926" ID x .070" Thk,
11	238-6016	1	O-RING, -016, 90 Duro, .614" ID x .070" Thk,
12	434850A1	1	TUBE ASSY.,
13	308181A1	1	FITTING,
14	237-6008	1	O-RING, 8-1, 90 Duro, .644" ID x .087" Thk,
15	238-6016	1	O-RING, -016, 90 Duro, .614" ID x .070" Thk,
16	238-6016	1	O-RING, -016, 90 Duro, .614" ID x .070" Thk,
17	87415005	1	TUBE ASSY., , BSN AJB0302120 Also Order 87415008 and 433595A3 For Initial Replacement
18	701-433	1	TEE, 1"-14 ORFS x 1"-14 Fem Sw Run, 1 fc sl x 1 sw, Inc. 19
19	238-6016	2	O-RING, -016, 90 Duro, .614" ID x .070" Thk,
20	87016910	1	TEE, 1"-14 ORFS x M18 x 1.5 ORB Br, 1 fc sl x 18 Or, Inc. 21, 22
21	637-63153	1	O-RING, Cl 6, 15.3MM ID x 2.2 Thk, 15,3 ID x 2,2
22	238-6016	1	O-RING, -016, 90 Duro, .614" ID x .070" Thk,
23	450509A1	1	TUBE ASSY.,
24	450510A1	1	TUBE ASSY.,
25	700-102	3	CONNECTOR, HYD., 13/16"-16 ORFS x M18 x 1.5 ORB, 13/16 fc sl x 18 Or, Inc. 26, 27
26	637-63153	1	O-RING, Cl 6, 15.3MM ID x 2.2 Thk, 15,3 ID x 2,2
27	238-6014	1	O-RING, -014, 90 Duro, .489" ID x .070" Thk,
28	451060A1	1	TUBE ASSY.,
29	700-412	1	TEE, 13/16"-16 ORFS x M18 x 1.5 ORB Run, 13/16 fc sl x 18 Or, Inc. 30, 31
30	637-63153	1	O-RING, Cl 6, 15.3MM ID x 2.2 Thk, 15,3 ID x 2,2
31	238-6014	1	O-RING, -014, 90 Duro, .489" ID x .070" Thk,
32	437336A1	1	TUBE ASSY., , BSN AJB0355923
32	437336A2	1	TUBE ASSY., , ASN AJB0355923
33	700-402	1	TEE, 13/16"-16 ORFS x M18 x 1.5 ORB Br, 13/16 fc sl x 18 Or, Inc. 34, 35
34	637-63153	1	O-RING, Cl 6, 15.3MM ID x 2.2 Thk, 15,3 ID x 2,2
35	238-6014	1	O-RING, -014, 90 Duro, .489" ID x .070" Thk,
36	282275A1	1	PIPE,
37	700-401	1	TEE, 11/16"-16 ORFS x M14 x 1.5 ORB Br, 11/16 fc sl x 14 Or, Inc. 38, 39
38	637-63113	1	O-RING, Cl 6, 11.3MM ID x 2.2 Thk, 11,3 ID x 2,2
39	238-6012	1	O-RING, -012, 90 Duro, .364" ID x .070" Thk,
40	282278A1	1	PIPE,
41	93105C1	1	UNION,
42	237-6008	1	O-RING, 8-1, 90 Duro, .644" ID x .087" Thk,
43	238-6014	1	O-RING, -014, 90 Duro, .489" ID x .070" Thk,
44	700-306	1	ELBOW, 90є, 1"-14 ORFS x M22 x 1.5 ORB, 1 fc sl x 22 Or, Inc. 45, 46

ссылка	Номер детали	Кол-во	Описание
45	637-63193	1	O-RING, Cl 6, 19.3MM ID x 2.2 Thk, 19,3 ID x 2,2
46	238-6016	1	O-RING, -016, 90 Duro, .614" ID x .070" Thk,
47	442847A1	1	HOSE,
48	407616A2	1	VALVE, Inc. 48 - 54
49	407615A2	1	BODY, VALVE,
50	107452A1	1	CIRCLIP,
51	107456A1	1	WASHER,
52	431858A1	1	SPRING,
53	NSS	1	NOT SERVICED SEPARATELY, Plunger
54	637-64386	1	O-RING, Cl 6, 38.6MM ID x 2.9 Thk, 1-1/2 ID x 7/64
55	238-6018	1	O-RING, -018, 90 Duro, .739" ID x .070" Thk,
56	515-22254	1	CLAMP, 1", Insul, 5/16" Bolt, 1 ID
57	864-8020	1	SCREW, Hex Soc Hd, M8 x 20, 8.8, M8 x 20; 8.8
58	895-11008	1	WASHER, M8 x 16 x 1.6, 9 x 16 x 1,6 mm

MX285 CASE IH MAGNUM TRACTOR (NORTH AMERICA)

08-09 HYDRAULIC SYSTEM - HITCH

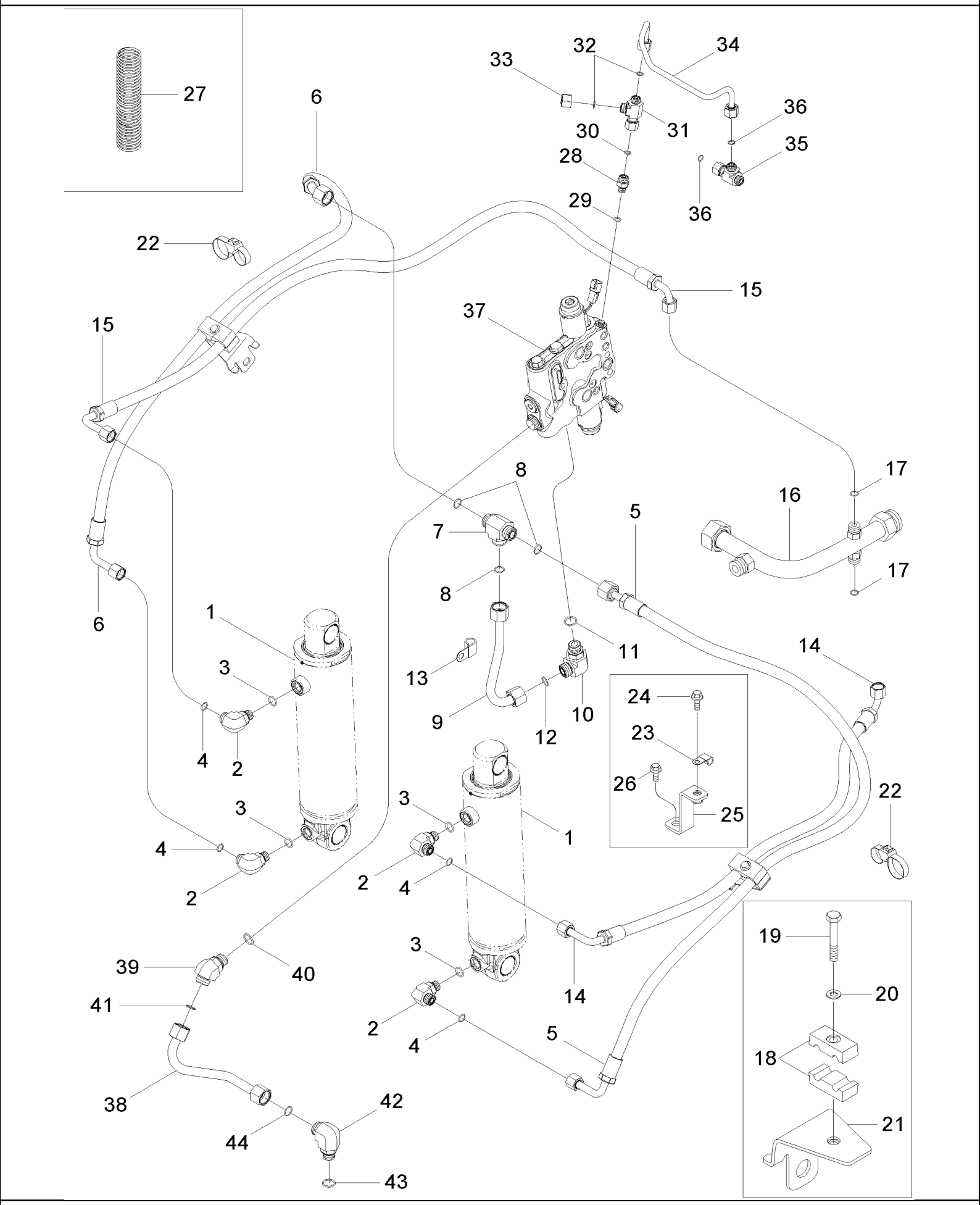

MX285 CASE IH MAGNUM TRACTOR (NORTH AMERICA)

08-09 HYDRAULIC SYSTEM - HITCH

ссылка	Номер детали	Кол-во	Описание
1	REF	2	INSTRUCTION, Cylinder, Hitch, See Figures 08-23, 08-24, 08-25
2	700-305	4	ELBOW, 90є, 13/16"-18 ORFS x M18 x 1.5 ORB, 13/16 fc sl x 18 Or, Inc. 3, 4
3	637-63153	1	O-RING, Cl 6, 15.3MM ID x 2.2 Thk, 15,3 ID x 2,2
4	238-6014	1	O-RING, -014, 90 Duro, .489" ID x .070" Thk,
5	416432A2	1	HOSE, Supply, Right Hand
6	416433A3	1	HOSE, Supply, Left Hand
7	701-415	1	TEE, 1"-14 ORFS, 1 fc sl, Inc. 8
8	238-6016	3	O-RING, -016, 90 Duro, .614" ID x .070" Thk,
9	436812A1	1	TUBE ASSY.,
10	700-306	1	ELBOW, 90є, 1"-14 ORFS x M22 x 1.5 ORB, 1 fc sl x 22 Or, Inc. 11, 12
11	637-63193	1	O-RING, Cl 6, 19.3MM ID x 2.2 Thk, 19,3 ID x 2,2
12	238-6016	1	O-RING, -016, 90 Duro, .614" ID x .070" Thk,
13	515-25159	1	CLAMP, 5/8", Insul, 1/2" Bolt, 5/8 ID
14	450503A1	1	HOSE, Return, Right Hand
15	450506A2	1	HOSE, Return, Left hand
16	450507A1	1	TUBE ASSY.,
17	238-6014	2	O-RING, -014, 90 Duro, .489" ID x .070" Thk,
18	329804A1	2	FIXING BRACKET,
19	814-8050	2	BOLT, Hex, M8 x 50, 8.8, M8 x 50; 8.8
20	895-15008	2	WASHER, M8 x 20 x 1.6, 9 x 20 x 1,6 mm
21	349233A1	2	BRACKET,
22	86991000	22	CLAMP,
23	515-23206	1	CLAMP, 13/16", Insul, 3/8" Bolt, 13/16 ID
24	844-8020	1	BOLT, Hex Flg, M8 x 20, 8.8,
25	86985195	1	BRACKET,
26	844-10016	1	SCREW, Hex Flg, M10 x 16, 8.8, Full Thd, M10 x 16; 8.8
27	398610A1	3	CONDUIT,
28	700-165	1	CONNECTOR, HYD., 11/16"-16 ORFS x M12 x 1.5 ORB, 11/16 fc sl x 12 Or, Inc. 29, 30
29	637-63093	1	O-RING, Cl 6, 9.3MM ID x 2.2 Thk, 9,3 ID x 2,2
30	238-6012	1	O-RING, -012, 90 Duro, .364" ID x .070" Thk,
31	701-422	1	TEE, 11/16"-16 ORFS x 11/16"-16 Fem Sw Run, 11/16 fc sl x 11/16 sw, Inc. 32
32	238-6012	2	O-RING, -012, 90 Duro, .364" ID x .070" Thk,
33	701-900	1	CAP, 11/16"-16 ORFS, 11/16
34	436163A1	1	TUBE ASSY.,
35	701-422	1	TEE, 11/16"-16 ORFS x 11/16"-16 Fem Sw Run, 11/16 fc sl x 11/16 sw, Inc. 36
36	238-6012	2	O-RING, -012, 90 Duro, .364" ID x .070" Thk,
37	412509A2	1	VALVE, , See Figure 08-20, BSN AJB0362561
37	87371677	1	VALVE, , See Figure 08-20A, ASN AJB0362562
38	401336A1	1	TUBE ASSY.,
39	700-316	1	ELBOW, 45є, 1"-14 ORFS x M22 x 1.5 ORB, 1 fc sl x 22 Or, Inc. 40, 41
40	637-63193	1	O-RING, Cl 6, 19.3MM ID x 2.2 Thk, 19,3 ID x 2,2
41	238-6016	1	O-RING, -016, 90 Duro, .614" ID x .070" Thk,
42	700-306	1	ELBOW, 90є, 1"-14 ORFS x M22 x 1.5 ORB, 1 fc sl x 22 Or, Inc. 43, 44
43	637-63193	1	O-RING, Cl 6, 19.3MM ID x 2.2 Thk, 19,3 ID x 2,2
44	238-6016	1	O-RING, -016, 90 Duro, .614" ID x .070" Thk,

08-09A(1) HYDRAULIC TOP LINK - HITCH

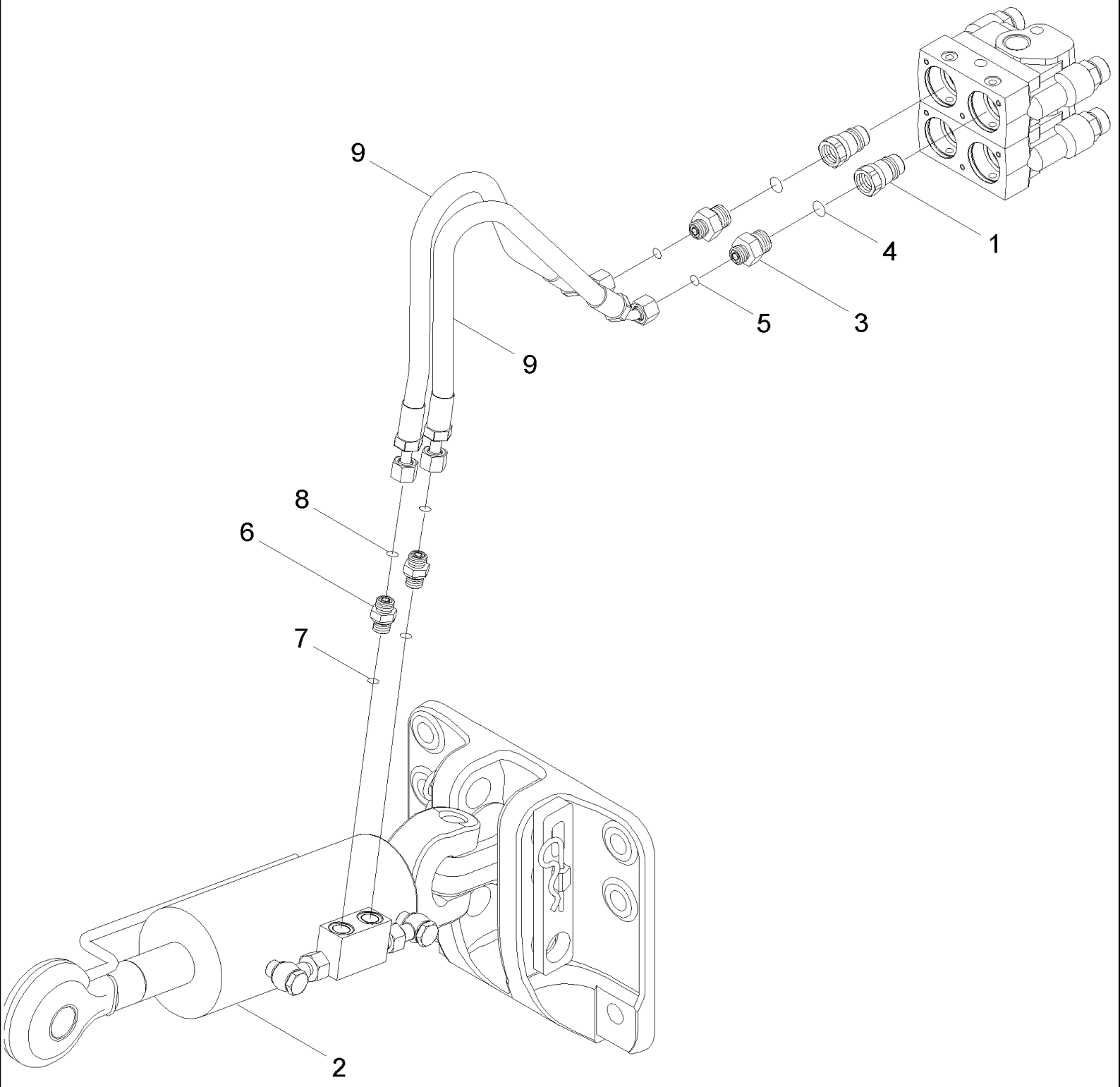

MX285 CASE IH MAGNUM TRACTOR (NORTH AMERICA)

08-09A(1) HYDRAULIC TOP LINK - HITCH

сылка	Номер детали	Кол-во	Описание
1	1272399C2	2	COUPLING, QUICK, MALE,
2	87453964	1	LINK, TOP, Short, Used With Short Draft Arms, 970 mm (38 in) Center To Center, See Figure 09-48A For Service Components
3	201-139	2	CONNECTOR, HYD., 11/16"-16 ORFS x 7/8"-14 ORB, Inc. 4, 5
4	237-6010	1	O-RING, 10-1, 90 Duro, .755" ID x .097" Thk,
5	238-6012	1	O-RING, -012, 90 Duro, .364" ID x .070" Thk,
6	700-157	2	CONNECTOR, HYD., 11/16"-16 ORFS x M16 x 1.5 ORB, Inc. 7, 8
7	637-63133	1	O-RING, Cl 6, 13.3MM ID x 2.2 Thk, 13,3 ID x 2,2
8	238-6012	1	O-RING, -012, 90 Duro, .364" ID x .070" Thk,
9	87441258	2	HOSE, 705 mm (27-3/4 in)

MX285 CASE IH MAGNUM TRACTOR (NORTH AMERICA)

08-09A(2) HYDRAULIC TOP LINK - HITCH

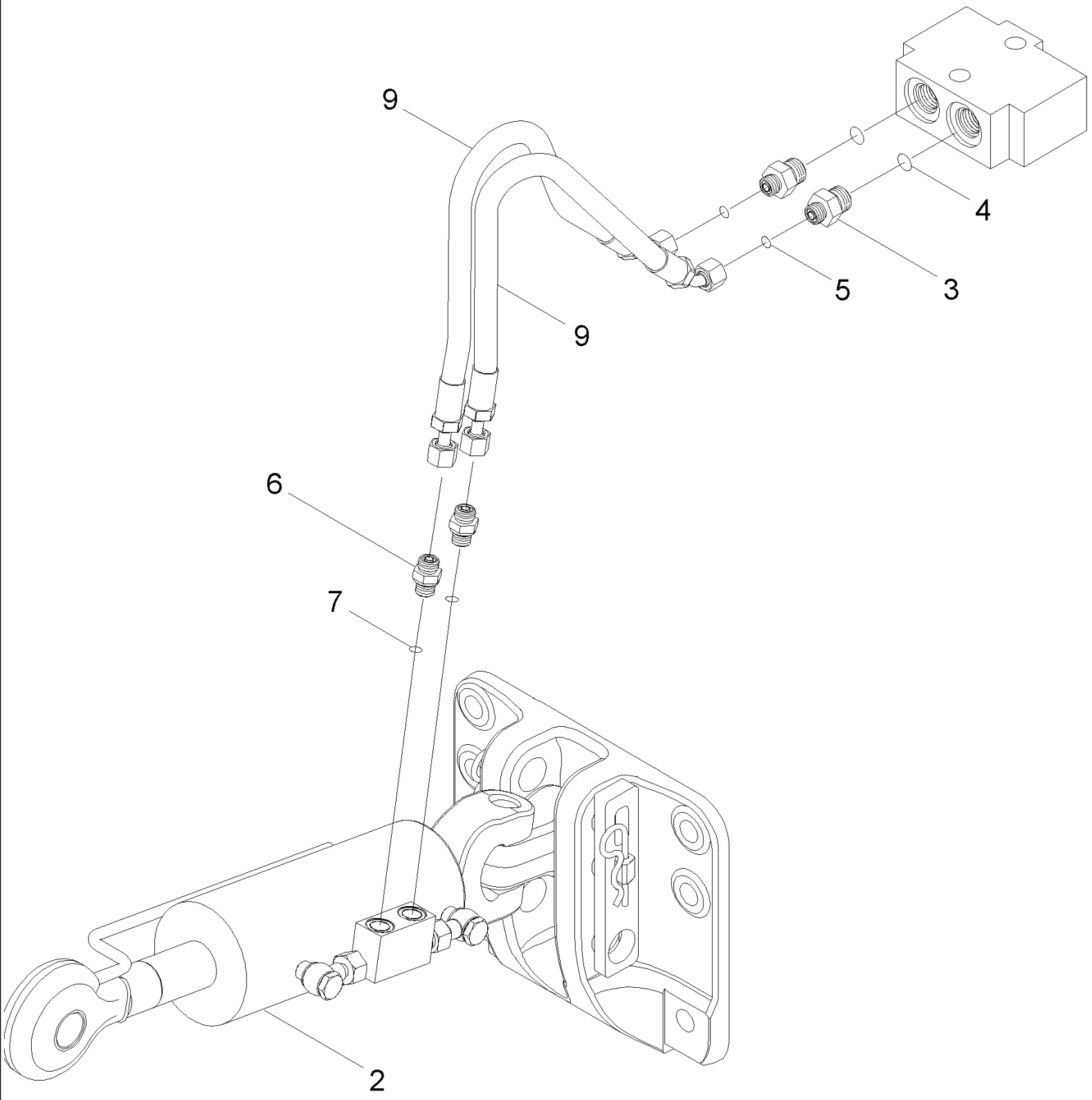

MX285 CASE IH MAGNUM TRACTOR (NORTH AMERICA)

08-09A(2) HYDRAULIC TOP LINK - HITCH

ссылка	Номер детали	Кол-во	Описание
2	87452848	1	LINK, TOP, Long, Used With Long Draft Arms, 1094 mm (43 in) Center To Center, See Figure 09-48B For Service Components
3	201-139	2	CONNECTOR, HYD., 11/16"-16 ORFS x 7/8"-14 ORB, Inc. 4, 5
4	237-6010	1	O-RING, 10-1, 90 Duro, .755" ID x .097" Thk,
5	238-6012	1	O-RING, -012, 90 Duro, .364" ID x .070" Thk,
6	87434646	2	UNION, Inc. 7
7	238-6012	1	O-RING, -012, 90 Duro, .364" ID x .070" Thk,
9	87441258	2	HOSE, 705 mm (27-3/4 in)

MX285 CASE IH MAGNUM TRACTOR (NORTH AMERICA)

08-09B HYDRAULIC LIFT LINK - HITCH, RIGHT HAND

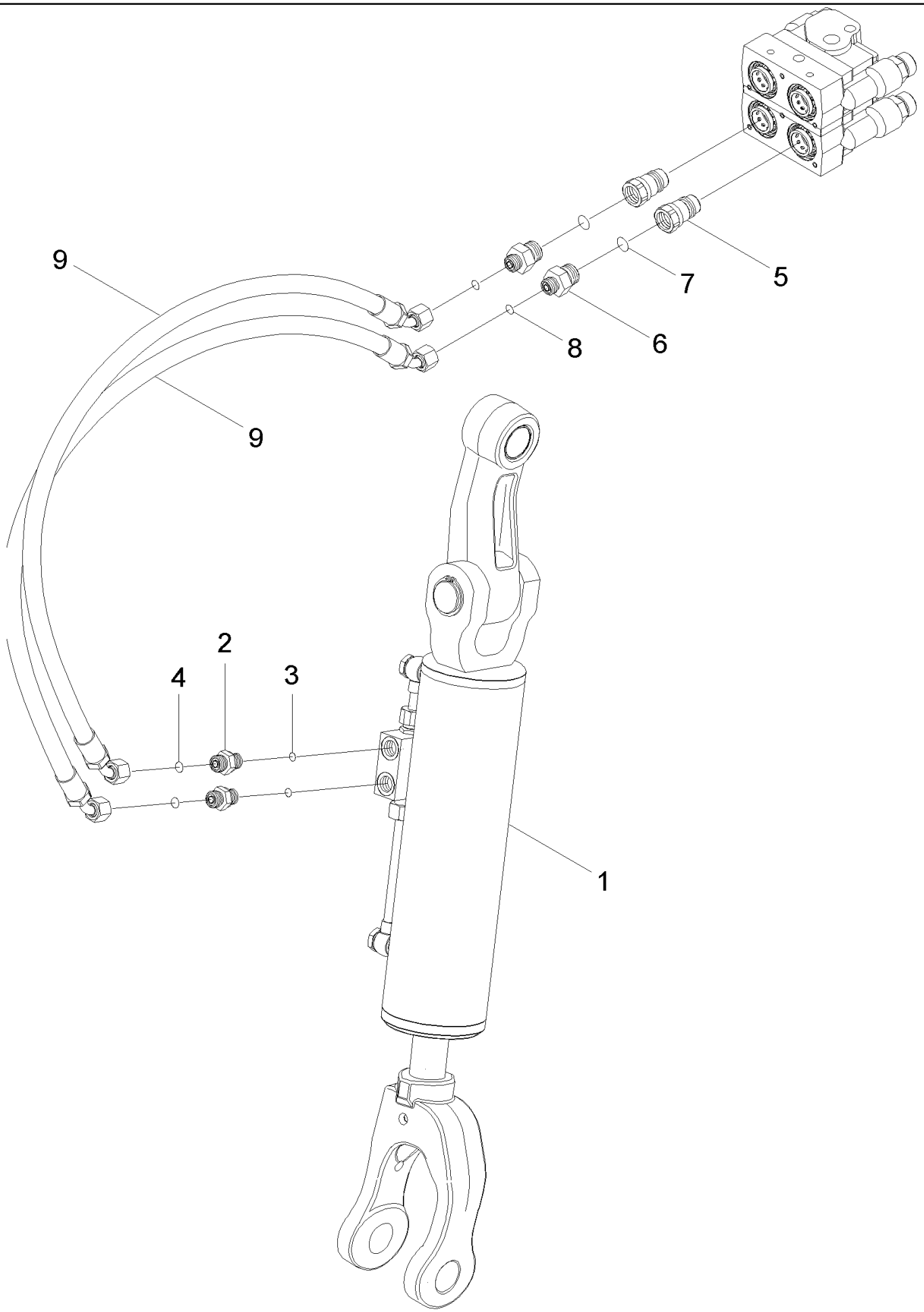

MX285 CASE IH MAGNUM TRACTOR (NORTH AMERICA)

08-09B HYDRAULIC LIFT LINK - HITCH, RIGHT HAND

ссылка	Номер детали	Кол-во	Описание
1	87424887	1	LINK, TOP, LINK ASSEMBLY, Hydraulic Lift, See Figure 09-49A For Service Components
2	700-157	2	CONNECTOR, HYD., 11/16"-16 ORFS x M16 x 1.5 ORB, Inc. 3, 4
3	637-63133	1	O-RING, Cl 6, 13.3MM ID x 2.2 Thk, 13,3 ID x 2,2
4	238-6012	1	O-RING, -012, 90 Duro, .364" ID x .070" Thk,
5	1272399C2	2	COUPLING, QUICK, MALE,
6	201-139	2	CONNECTOR, HYD., 11/16"-16 ORFS x 7/8"-14 ORB, Inc. 7, 8
7	237-6010	1	O-RING, 10-1, 90 Duro, .755" ID x .097" Thk,
8	238-6012	1	O-RING, -012, 90 Duro, .364" ID x .070" Thk,
9	87441257	2	HOSE, 805 mm (31-11/16 in)

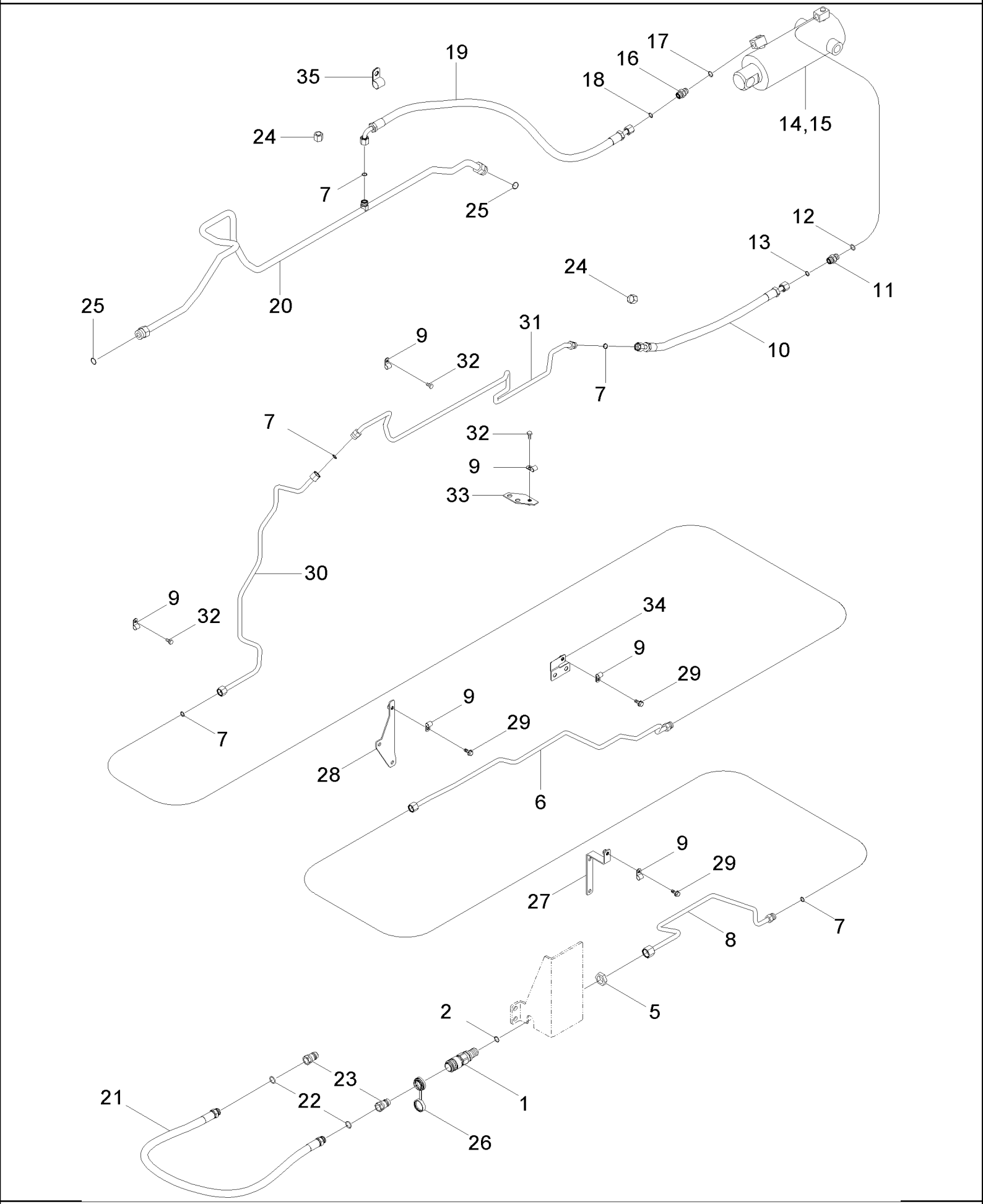
35
19
17
16
18
14,15
24
7
25
12
13
11
24
25
20
10
31
9
32
7
7
32
9
33
30
9
32
34
9
29
9
29
28
6
9
29
27
7
8
5
2
23
21
22
1
26

MX285 CASE IH MAGNUM TRACTOR (NORTH AMERICA)

08-10 HYDRAULIC SYSTEM - FRONT HITCH

ссылка	Номер детали	Кол-во	Описание
1	257481A2	1	COUPLING, BREAK AWAY, Inc. 2
2	238-6016	1	O-RING, -016, 90 Duro, .614" ID x .070" Thk,
5	701-919	1	NUT, LOCK, 1"-14, ORFS Blkhd, 1 in
6	446643A1	1	TUBE ASSY.,
7	238-6014	5	O-RING, -014, 90 Duro, .489" ID x .070" Thk,
8	86984904	1	TUBE ASSY.,
9	515-22127	5	CLAMP, 1/2", Insul, 5/16" Bolt, 1/2 ID
10	353711A1	1	HOSE,
11	353695A1	1	FITTING, 4 mm Orifice, Inc. 12, 13
12	637-63153	1	O-RING, Cl 6, 15.3MM ID x 2.2 Thk, 15,3 ID x 2,2
13	238-6014	1	O-RING, -014, 90 Duro, .489" ID x .070" Thk,
14	348474A1	1	CYLINDER ASSY., Inc. 29
15	281456A1	1	PACKAGE, SEALS,
16	700-102	1	CONNECTOR, HYD., 13/16"-16 ORFS x M18 x 1.5 ORB, 13/16 fc sl x 18 Or, Inc. 17, 18
17	637-63153	1	O-RING, Cl 6, 15.3MM ID x 2.2 Thk, 15,3 ID x 2,2
18	238-6014	1	O-RING, -014, 90 Duro, .489" ID x .070" Thk,
19	359879A1	1	HOSE,
20	433386A1	1	PIPE,
21	359851A1	1	HOSE,
22	237-6010	2	O-RING, 10-1, 90 Duro, .755" ID x .097" Thk,
23	1272399C2	2	COUPLING, QUICK, MALE, 7/8 NF, Self-Sealing, Male
24	701-905	2	CAP, 13/16"-16 ORFS, 13/16 NF, If Equipped
25	238-6018	2	O-RING, -018, 90 Duro, .739" ID x .070" Thk,
26	1954146C1	1	CAP,
27	446773A1	1	BRACKET,
28	446775A1	1	BRACKET,
29	844-8020	3	BOLT, Hex Flg, M8 x 20, 8.8,
30	384571A1	1	PIPE,
31	353703A1	1	PIPE,
32	614-8016	2	BOLT, Hex, M8 x 16, 8.8,
33	353693A1	1	SUPPORT,
34	362976A1	1	SUPPORT,
35	515-23238	1	CLAMP, 15/16", Insul, 3/8" Bolt,

08-11 HYDRAULIC SYSTEM - PTO/DIFFERENTIAL LOCK VALVE

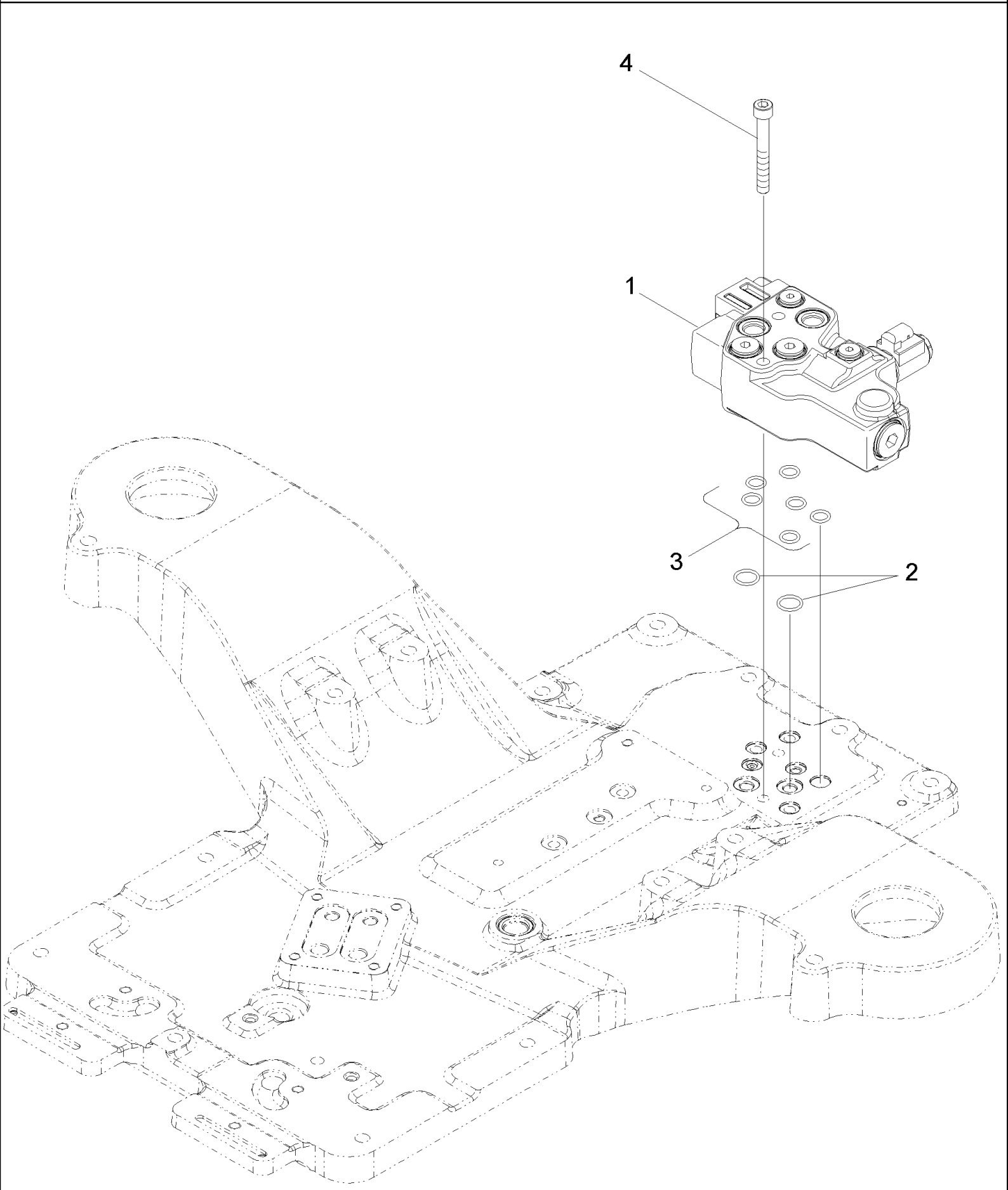

MX285 CASE IH MAGNUM TRACTOR (NORTH AMERICA)

08-11 HYDRAULIC SYSTEM - PTO/DIFFERENTIAL LOCK VALVE

ссылка	Номер детали	Кол-во	Описание
1	432906A1	1	VALVE, PTO/Differential Lock, See Figure 08-16
2	238-5115	2	O-RING, -115, 70 Duro, .674" ID x .103" Thk,
3	238-5112	6	O-RING, -112, 70 Duro, .487" ID x .103" Thk,
4	864-10080	2	SCREW, Hex Soc Hd, M10 x 80, 8.8, M10 x 80; 8.8

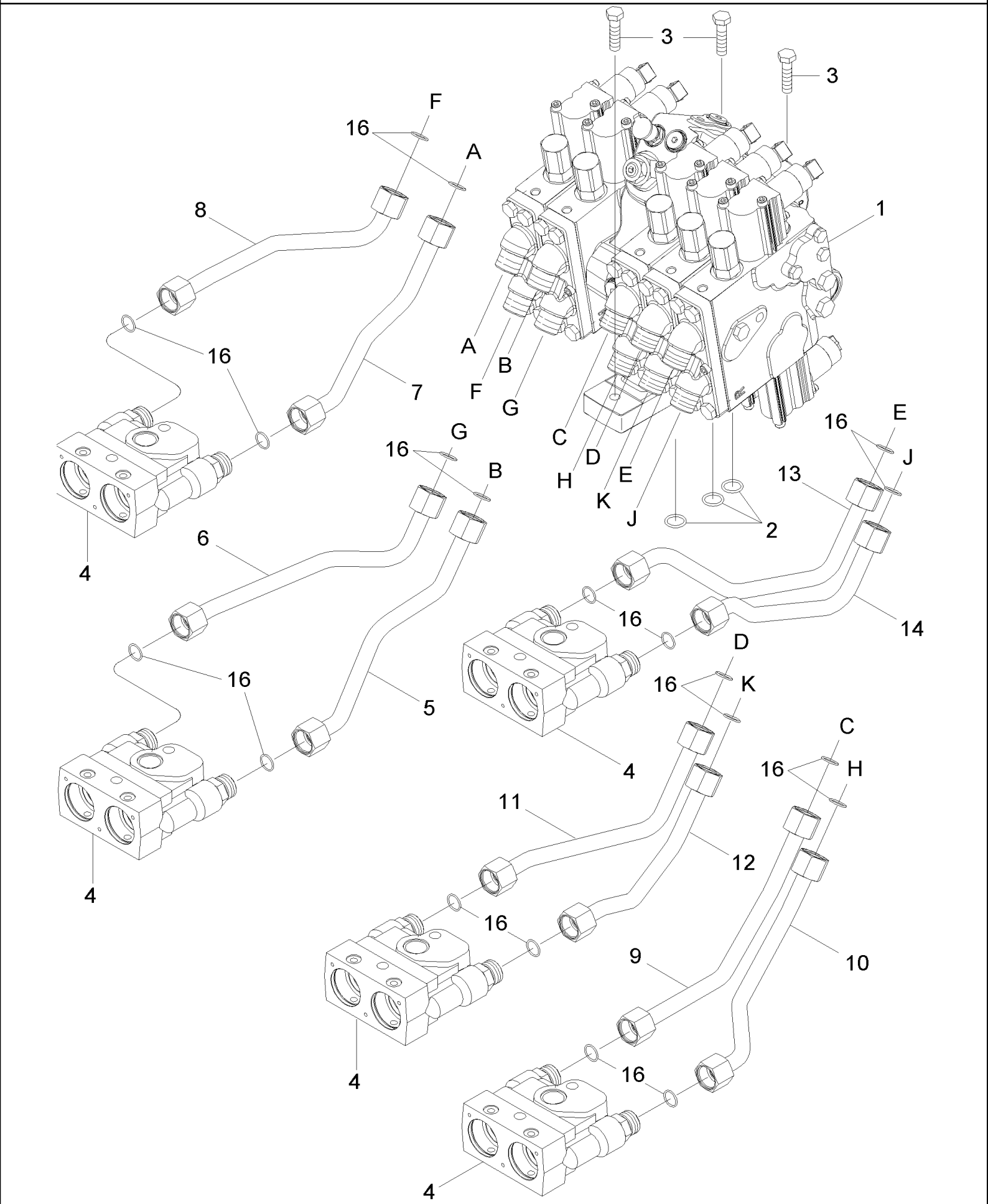
3
3
1
F
16
A
8
16
7
A
B
F
G
C
D
H
E
K
J
2
16
E
J
13
G
16
B
6
4
16
14
D
16
K
5
16
4
C
16
H
11
12
16
9
10
16
4
4
4

сылка	Номер детали	Кол-во	Описание
1	REF	1	INSTRUCTION, Valve Assy, Control, See Figure 08-17
2	238-5115	3	O-RING, -115, 70 Duro, .674" ID x .103" Thk,
3	614-10040	3	BOLT, Hex, M10 x 40, 8.8, Full Thd, M10 x 40; 8,8
4	REF	AR	INSTRUCTION, Coupler, Hydraulic, See Figure 08-21
5	436814A1	1	TUBE ASSY., 1st Raise
6	436813A1	1	TUBE ASSY., 1st Drop
7	436815A1	1	TUBE ASSY., 2nd Raise
8	436811A1	1	TUBE ASSY., 2nd Drop
9	426757A1	1	TUBE ASSY., 3rd Raise
10	426756A1	1	TUBE ASSY., 3rd Drop
11	412082A1	1	TUBE ASSY., 4th Raise
12	450500A1	1	TUBE ASSY., 4th Drop
13	412084A1	1	TUBE ASSY., 5th Raise
14	450501A1	1	TUBE ASSY., 5th Drop
16	238-6016	AR	O-RING, -016, 90 Duro, .614" ID x .070" Thk,

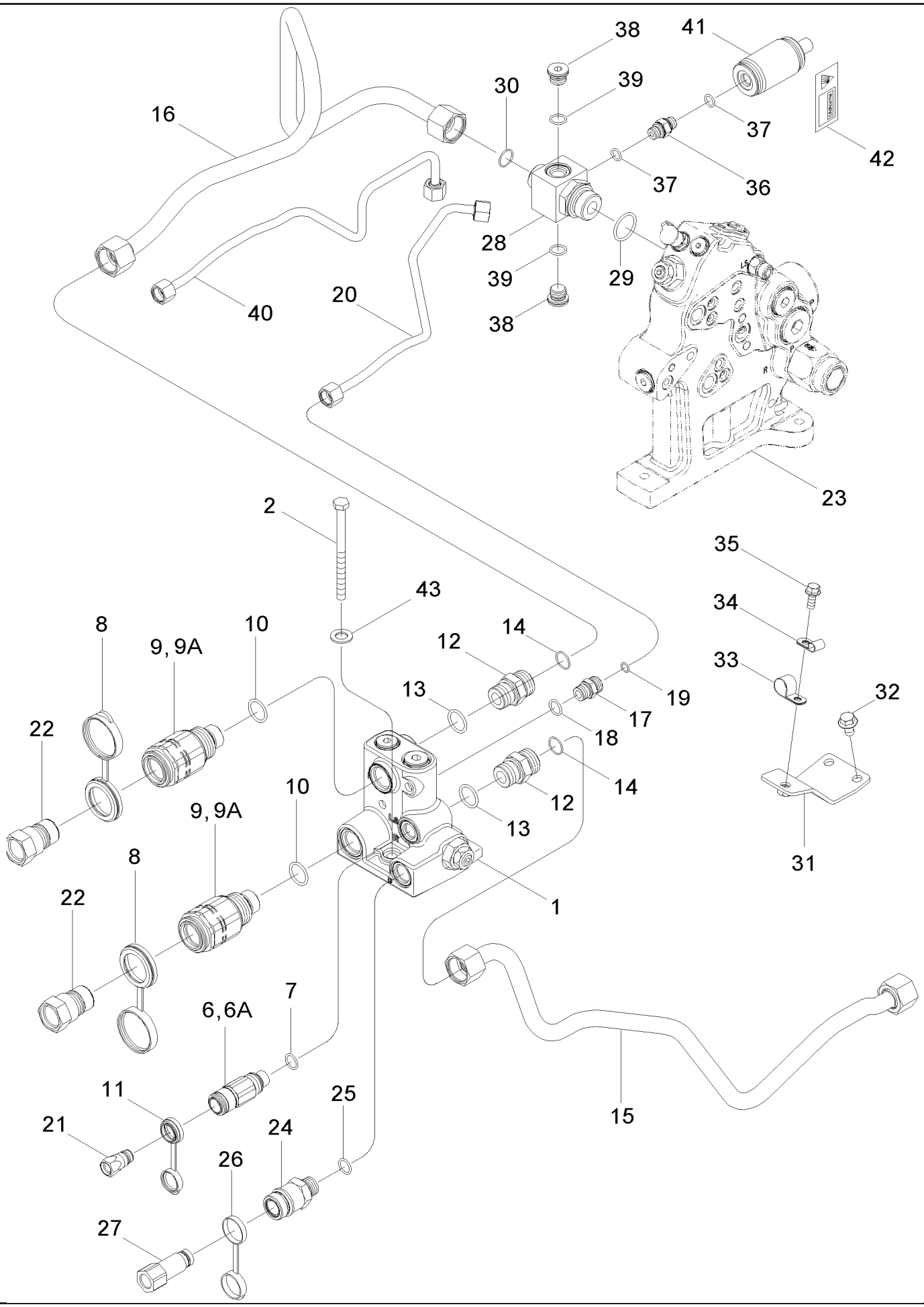
38
41
30
39
16
37
42
37
36
28
39
29
40
20
38
23
2
35
43
34
8
9, 9A
10
14
12
33
32
13
19
17
22
18
10
14
12
9, 9A
13
8
1
22
7
6, 6A
11
25
21
24
26
15
27
31

MX285 CASE IH MAGNUM TRACTOR (NORTH AMERICA)

08-13 HYDRAULIC SYSTEM - POWER BEYOND

ссылка	Номер детали	Кол-во	Описание
1	86989384	1	VALVE, HYDRAULIC, , See Figure 08-26, BSN AJB0304849
1	87442165	1	VALVE, HYDRAULIC, , See Figure 08-26, ASN AJB0304849
2	814-10150	2	BOLT, Hex, M10 x 150, 8.8, M10 x 150
6	294603A1	1	BODY, 1/4 in, In. 7
6A	445014A1	1	KIT, SEALS,
7	637-63153	1	O-RING, Cl 6, 15.3MM ID x 2.2 Thk, 15,3 ID x 2,2
8	334216A1	2	CAP,
9	298291A1	2	BODY, 3/4 in, Inc.10
9A	445015A1	1	KIT, SEALS,
10	637-64236	1	O-RING, Cl 6, 23.6MM ID x 2.9 Thk, 23,6 ID x 2,9
11	334218A1	1	CAP,
12	700-104	4	CONNECTOR, HYD., 1 3/16"-12 ORFS x M27 x 2 ORB, 1-3/16 fc sl x 27 Or, Inc. 13, 14
13	637-64236	1	O-RING, Cl 6, 23.6MM ID x 2.9 Thk, 23,6 ID x 2,9
14	238-6018	1	O-RING, -018, 90 Duro, .739" ID x .070" Thk,
15	87401138	1	TUBE ASSY., Return
16	87401136	1	TUBE ASSY., Supply
17	700-106	1	CONNECTOR, HYD., 11/16"-16 ORFS x M18 x 1.5 ORB, 11/16 fc sl x 18 Or, Inc. 18, 19
18	637-63153	1	O-RING, Cl 6, 15.3MM ID x 2.2 Thk, 15,3 ID x 2,2
19	238-6012	1	O-RING, -012, 90 Duro, .364" ID x .070" Thk,
20	87401137	1	TUBE, Load Sense, With Hitch
21	347756A1	1	COUPLING, 1/4 in
22	347755A1	1	COUPLING, 3/4 in
23	REF	1	INSTRUCTION, Manifold, See Figure 08-18
24	380739A1	1	COUPLING, BREAK AWAY, 3/8, Inc. 25
25	637-63153	1	O-RING, Cl 6, 15.3MM ID x 2.2 Thk, 15,3 ID x 2,2
26	380740A1	1	CAP,
27	385358A1	1	COUPLING, 3/8
28	87402551	1	TEE, 1-3/16 fc sl x 18 Or x 33 Or, Inc. 29, 30
29	637-64296	1	O-RING, Cl 6, 29.6MM ID x 2.9 Thk, 29,6 ID x 2,9
30	238-6018	1	O-RING, -018, 90 Duro, .739" ID x .070" Thk,
31	87402632	1	BRACKET,
32	844-10016	2	SCREW, Hex Flg, M10 x 16, 8.8, Full Thd, M10 x 16; 8.8
33	515-22190	1	CLAMP, 3/4", Insul, 5/16" Bolt, 3/4 ID
34	515-2295	1	CLAMP, 3/8", Insul, 5/16" Bolt, 3/8 ID
35	844-8020	1	BOLT, Hex Flg, M8 x 20, 8.8,
36	87403003	1	CONNECTOR, HYD., 12 Or, inc. 37
37	637-63113	2	O-RING, Cl 6, 11.3MM ID x 2.2 Thk, 11,3 ID x 2,2
38	221578A1	2	PLUG, Hex Soc, M18 x 1.5, ORB, Inc. 39
39	637-63113	1	O-RING, Cl 6, 11.3MM ID x 2.2 Thk, 11,3 ID x 2,2
40	87404587	1	TUBE, Load Sense, Without Hitch
41	87402747	1	ACCUMULATOR,
42	82029752	1	PLAQUE, DATA,
43	895-18010	2	WASHER, M10 x 18 x 1.6, 10,5 x 18 x 1,6 mm

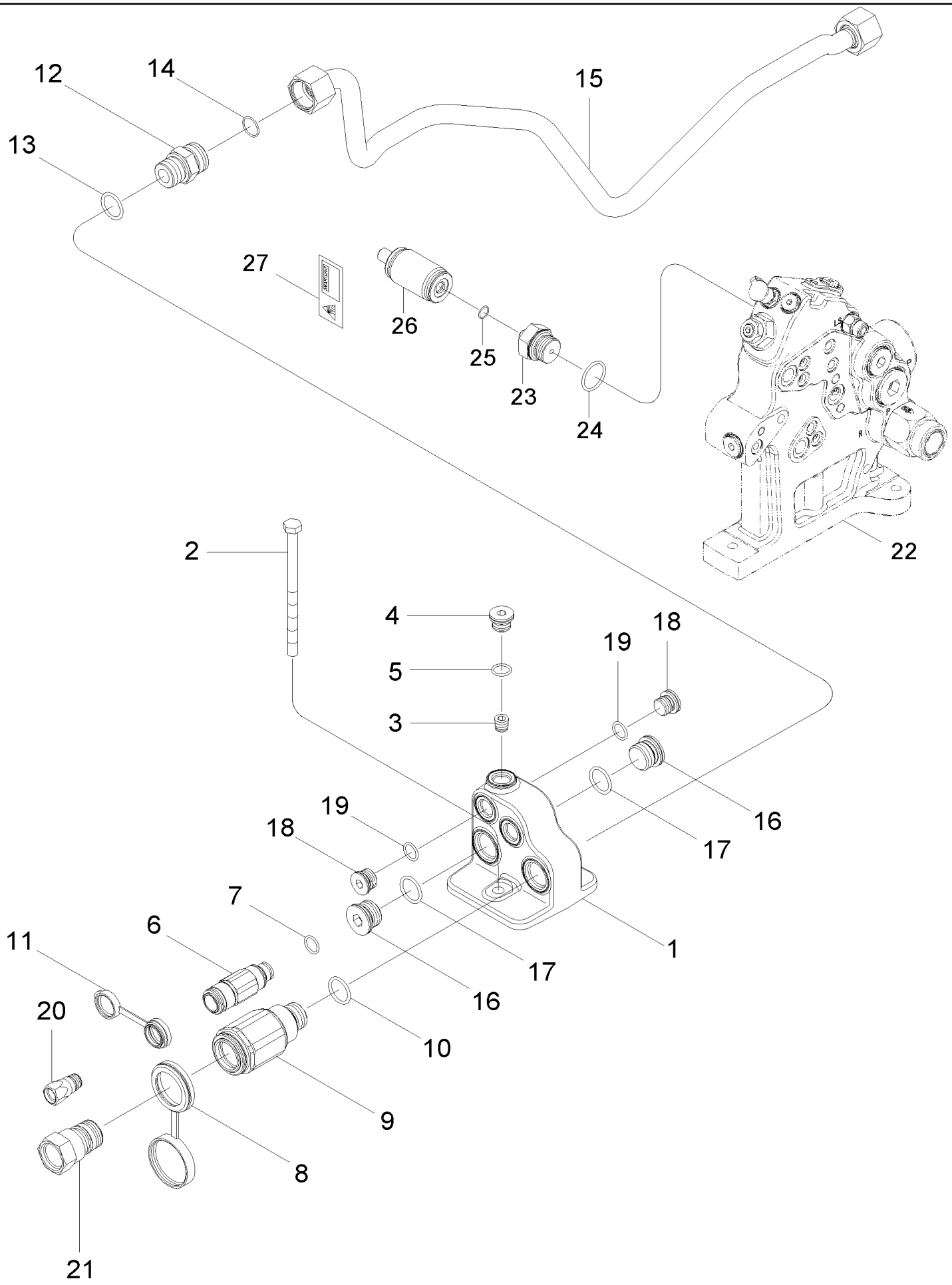
12
14
15
13
27
26
25
23
24
22
2
4
5
3
19
18
16
17
1
7
6
11
20
10
9
8
21

MX285 CASE IH MAGNUM TRACTOR (NORTH AMERICA)

08-14 HYDRAULIC SYSTEM - MOTOR RETURN

ссылка	Номер детали	Кол-во	Описание
1	387929A1	1	VALVE,
2	814-10150	2	BOLT, Hex, M10 x 150, 8.8, M10 x 150
3	217-432	1	PLUG, Hex Soc, 1/4"-18, 1/4 PT
4	221578A1	1	PLUG, Hex Soc, M18 x 1.5, ORB, M18 - 1,5, Inc. 5
5	637-63153	1	O-RING, Cl 6, 15.3MM ID x 2.2 Thk, 15,3 ID x 2,2
6	380739A1	1	COUPLING, BREAK AWAY, 3/8, Inc. 7
7	637-63193	1	O-RING, Cl 6, 19.3MM ID x 2.2 Thk, 19,3 ID x 2,2
8	334216A1	1	CAP,
9	298291A1	1	BODY, 3/4 in, Inc. 10
9A	445015A1	1	KIT, SEALS,
10	637-64236	1	O-RING, Cl 6, 23.6MM ID x 2.9 Thk, 23,6 ID x 2,9
11	380740A1	1	CAP,
12	700-104	1	CONNECTOR, HYD., 1 3/16"-12 ORFS x M27 x 2 ORB, 1-3/16 fc sl x 27 Or, Inc. 13, 14
13	637-64236	1	O-RING, Cl 6, 23.6MM ID x 2.9 Thk, 23,6 ID x 2,9
14	238-6018	1	O-RING, -018, 90 Duro, .739" ID x .070" Thk,
15	450502A1	1	TUBE ASSY.,
16	221580A1	3	PLUG, Hex Soc, M27 x 2, ORB, M27 - 2, Inc. 17
17	637-64236	1	O-RING, Cl 6, 23.6MM ID x 2.9 Thk, 23,6 ID x 2,9
18	221578A1	3	PLUG, Hex Soc, M18 x 1.5, ORB, M18 - 1,5, Inc. 19
19	637-63153	1	O-RING, Cl 6, 15.3MM ID x 2.2 Thk, 15,3 ID x 2,2
20	385358A1	1	COUPLING, 3/8
21	347755A1	1	COUPLING, 3/4 in
22	REF	1	INSTRUCTION, Manifold, See Figure 08-18
23	87402820	2	CONNECTOR, HYD., M33 Or x M14 Or, Inc. 24, 25
24	637-64296	1	O-RING, Cl 6, 29.6MM ID x 2.9 Thk, 29,6 ID x 2,9
25	637-63113	1	O-RING, Cl 6, 11.3MM ID x 2.2 Thk, 11,3 ID x 2,2
26	87402747	1	ACCUMULATOR,
27	82029752	1	PLAQUE, DATA,

MX285 CASE IH MAGNUM TRACTOR (NORTH AMERICA)

08-15 PRIORITY AND REGULATOR VALVE ASSEMBLY

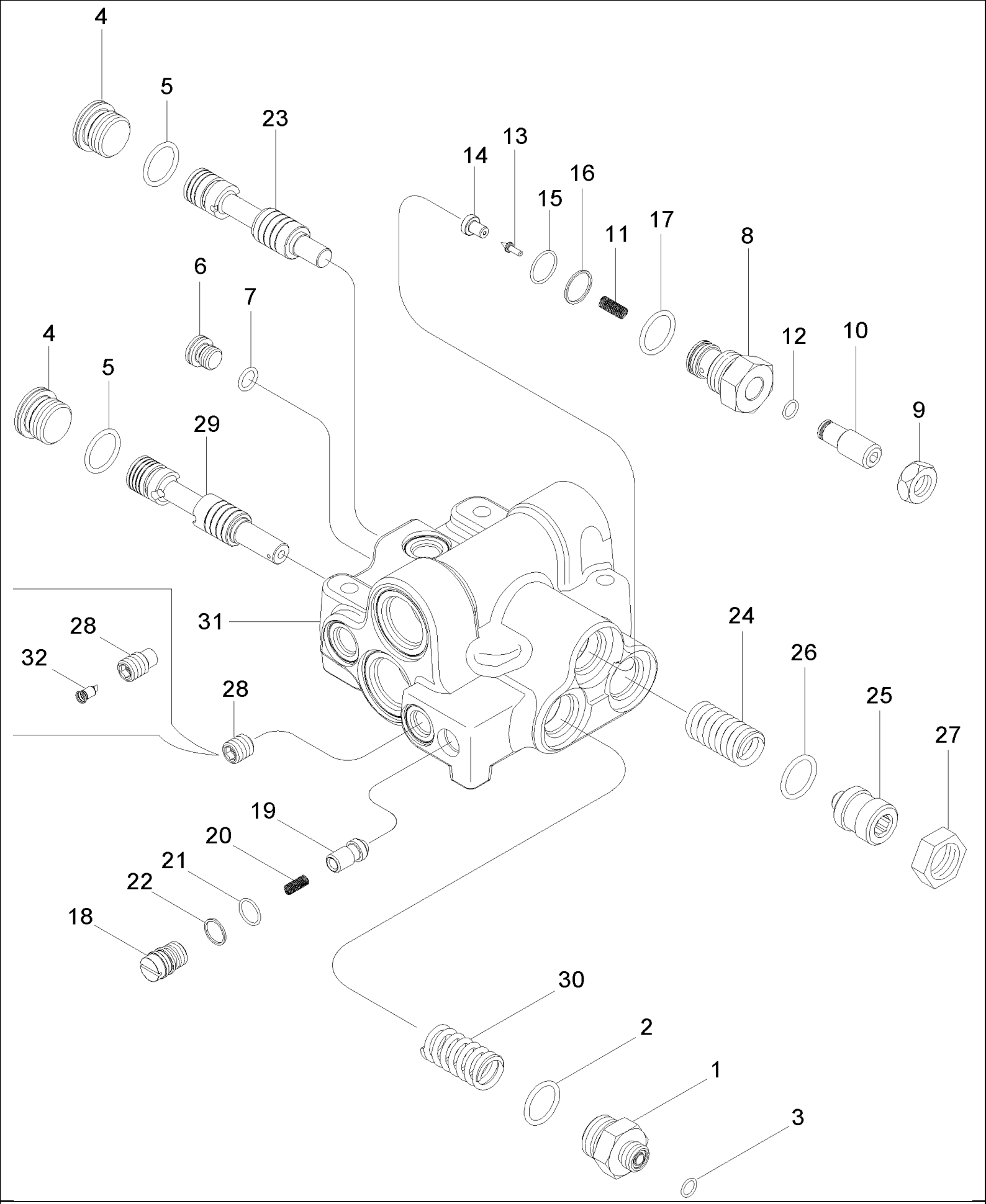

MX285 CASE IH MAGNUM TRACTOR (NORTH AMERICA)

08-15 PRIORITY AND REGULATOR VALVE ASSEMBLY

ссылка	Номер детали	Кол-во	Описание
	404438A5	1	VALVE, Priority And Regulator, Inc. 1 - 32, BSN AJB0304793
	87427822	1	VALVE, Priority And Regulator, Inc. 1 - 31, ASN AJB0304793
1	313940A1	1	FITTING, Inc. 2, 3
2	237-6012	1	O-RING, 12-1, 90 Duro, .924 ID x .118" Thk,
3	238-6012	1	O-RING, -012, 90 Duro, .364" ID x .070" Thk,
4	221580A1	2	PLUG, Hex Soc, M27 x 2, ORB, M27, Inc. 5
5	637-64236	1	O-RING, Cl 6, 23.6MM ID x 2.9 Thk, 23,6 ID x 2,9
6	221576A1	1	PLUG, Hex Soc, M14 x 1.5, ORB, M14, Inc. 7
7	637-63113	1	O-RING, Cl 6, 11.3MM ID x 2.2 Thk, 11,3 ID x 2,2
	G108868	1	VALVE, PRESSURE RELIEF, Inc. 8 - 17
8	NSS	1	NOT SERVICED SEPARATELY, Cap
9	425-1510	1	NUT, Jam, 5/8"-18, G5, 5/8 NF
10	NSS	1	NOT SERVICED SEPARATELY, Plug
11	NSS	1	NOT SERVICED SEPARATELY, Spring
12	238-6012	1	O-RING, -012, 90 Duro, .364" ID x .070" Thk,
13	NSS	1	NOT SERVICED SEPARATELY, Poppet
14	NSS	1	NOT SERVICED SEPARATELY, Seat
15	238-6018	1	O-RING, -018, 90 Duro, .739" ID x .070" Thk,
16	G35540	1	RING,
17	237-6012	1	O-RING, 12-1, 90 Duro, .924 ID x .118" Thk,
	1542563C1	1	VALVE, CHECK, Inc. 18 - 22
18	NSS	1	NOT SERVICED SEPARATELY, Plug
19	1543329C1	1	POPPET, VALVE,
20	NSS	1	NOT SERVICED SEPARATELY, Spring
21	238-6015	1	O-RING, -015, 90 Duro, .551" ID x .070" Thk,
22	G108723	1	RING,
23	404442A1	1	SPOOL,
24	448102A2	1	SPRING,
25	313941A1	1	PLUG, Inc. 26
26	237-6012	1	O-RING, 12-1, 90 Duro, .924 ID x .118" Thk,
27	218-1280	1	NUT, LOCK, Blkhd, 1 1/16"-12, 1-1/16
28	118923A2	1	PLUG, With Orifice, Inc. 32, BSN AJB0304793
28	87427769	1	PLUG, , ASN AJB0304793
29	404443A2	1	SPOOL, , BSN AJB0304793
29	87432325	1	SPOOL, , ASN AJB0304793
30	408447A1	1	SPRING, COMPRESSION,
31	NSS	1	NOT SERVICED SEPARATELY, Body
32	133519C1	1	SCREEN, , BSN AJB0304793

MX285 CASE IH MAGNUM TRACTOR (NORTH AMERICA)

08-16 PTO AND DIFFERENTIAL LOCK VALVE ASSEMBLY

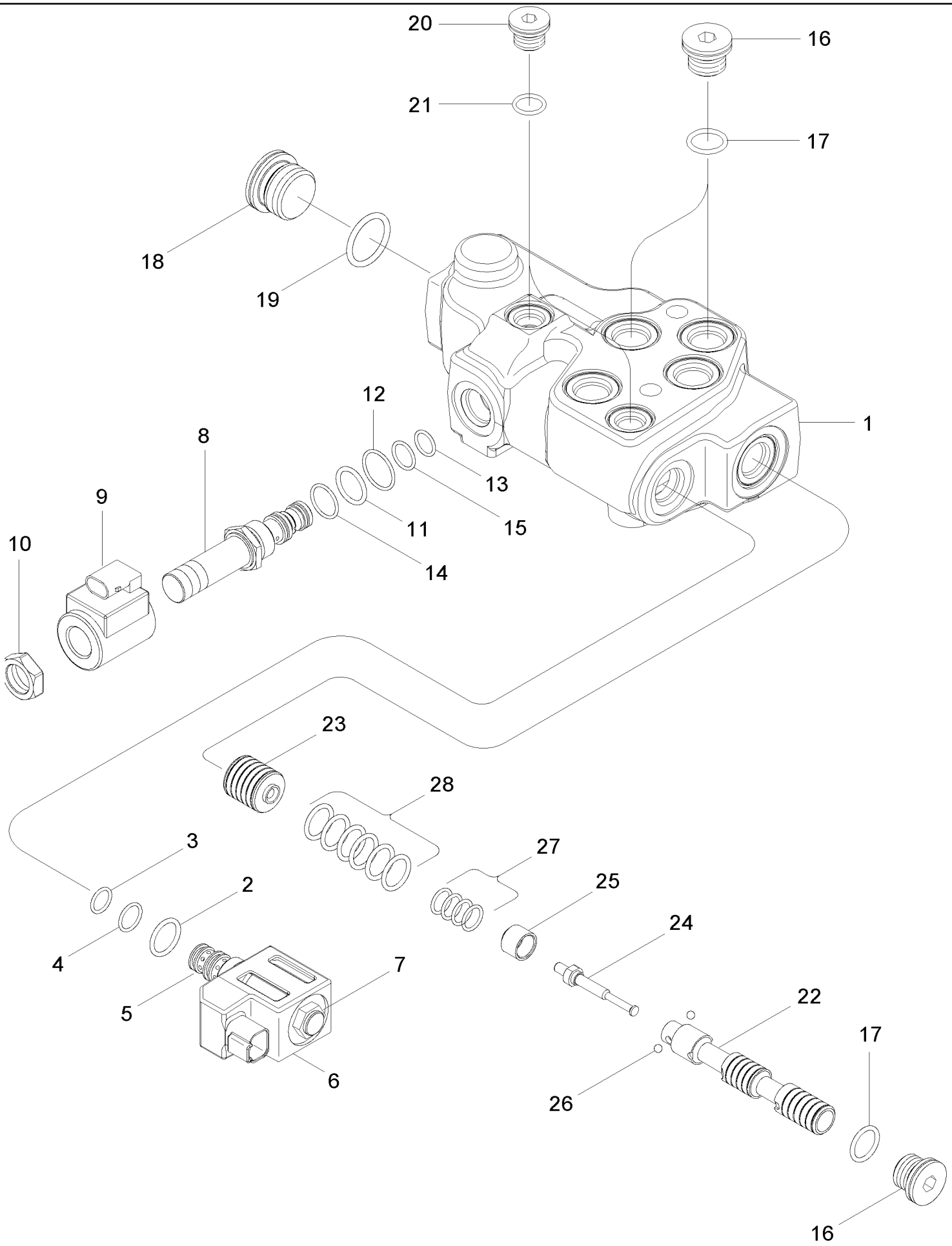

MX285 CASE IH MAGNUM TRACTOR (NORTH AMERICA)

08-16 PTO AND DIFFERENTIAL LOCK VALVE ASSEMBLY

ссылка	Номер детали	Кол-во	Описание
	432906A1	1	VALVE, PTO And Differential Lock, Inc. 1 - 27
1	NSS	1	NOT SERVICED SEPARATELY, Body
	349295A1	1	SOLENOID, Valve, Differential Lock, Inc. 2 - 7
2	237-6008	1	O-RING, 8-1, 90 Duro, .644" ID x .087" Thk,
3	238-5013	1	O-RING, -013, 70 Duro, .426" ID x .070" Thk,
4	238-5014	1	O-RING, -014, 70 Duro, .489" ID x .070" Thk,
5	NSS	1	NOT SERVICED SEPARATELY, Core
6	298614A1	1	COIL,
7	349292A1	1	NUT,
	239552A2	1	VALVE, Solenoid, PTO, Inc. 8 -14
8	NSS	1	NOT SERVICED SEPARATELY, Core
9	NSS	1	NOT SERVICED SEPARATELY, Coil
10	NSS	1	NOT SERVICED SEPARATELY, Nut
	308245A1	1	KIT, SEALS, Inc. 11 - 14
11	238-7016	1	O-RING, -016, Cl 7, .614" ID x .070" Thk,
12	238-7018	1	O-RING, -018, Cl 7, .739" ID x .070" Thk,
13	238-6008	1	O-RING, -008, 90 Duro, .176" ID x .070" Thk,
14	238-5014	1	O-RING, -014, 70 Duro, .489" ID x .070" Thk,
15	238-5013	1	O-RING, -013, 70 Duro, .426" ID x .070" Thk,
16	221578A1	3	PLUG, Hex Soc, M18 x 1.5, ORB, M18, Inc. 17
17	637-63153	1	O-RING, Cl 6, 15.3MM ID x 2.2 Thk, 15,3 ID x 2,2
18	221580A1	3	PLUG, Hex Soc, M27 x 2, ORB, M27, Inc. 19
19	637-64236	1	O-RING, Cl 6, 23.6MM ID x 2.9 Thk, 23,6 ID x 2,9
20	221576A1	2	PLUG, Hex Soc, M14 x 1.5, ORB, M14, Inc. 21
21	637-63113	1	O-RING, Cl 6, 11.3MM ID x 2.2 Thk, 11,3 ID x 2,2
	283642A4	1	SPOOL, Inc. 22 - 28
22	NSS	1	NOT SERVICED SEPARATELY, Spool
23	NSS	1	NOT SERVICED SEPARATELY, Piston
24	NSS	1	NOT SERVICED SEPARATELY, Pin
25	NSS	1	NOT SERVICED SEPARATELY, Sleeve
26	NSS	2	NOT SERVICED SEPARATELY, Ball
27	NSS	1	NOT SERVICED SEPARATELY, Spring
28	NSS	1	NOT SERVICED SEPARATELY, Spring

MX285 CASE IH MAGNUM TRACTOR (NORTH AMERICA)

08-17 REMOTE HYDRAULIC VALVE STACK

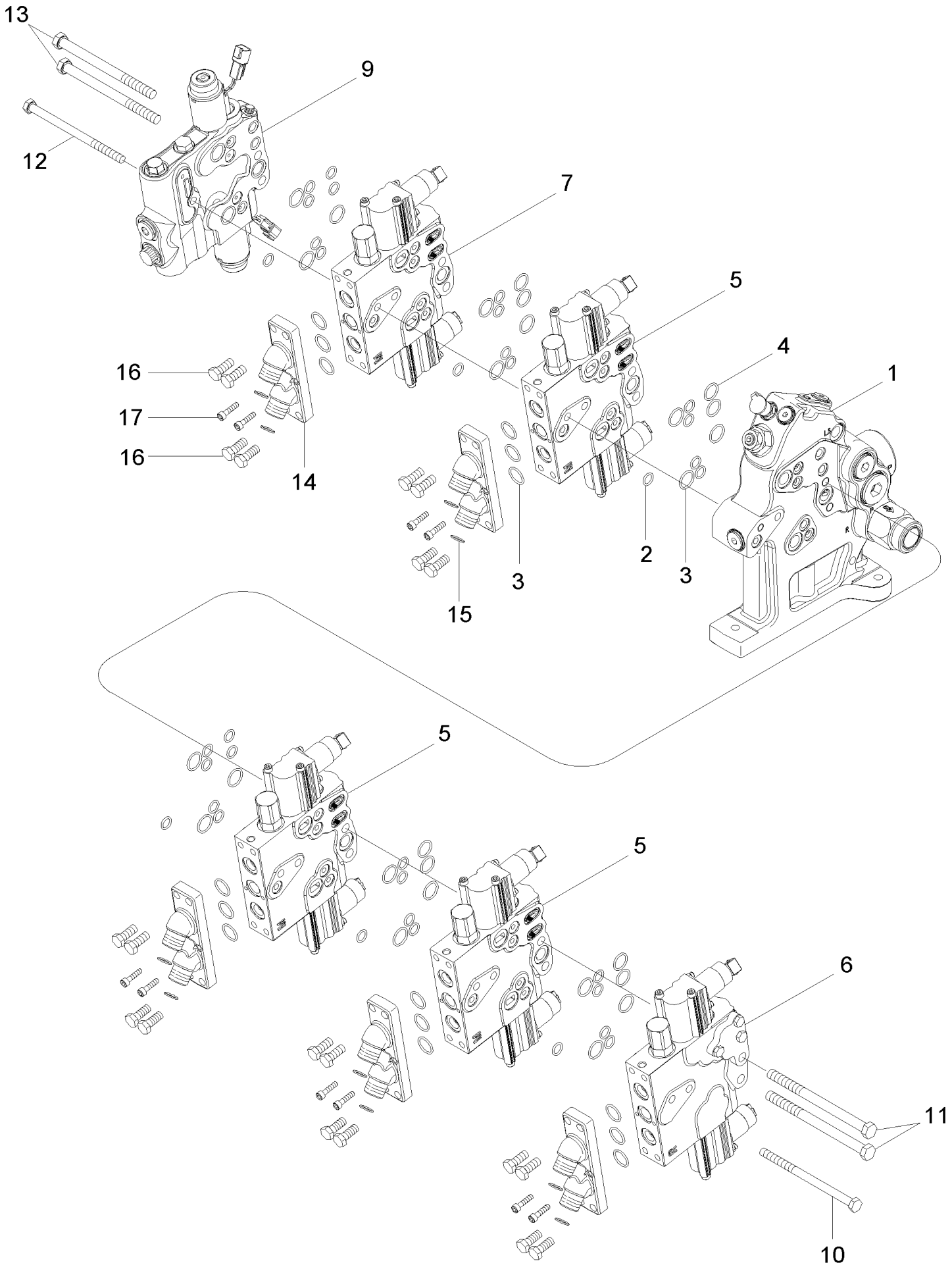

MX285 CASE IH MAGNUM TRACTOR (NORTH AMERICA)

08-17 REMOTE HYDRAULIC VALVE STACK

ссылка	Номер детали	Кол-во	Описание
1	447528A3	1	VALVE, Manifold, See Figure 08-18, BSN AJB0304776
1	447528A4	1	VALVE, Manifold, See Figure 08-18, ASN AJB0304776
2	238-6112	AR	O-RING, -112, 90 Duro, .487" ID x .103" Thk,
3	238-6117	AR	O-RING, -117, 90 Duro, .799" ID x .103" Thk,
4	238-6116	AR	O-RING, -116, 90 Duro, .737" ID x .103" Thk,
5	447226A5	AR	VALVE, Standard, See Figure 08-19
6	447220A6	1	VALVE, Right Hand End, See Figure 08-19
7	447223A4	1	VALVE, Left Hand End, Without Hitch, See Figure 08-19
7	447226A5	AR	VALVE, Left Hand End With Hitch, See Figure 08-19
9	412509A3	1	VALVE, Hitch, See Figure 08-20, BSN AJB0303604
9	412509A4	1	VALVE, Hitch, See Figure 08-20, BTW AJB0303604 & AJB0362561
9	87371677	1	VALVE, Hitch, See Figure 08-20A, ASN AJB0362562
10	828-10070	1	BOLT, Hex, M10 x 70, 10.9, M10 x 70; 10.9, 3 Remotes
10	828-10110	1	BOLT, Hex, M10 x 110, 10.9, M10 x 110; 10.9, 4 Remotes
10	828-10160	1	BOLT, Hex, M10 x 160, 10.9, M10 x 160; 10.9, 5 Remotes
11	828-12080	2	BOLT, Hex, M12 x 80, 10.9, M12 x 80; 10.9, 3 Remotes
11	828-12120	2	BOLT, Hex, M10 x 120, 10.9, M12 x 120; 10.9, 4 Remotes
11	828-12170	2	BOLT, Hex, M12 x 170, 10.9, M12 x 170; 10.9, 5 Remotes
12	828-10110	1	BOLT, Hex, M10 x 110, 10.9, M10 x 110; 10.9, Without Hitch
12	828-10160	1	BOLT, Hex, M10 x 160, 10.9, M10 x 160; 10.9, With Hitch
13	828-12110	2	BOLT, Hex, M12 x 110, 10.9, M12 x 110; 10.9, Without Hitch
13	828-12160	2	BOLT, Hex, M12 x 160, 10.9, M12 x 160; 10.9, With Hitch
14	435643A1	AR	COVER, Inc. 15
15	238-6016	2	O-RING, -016, 90 Duro, .614" ID x .070" Thk,
16	628-10025	AR	SCREW, Hex, M10 x 25, 10.9, Full Thd, M10 x 25, 10.9
17	864-6025	AR	SCREW, Hex Soc Hd, M6 x 25, 8.8, M6 x 25; 8.8

MX285 CASE IH MAGNUM TRACTOR (NORTH AMERICA)

08-18 MANIFOLD VALVE ASSEMBLY

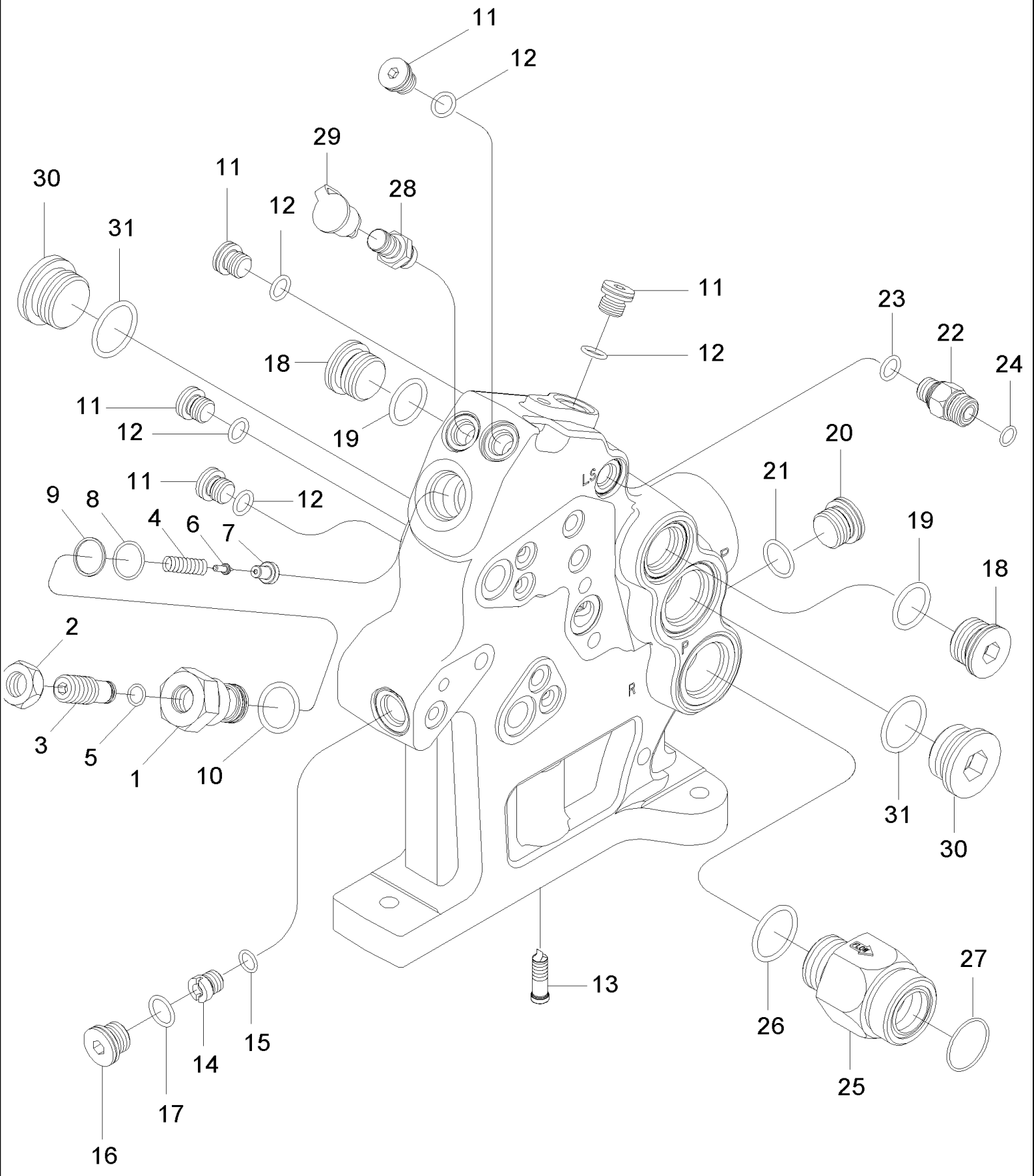

MX285 CASE IH MAGNUM TRACTOR (NORTH AMERICA)

08-18 MANIFOLD VALVE ASSEMBLY

ссылка	Номер детали	Кол-во	Описание
	447528A3	1	VALVE, Manifold, Inc. 1 - 31, BSN AJB0304776
	447528A4	1	VALVE, Manifold, Inc. 1 - 31, ASN AJB0304776
	G108868	1	VALVE, PRESSURE RELIEF, Inc. 1 - 10
1	NSS	1	NOT SERVICED SEPARATELY, Cap
2	425-1510	1	NUT, Jam, 5/8"-18, G5, 5/8 NF
3	NSS	1	NOT SERVICED SEPARATELY, Plug
4	NSS	1	NOT SERVICED SEPARATELY, Spring
5	238-6012	1	O-RING, -012, 90 Duro, .364" ID x .070" Thk,
6	NSS	1	NOT SERVICED SEPARATELY, Poppet
7	NSS	1	NOT SERVICED SEPARATELY, Seat
8	238-6018	1	O-RING, -018, 90 Duro, .739" ID x .070" Thk,
9	G35540	1	RING,
10	237-6012	1	O-RING, 12-1, 90 Duro, .924 ID x .118" Thk,
11	221576A1	5	PLUG, Hex Soc, M14 x 1.5, ORB, M14, Inc. 12
12	637-63113	1	O-RING, Cl 6, 11.3MM ID x 2.2 Thk, 11,3 ID x 2,2
13	326965A1	1	SCREEN,
14	431479A1	1	VALVE, CHECK, Inc. 15
16	221578A1	1	PLUG, Hex Soc, M18 x 1.5, ORB, M18, Inc. 17
17	637-63153	1	O-RING, Cl 6, 15.3MM ID x 2.2 Thk, 15,3 ID x 2,2
18	221580A1	2	PLUG, Hex Soc, M27 x 2, ORB, M27, Inc.19
19	637-64236	1	O-RING, Cl 6, 23.6MM ID x 2.9 Thk, 23,6 ID x 2,9
20	221579A1	1	PLUG, Hex Soc, M22 x 1.5, ORB, M22, Inc. 21
21	637-63193	1	O-RING, Cl 6, 19.3MM ID x 2.2 Thk, 19,3 ID x 2,2
22	223971A1	1	VALVE, CHECK, Inc. 23, 24, BSN AJB0304776
22	87429247	1	VALVE, CHECK, Inc. 23, 24, ASN AJB0304776
23	637-63113	1	O-RING, Cl 6, 11.3MM ID x 2.2 Thk, 11,3 ID x 2,2
24	238-6012	1	O-RING, -012, 90 Duro, .364" ID x .070" Thk,
25	254851A1	1	VALVE, CHECK, Inc. 26, 27
26	637-64296	1	O-RING, Cl 6, 29.6MM ID x 2.9 Thk, 29,6 ID x 2,9
27	238-6025	1	O-RING, -025, 90 Duro, 1.176" ID x .070" Thk,
28	178889A1	1	FITTING, Inc. 29
29	143349A1	1	CAP,
30	221527A1	2	PLUG, Hex Soc, M33 x 2, ORB, M33 Or, Inc. 31
31	637-64296	1	O-RING, Cl 6, 29.6MM ID x 2.9 Thk, 29,6 ID x 2,9
32	87441298	1	KIT, SERVICE, (Not Shown)
15	237-6005	1	O-RING, 5-1, 90 Duro, .414" ID x .072" Thk,

08-19 REMOTE HYDRAULIC CONTROL VALVE

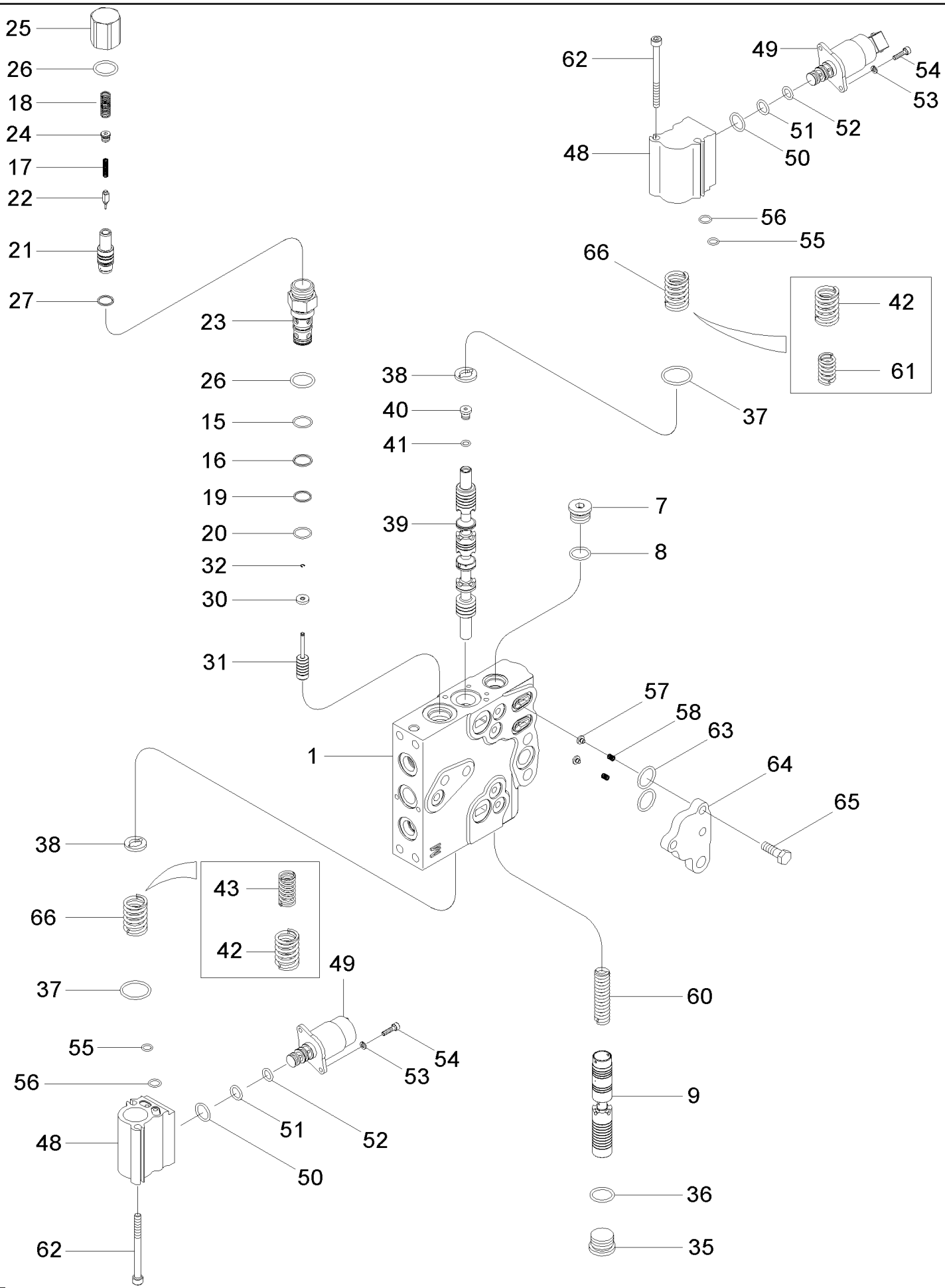

MX285 CASE IH MAGNUM TRACTOR (NORTH AMERICA)

08-19 REMOTE HYDRAULIC CONTROL VALVE

ссылка	Номер детали	Кол-во	Описание
	447226A5	AR	VALVE, Standard, Inc. 1 - 62
	447220A6	1	VALVE, Right Hand End, Inc. 1 - 65
	447223A4	1	VALVE, Left Hand End Without Hitch, Inc. 1 - 62
	447226A5	1	VALVE, Left Hand End With Hitch, Inc. 1 - 62
1	NSS	1	NOT SERVICED SEPARATELY, Body
7	71100209	1	PLUG, Hex Soc, 3/4"-16 ORB, 3/4 Or, Inc. 8
8	237-6010	1	O-RING, 10-1, 90 Duro, .755" ID x .097" Thk,
9	446403A1	1	SPOOL,
	278550A2	1	VALVE, CHECK, Inc. 15 - 27
15	238-6016	1	O-RING, -016, 90 Duro, .614" ID x .070" Thk,
16	G103862	1	RING,
17	NSS	1	NOT SERVICED SEPARATELY, Spring
18	NSS	1	NOT SERVICED SEPARATELY, Spring
19	G108723	1	RING,
20	238-6015	1	O-RING, -015, 90 Duro, .551" ID x .070" Thk,
21	NSS	1	NOT SERVICED SEPARATELY, Poppet, Valve
22	NSS	1	NOT SERVICED SEPARATELY, Poppet, Valve
23	NSS	1	NOT SERVICED SEPARATELY, Body
24	NSS	1	NOT SERVICED SEPARATELY, Plug
25	NSS	1	NOT SERVICED SEPARATELY, Cap
26	237-6010	2	O-RING, 10-1, 90 Duro, .755" ID x .097" Thk,
27	G108727	1	BACK-UP RING,
	86992392	1	PISTON, Inc. 30 - 32
30	NSS	1	NOT SERVICED SEPARATELY, Washer
31	NSS	1	NOT SERVICED SEPARATELY, Piston
32	NSS	1	NOT SERVICED SEPARATELY, Ring, Retaining
35	86625138	1	PLUG, Hex Soc, 7/8"-14 ORB, 7/8 Or, Inc. 36
36	237-6010	1	O-RING, 10-1, 90 Duro, .755" ID x .097" Thk,
37	238-5120	2	O-RING, -120, 70 Duro, .987" ID x .103" Thk,
38	436518A1	2	WASHER,
	437790A3	1	SPOOL, Inc. 39 - 41, Order 87416820 Spool and 87411129 Spring, BSN AJB0302496
	87416820	1	SPOOL, Inc. 39 - 41, ASN AJB0302496
39	NSS	1	NOT SERVICED SEPARATELY, Spool
40	86632547	1	PLUG, Hex Soc, 5/16"-24 ORB, 5/16 Or, Inc. 41
41	237-6002	1	O-RING, 2-1, .239" ID x .064" Thk,
42	301969A2	2	SPRING, , BSN AJB0302496
43	301970A1	1	SPRING, , BSN AJB0302496
	367421A3	2	VALVE, Inc. 48 - 56
48	NSS	1	NOT SERVICED SEPARATELY, Body
49	278506A2	1	VALVE, SOLENOID, Inc. 50 - 52
	372228A1	1	SEAL, Inc. 50 - 52
50	319721A1	1	O-RING, 15,3 ID x 2,4
51	319722A1	1	O-RING, 10,3 ID x 2,4
52	319723A1	1	O-RING, 8,3 ID x 2,4
53	892-11004	2	WASHER, LOCK, M4, M4

MX285 CASE IH MAGNUM TRACTOR (NORTH AMERICA)

08-19 REMOTE HYDRAULIC CONTROL VALVE

ссылка	Номер детали	Кол-во	Описание
54	864-4016	2	SCREW, Hex Soc Hd, M4 x 16, 8.8, M4 x 16; 8.8
55	238-5011	1	O-RING, -011, 70 Duro, .301" ID x .070" Thk,
56	238-5012	1	O-RING, -012, 70 Duro, .364" ID x .070" Thk,
	86994122	1	POPPET, Inc. 57, 58
57	446404A1	1	PLUG,
58	446405A1	1	SPRING,
60	436854A1	1	SPRING,
61	321689A1	1	SPRING, , BSN AJB0302496
62	864-6075	2	SCREW, Hex Soc Hd, M6 x 75, 8.8, M6 x 75; 8.8
63	238-6116	2	O-RING, -116, 90 Duro, .737" ID x .103" Thk,
64	87408510	1	PLATE,
65	628-8025	3	BOLT, Hex, M8 x 25, 10.9, Full Thd, M8 x 25; 10.9
66	87411129	2	SPRING, , ASN AJB0302496

MX285 CASE IH MAGNUM TRACTOR (NORTH AMERICA)

08-20 HITCH VALVE ASSEMBLY - BSN AJB0362561

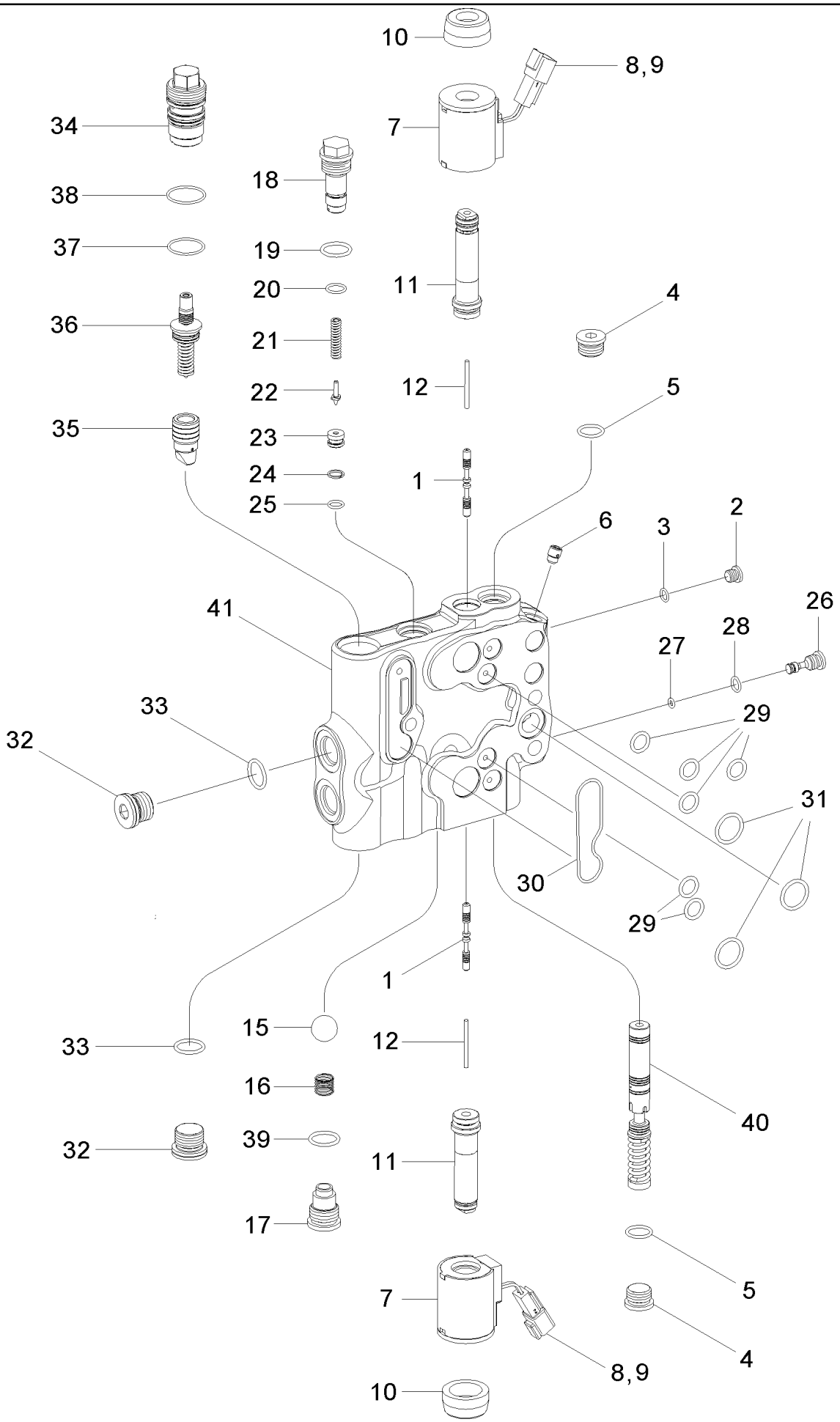

MX285 CASE IH MAGNUM TRACTOR (NORTH AMERICA)

08-20 HITCH VALVE ASSEMBLY - BSN AJB0362561

ссылка	Номер детали	Кол-во	Описание
	412509A2	1	VALVE, Hitch, Inc. 1 - 41, Order 412509A4 Valve
	412509A3	1	VALVE, Hitch, Inc. 1 - 41, BSN AJB0303604
	412509A4	1	VALVE, Hitch, Inc. 1 - 41, ASN AJB0303604
1	188104A1	2	SPOOL,
2	86529630	1	PLUG, Hex Soc, 3/8"-24 ORB, 3/8 Or, Inc.3
3	237-6003	1	O-RING, 3-1, .301" ID x .064" Thk,
4	71100209	2	PLUG, Hex Soc, 3/4"-16 ORB, 3/4 Or, Inc. 5
5	237-6008	1	O-RING, 8-1, 90 Duro, .644" ID x .087" Thk,
6	373758A1	1	VALVE,
	243254A1	2	KIT, Inc. 7 - 9
7	188105A1	1	SOLENOID,
8	225318C1	1	WEDGE,
9	225315C1	1	CONNECTOR, ELEC,
10	188106A1	2	NUT,
11	188117A1	2	TUBE,
12	188116A1	2	PIN,
15	511-10200	1	BALL, 20mm Dia,
	87423671	1	KIT, SPRING, Inc. 16, 17 and 39, Used with 412509A3 and 412509A4 Valves
16	188114A1	1	SPRING, , Used with 412509A2 Valve
16	NSS	1	NOT SERVICED SEPARATELY, , Used with 412509A3 and 412509A4 Valves
17	373760A1	1	PLUG, , Used with 412509A2 Valve
17	NSS	1	NOT SERVICED SEPARATELY, , Used with 412509A3 and 412509A4 Valves
	373756A1	1	KIT, Inc. 18 - 25
18	NSS	1	NOT SERVICED SEPARATELY, Plug, Relief
19	237-6010	1	O-RING, 10-1, 90 Duro, .755" ID x .097" Thk,
20	238-5014	1	O-RING, -014, 70 Duro, .489" ID x .070" Thk,
21	NSS	1	NOT SERVICED SEPARATELY, Spring
22	NSS	1	NOT SERVICED SEPARATELY, Poppet
23	NSS	1	NOT SERVICED SEPARATELY, Seat
24	NSS	1	NOT SERVICED SEPARATELY, Ring
25	238-6011	1	O-RING, -011, 90 Duro, .301" ID x .070" Thk,
26	373761A1	1	PLUG,
27	238-6008	1	O-RING, -008, 90 Duro, .176" ID x .070" Thk,
28	237-6004	1	O-RING, 4-1, 90 Duro, .351" ID x .072" Thk,
29	238-6112	6	O-RING, -112, 90 Duro, .487" ID x .103" Thk,
30	238-5142	1	O-RING, -142, 90 Duro, 2.362" ID x .103" Thk,
31	238-6117	3	O-RING, -117, 90 Duro, .799" ID x .103" Thk,
32	221579A1	2	PLUG, Hex Soc, M22 x 1.5, ORB, M22, Inc.33
33	637-63193	1	O-RING, Cl 6, 19.3MM ID x 2.2 Thk, 91,3 ID x 2,2
	243256A1	1	KIT, SERVICE, Inc. 34 - 38, BSN AJB0303604
	87430152	1	KIT, SERVICE, Inc. 34, 36 - 38, ASN AJB0303604
34	NSS	1	NOT SERVICED SEPARATELY, Tube
35	NSS	1	NOT SERVICED SEPARATELY, Poppet Valve
36	NSS	1	NOT SERVICED SEPARATELY, Stem, Servo
37	238-5022	1	O-RING, -022, 70 Duro, .989" ID x .070" Thk,

MX285 CASE IH MAGNUM TRACTOR (NORTH AMERICA)

08-20 HITCH VALVE ASSEMBLY - BSN AJB0362561

ссылка	Номер детали	Кол-во	Описание
38	238-5023	1	O-RING, -023, 70 Duro, 1.051" ID x .070" Thk,
39	237-6010	1	O-RING, 10-1, 90 Duro, .755" ID x .097" Thk,
40	NSS	1	NOT SERVICED SEPARATELY, Spool
41	NSS	1	NOT SERVICED SEPARATELY, Body
	373757A1	1	KIT, Seal, Inc. 3, 5, 19, 20, 24, 25, 27 - 31, 37, 38, 39

08-20A HITCH VALVE ASSEMBLY - ASN AJB0362562

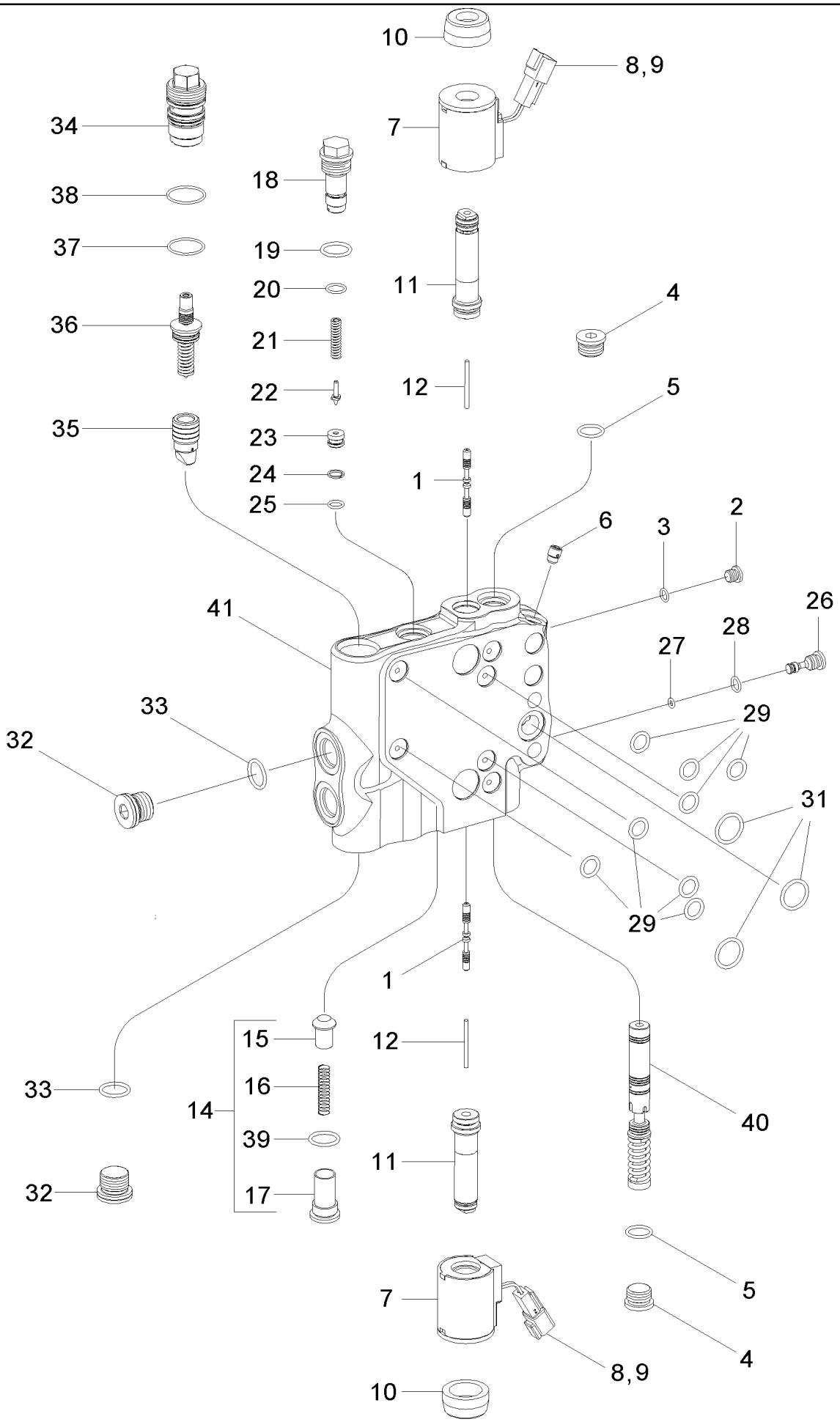

MX285 CASE IH MAGNUM TRACTOR (NORTH AMERICA)

08-20A HITCH VALVE ASSEMBLY - ASN AJB0362562

ссылка	Номер детали	Кол-во	Описание
	87371677	1	VALVE, Hitch, Inc. 1 - 41
1	188104A1	2	SPOOL,
2	86529630	1	PLUG, Hex Soc, 3/8"-24 ORB, 3/8 Or, Inc.3
3	237-6003	1	O-RING, 3-1, .301" ID x .064" Thk,
4	71100209	2	PLUG, Hex Soc, 3/4"-16 ORB, 3/4 Or, Inc. 5
5	237-6008	1	O-RING, 8-1, 90 Duro, .644" ID x .087" Thk,
6	373758A1	1	VALVE,
	243254A1	2	KIT, Inc. 7 - 9
7	188105A1	1	SOLENOID,
8	225318C1	1	WEDGE,
9	225315C1	1	CONNECTOR, ELEC,
10	188106A1	2	NUT,
11	188117A1	2	TUBE,
12	188116A1	2	PIN,
14	87373591	1	KIT, Inc. 15, 16, 17 and 39
15	NSS	1	NOT SERVICED SEPARATELY, Poppet
16	NSS	1	NOT SERVICED SEPARATELY, Spring
17	NSS	1	NOT SERVICED SEPARATELY, Plug
	373756A1	1	KIT, Inc. 18 - 25
18	NSS	1	NOT SERVICED SEPARATELY, Plug, Relief
19	237-6010	1	O-RING, 10-1, 90 Duro, .755" ID x .097" Thk,
20	238-5014	1	O-RING, -014, 70 Duro, .489" ID x .070" Thk,
21	NSS	1	NOT SERVICED SEPARATELY, Spring
22	NSS	1	NOT SERVICED SEPARATELY, Poppet
23	NSS	1	NOT SERVICED SEPARATELY, Seat
24	NSS	1	NOT SERVICED SEPARATELY, Ring
25	238-6011	1	O-RING, -011, 90 Duro, .301" ID x .070" Thk,
26	373761A1	1	PLUG,
27	238-6008	1	O-RING, -008, 90 Duro, .176" ID x .070" Thk,
28	237-6004	1	O-RING, 4-1, 90 Duro, .351" ID x .072" Thk,
29	238-6112	8	O-RING, -112, 90 Duro, .487" ID x .103" Thk,
31	238-6117	3	O-RING, -117, 90 Duro, .799" ID x .103" Thk,
32	221579A1	2	PLUG, Hex Soc, M22 x 1.5, ORB, M22, Inc.33
33	637-63193	1	O-RING, Cl 6, 19.3MM ID x 2.2 Thk,
	87430152	1	KIT, SERVICE, Inc. 34, 36 - 38
34	NSS	1	NOT SERVICED SEPARATELY, Tube
35	NSS	1	NOT SERVICED SEPARATELY, Poppet Valve
36	NSS	1	NOT SERVICED SEPARATELY, Stem, Servo
37	238-5022	1	O-RING, -022, 70 Duro, .989" ID x .070" Thk,
38	238-5023	1	O-RING, -023, 70 Duro, 1.051" ID x .070" Thk,
39	237-6010	1	O-RING, 10-1, 90 Duro, .755" ID x .097" Thk,
40	NSS	1	NOT SERVICED SEPARATELY, Spool
41	NSS	1	NOT SERVICED SEPARATELY, Body
	373757A1	1	KIT, Seal, Inc. 3, 5, 19, 20, 24, 25, 27 - 31, 37, 38, 39

MX285 CASE IH MAGNUM TRACTOR (NORTH AMERICA)

08-21 REMOTE HYDRAULIC COUPLING MOUNTING

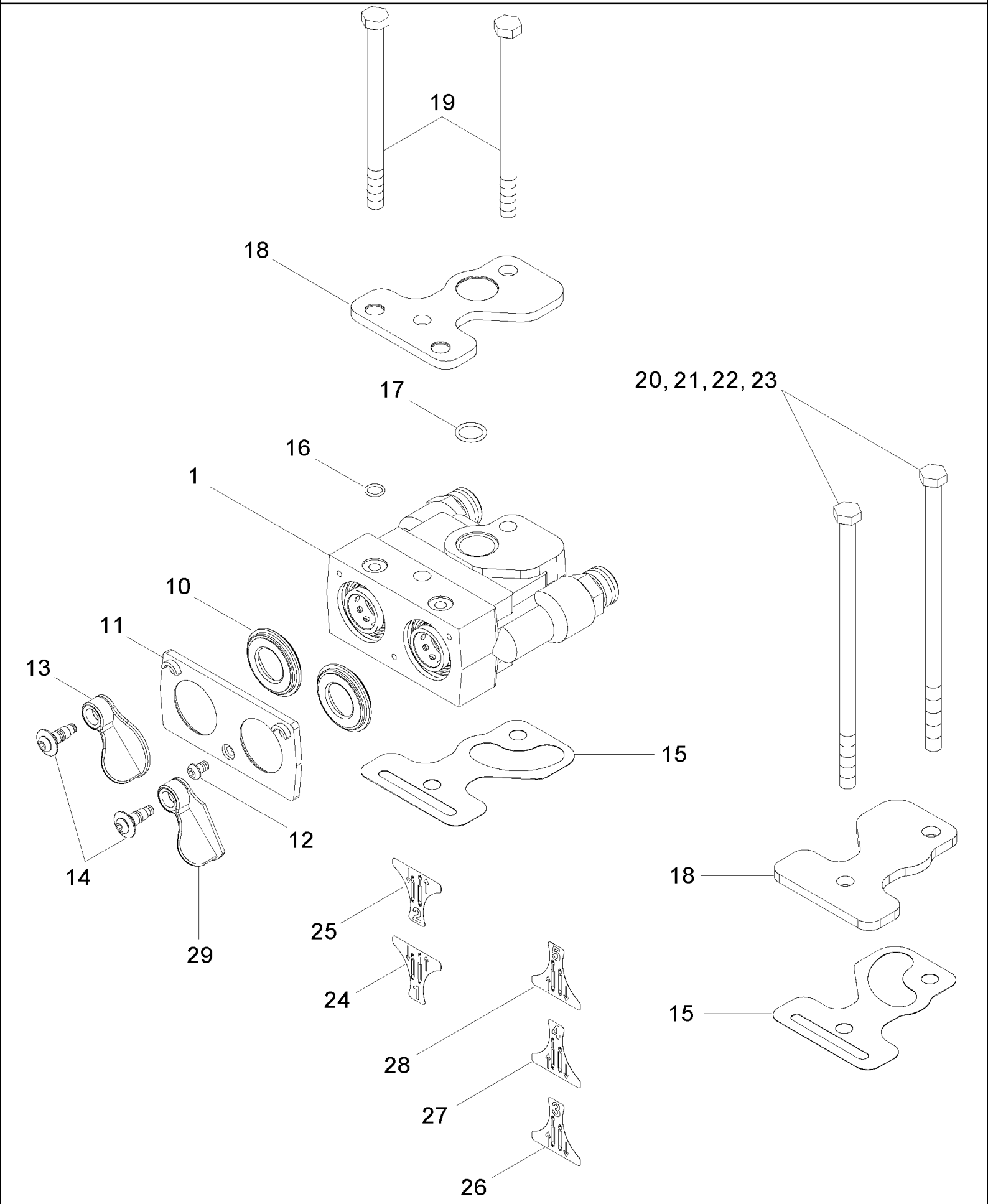

MX285 CASE IH MAGNUM TRACTOR (NORTH AMERICA)

08-21 REMOTE HYDRAULIC COUPLING MOUNTING

сылка	Номер детали	Кол-во	Описание
1	275182A2	AR	COUPLING, PUSH-PULL, , See Figure 08-22
10	240969A1	AR	SEAL,
11	240971A2	AR	PLATE,
12	240970A2	AR	SCREW,
13	240974A2	AR	COVER, DOOR,
14	240973A2	AR	SCREW,
15	253660A2	2	GASKET,
16	238-6014	AR	O-RING, -014, 90 Duro, .489" ID x .070" Thk,
17	238-6021	AR	O-RING, -021, 90 Duro, .926" ID x .070" Thk,
18	258671A2	2	PLATE,
19	814-10140	2	BOLT, Hex, M10 x 140, 8.8,
21	814-10085	2	BOLT, Hex, M10 x 85, 8.8, M10 x 85, 3 Circuits
22	814-10140	2	BOLT, Hex, M10 x 140, 8.8, 4 Circuits
23	814-10205	2	BOLT, Hex, M10 x 205, 8.8, M10 x 205, 5 Circuits
24	284327A1	1	DECAL, Coupler 1
25	284328A1	1	DECAL, Coupler 2
26	284329A1	1	DECAL, Coupler 3
27	284330A1	1	DECAL, Coupler 4
28	284331A1	1	DECAL, Coupler 5
29	387611A1	AR	DUST CAP,

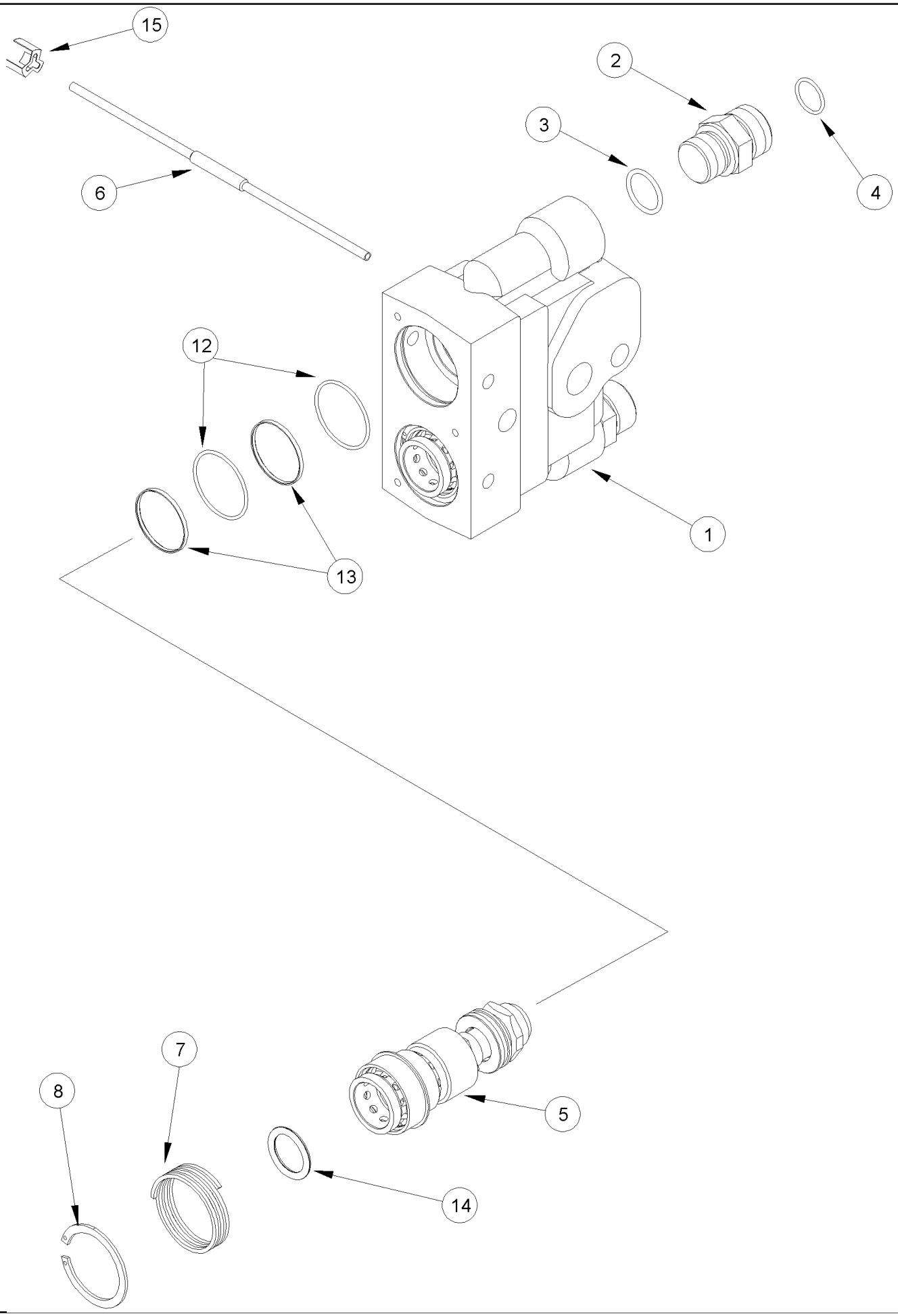
15
2
3
4
6
12
1
13
7
8
5
14

MX285 CASE IH MAGNUM TRACTOR (NORTH AMERICA)

08-22 REMOTE HYDRAULIC COUPLINGS

сылка	Номер детали	Кол-во	Описание
	275182A2	AR	COUPLING, PUSH-PULL, Inc. 1 - 14
1	NSS	1	NOT SERVICED SEPARATELY, Body
2	700-103	2	CONNECTOR, HYD., 1"-14 ORFS x M22 x 1.5 ORB, 1 fc sl x 22 Or, Inc. 3, 4
3	637-63193	1	O-RING, Cl 6, 19.3MM ID x 2.2 Thk, 19,3 ID x 2,2
4	238-6016	1	O-RING, -016, 90 Duro, .614" ID x .070" Thk,
5	321623A1	2	CARTRIDGE,
6	93329C2	1	SPRING,
7	93330C1	2	SPRING, VALVE,
8	100-28162	2	RING, SNAP, 1.625", Int, #162,
	345193A1	1	KIT, SEALS, Inc. 12 - 14
12	238-5027	4	O-RING, -027, 70 Duro, 1.301" ID x .070" Thk,
13	93332C1	4	SEAL ASSY.,
14	345192A1	2	SEAL,
15	361880A1	1	RETAINER,

MX285 CASE IH MAGNUM TRACTOR (NORTH AMERICA)

08-23 CYLINDER ASSEMBLY - HITCH (305002A2)

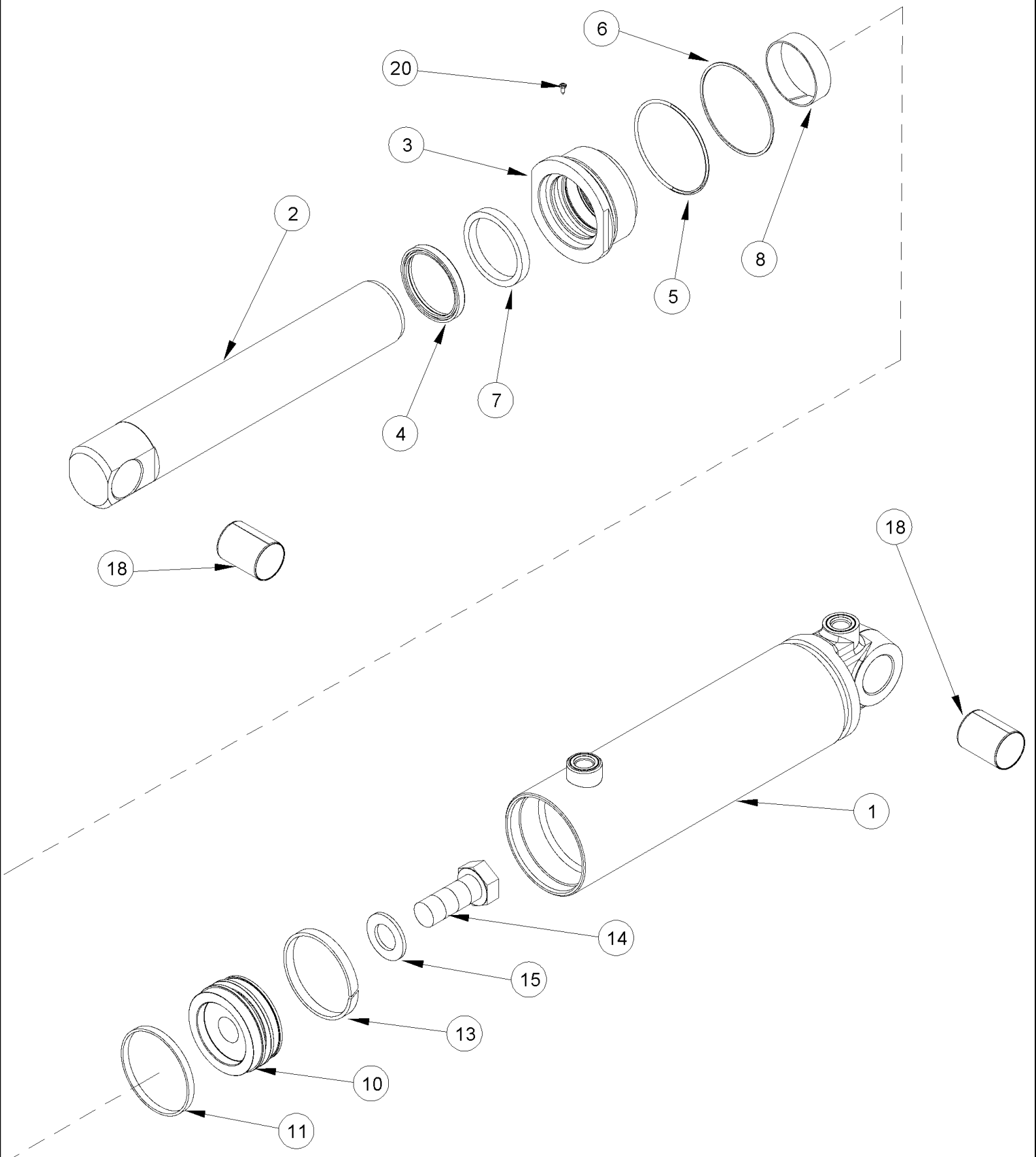

MX285 CASE IH MAGNUM TRACTOR (NORTH AMERICA)

08-23 CYLINDER ASSEMBLY - HITCH (305002A2)

сылка	Номер детали	Кол-во	Описание
	305002A2	1	CYLINDER, 89 ID x 260 mm strk, Part Number Stamped On Cylinder, Inc. 1 - 18
1	305003A2	1	CYLINDER,
2	303880A1	1	ROD, PISTON,
3	305008A1	1	CAP CYLINDER END,
4	D95146	1	WIPER,
5	238-5237	1	O-RING, -237, 70 Duro, 3.359" ID x .139" Thk,
6	G32126	1	RING,
7	G109228	1	SEAL,
8	258960A1	1	BEARING,
10	305010A1	1	JACK PISTON,
11	378919A1	1	SEAL,
13	G100711	1	RING, WEAR,
14	25974R1	1	BOLT, Hex, 1"-14 x 2 1/2", G8, Full Thd, 1 NF x 2-1/2; 8
15	G32303	1	WASHER,
17	276-2446	1	SCREW, SELF TAP, Hex Hd, #8 x 3/8", No. 8 x 3/8
18	237443A1	1	BUSHING,
	378922A1	1	KIT, Inc. 4, 5, 6, 7, 8, 11, 13

MX285 CASE IH MAGNUM TRACTOR (NORTH AMERICA)

08-24 CYLINDER ASSEMBLY - HITCH (278277A3)

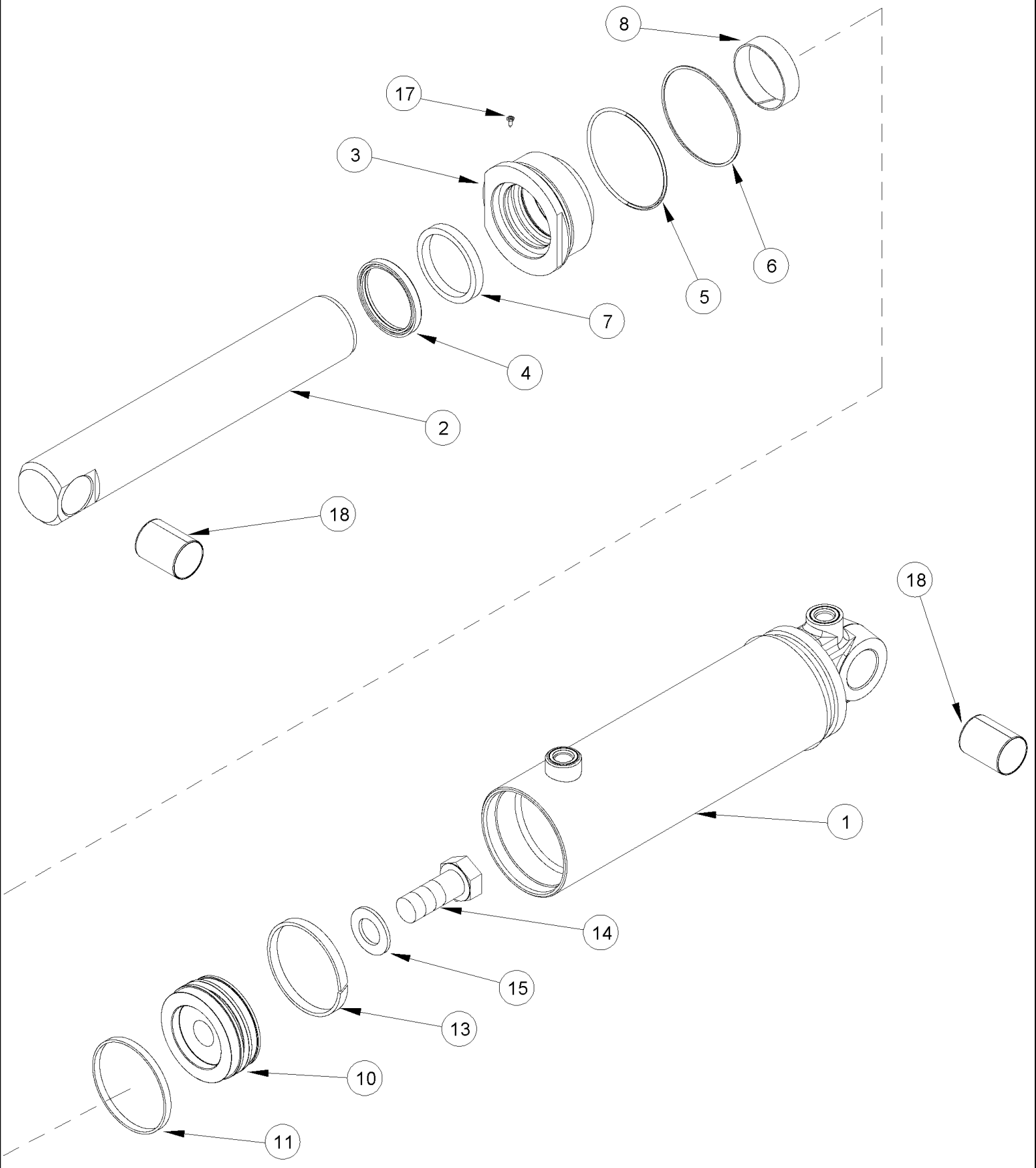

MX285 CASE IH MAGNUM TRACTOR (NORTH AMERICA)

08-24 CYLINDER ASSEMBLY - HITCH (278277A3)

ссылка	Номер детали	Кол-во	Описание
	278277A3	1	CYLINDER ASSY., 95 ID x 260 mm strk, Part Number Stamped On Cylinder, Inc. 1 - 18
1	303872A1	1	JACK BODY,
2	303880A1	1	ROD, PISTON,
3	303876A1	1	CAP CYLINDER END,
4	D95146	1	WIPER,
5	238-5239	1	O-RING, -239, 70 Duro, 3.609" ID x .139" Thk, 3-5/8 x 1/8
6	G109299	1	RING,
7	G109228	1	SEAL,
8	258960A1	1	BEARING,
10	278285A2	1	JACK PISTON,
11	190332A1	1	SEAL,
13	278331A1	1	RING, WEAR,
14	25974R1	1	BOLT, Hex, 1"-14 x 2 1/2", G8, Full Thd, 1 NF x 2-1/2; 8
15	G32303	1	WASHER,
17	276-2446	1	SCREW, SELF TAP, Hex Hd, #8 x 3/8", No. 8 x 3/8
18	237443A1	1	BUSHING,
	378712A1	1	KIT, Inc. 4, 5, 6, 7, 8, 11, 13

MX285 CASE IH MAGNUM TRACTOR (NORTH AMERICA)

08-25 CYLINDER ASSEMBLY - HITCH (278419A3)

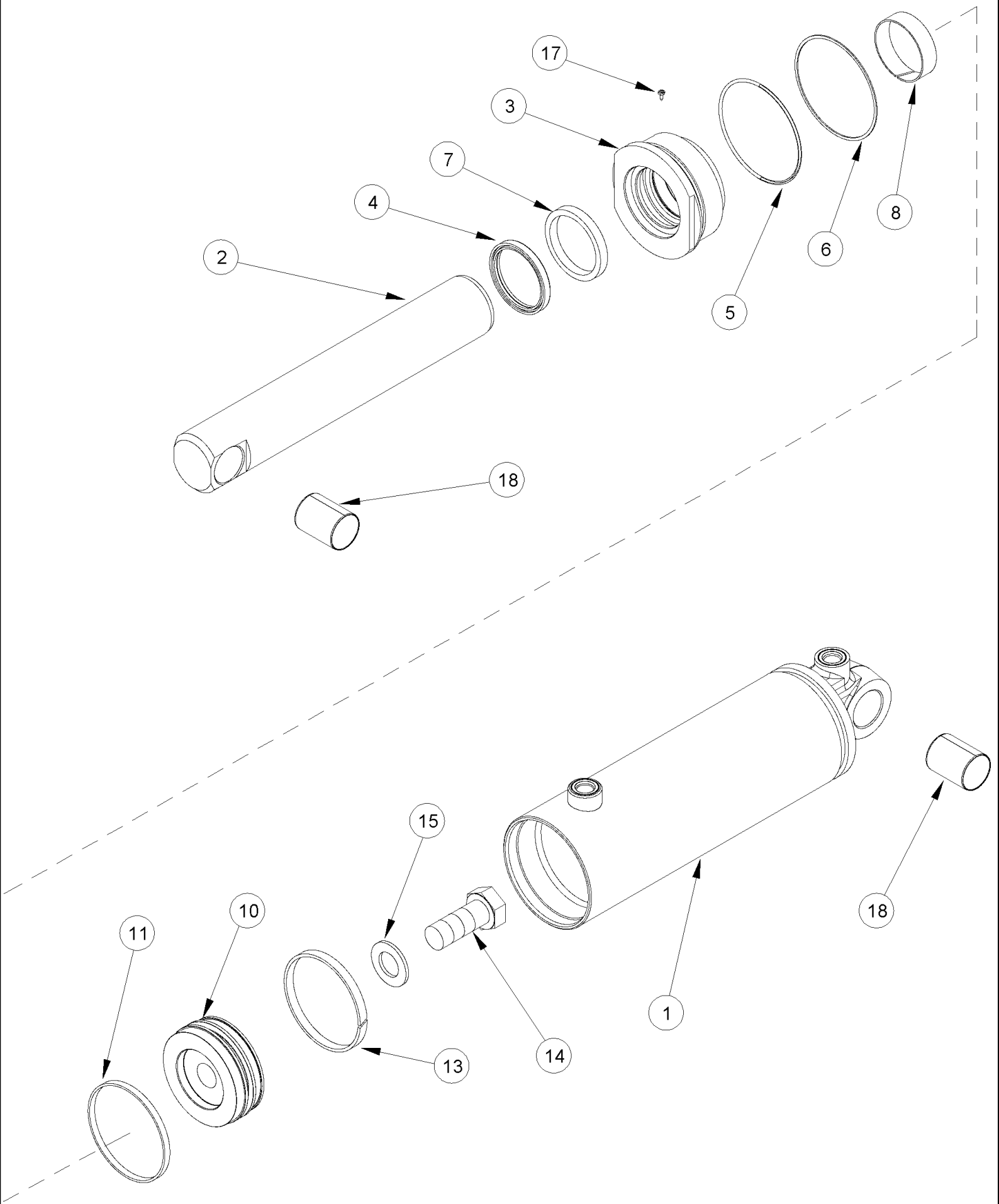

MX285 CASE IH MAGNUM TRACTOR (NORTH AMERICA)

08-25 CYLINDER ASSEMBLY - HITCH (278419A3)

ссылка	Номер детали	Кол-во	Описание
	278419A3	1	CYLINDER, 105 ID x 260 mm strk, Part Number Stamped On Cylinder, Inc. 1 - 18
1	303867A1	1	JACK BODY,
2	303880A1	1	ROD, PISTON,
3	303871A1	1	CAP CYLINDER END,
4	D95146	1	WIPER,
5	238-5241	1	O-RING, -241, 70 Duro, 3.859" ID x .139" Thk,
6	281408A1	1	SEAL,
7	G109228	1	SEAL,
8	258960A1	1	BEARING,
10	278426A2	1	JACK PISTON,
11	378717A1	1	SEAL,
13	281412A1	1	SEAL,
14	25974R1	1	BOLT, Hex, 1"-14 x 2 1/2", G8, Full Thd, 1 NF x 2-1/2; 8
15	G32303	1	WASHER,
17	276-2446	1	SCREW, SELF TAP, Hex Hd, #8 x 3/8", No. 8 x 3/8
18	237443A1	1	BUSHING,
	378711A1	1	KIT, Inc. 4, 5, 6, 7, 8, 11, 13

08-26 POWER BEYOND VALVE ASSEMBLY

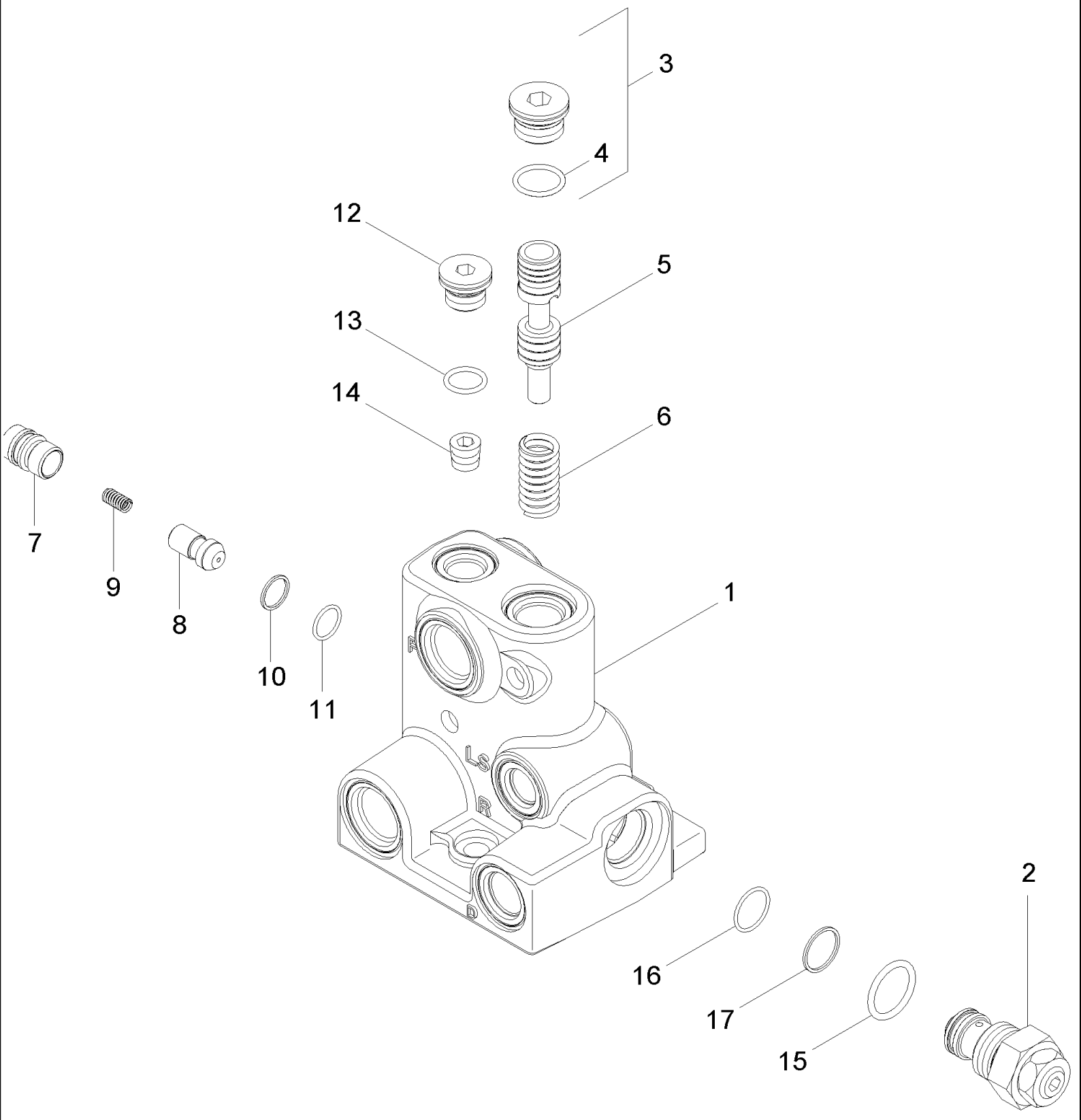

MX285 CASE IH MAGNUM TRACTOR (NORTH AMERICA)

08-26 POWER BEYOND VALVE ASSEMBLY

ссылка	Номер детали	Кол-во	Описание
	86989384	1	VALVE, HYDRAULIC, Power Beyond, Inc. 1 - 17, BSN AJB0304849
	87442165	1	VALVE, HYDRAULIC, Power Beyond, Inc. 1 - 17, ASN AJB0304849
1	NSS	1	NOT SERVICED SEPARATELY, Body
2	315796A1	1	VALVE, PRESSURE RELIEF, Inc. 15 - 17
3	221579A1	1	PLUG, Hex Soc, M22 x 1.5, ORB, M22, Inc. 4
4	637-63193	1	O-RING, Cl 6, 19.3MM ID x 2.2 Thk, 19,3 ID x 2,2
5	86990388	1	SPOOL,
6	87441634	1	SPRING,
	1542563C1	1	VALVE, CHECK, Inc. 7 - 11
7	NSS	1	NOT SERVICED SEPARATELY, Plug
8	1543329C1	1	POPPET, VALVE,
9	NSS	1	NOT SERVICED SEPARATELY, Spring
10	238-6015	1	O-RING, -015, 90 Duro, .551" ID x .070" Thk,
11	G108723	1	RING, Back Up
12	221578A1	1	PLUG, Hex Soc, M18 x 1.5, ORB, M18, Inc. 13
13	637-63153	1	O-RING, Cl 6, 15.3MM ID x 2.2 Thk, 15,3 ID x 2,2
14	217-432	1	PLUG, Hex Soc, 1/4"-18,
15	237-6012	1	O-RING, 12-1, 90 Duro, .924 ID x .118" Thk,
16	238-6018	1	O-RING, -018, 90 Duro, .739" ID x .070" Thk,
17	G35540	1	RING, Back-Up

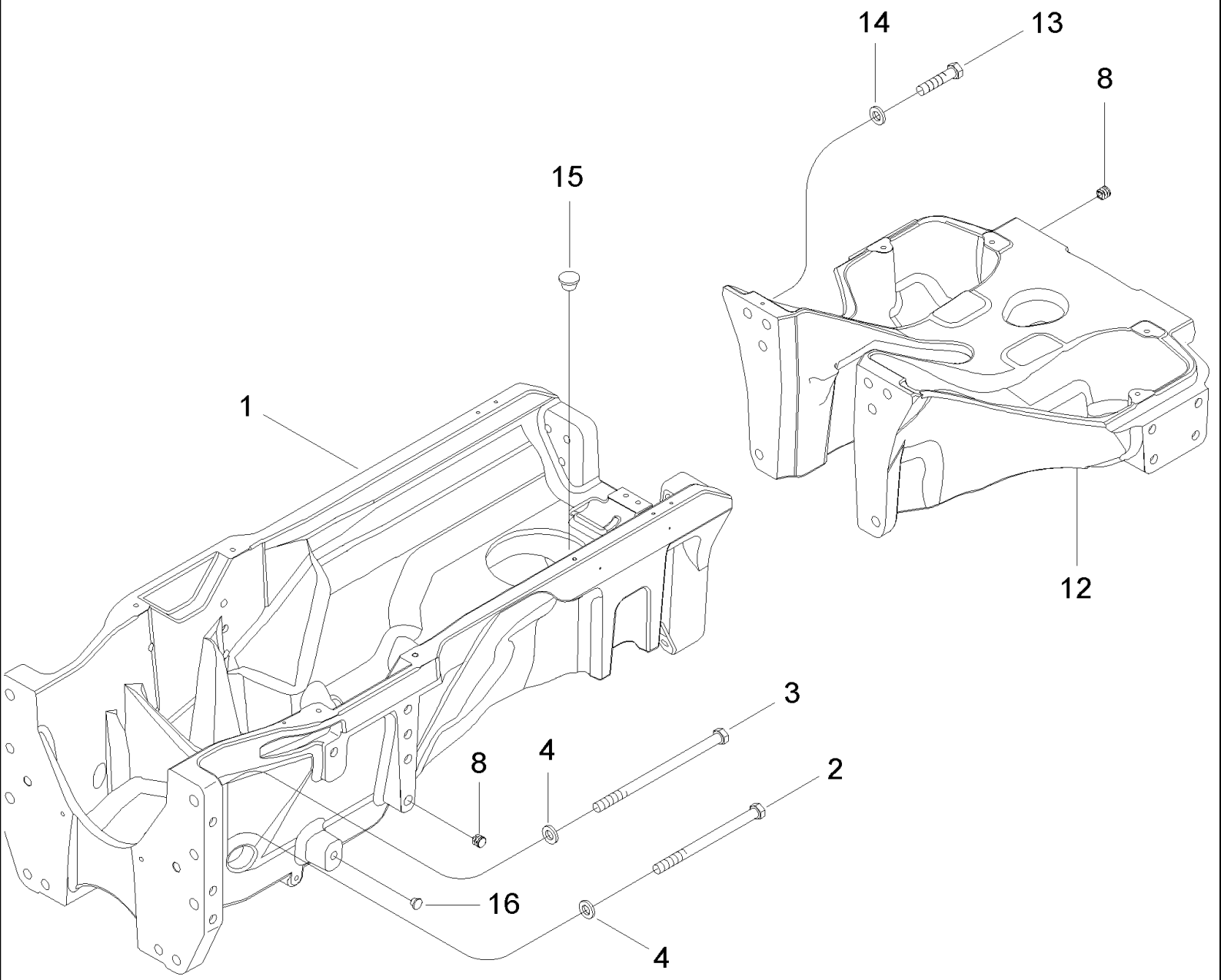
14
13
8
15
1
12
3
8
4
2
16
4

MX285 CASE IH MAGNUM TRACTOR (NORTH AMERICA)

09-01 FRONT FRAME

ссылка	Номер детали	Кол-во	Описание
1	86993157	1	FRAME,
2	253636A1	4	SCREW, M20 x 275; 10,9
3	249541A1	6	SCREW, M20 x 340; 10,9
4	396-31081	10	WASHER, 13/16" x 1 1/2" x .219", HDN, 13/16 x 1-1/2 x 7/32
8	305138A1	30	PLUG,
12	429830A1	1	FRAME, Extension
13	258504A1	8	SCREW, M20 x 90; 10,9
14	396-31081	8	WASHER, 13/16" x 1 1/2" x .219", HDN, 13/16 x 1-1/2 x 7/32
15	339158A1	2	PLUG,
16	128209A1	2	PLUG,

MX285 CASE IH MAGNUM TRACTOR (NORTH AMERICA)

09-02 FRONT WEIGHTS - 45 KG (100 LB)

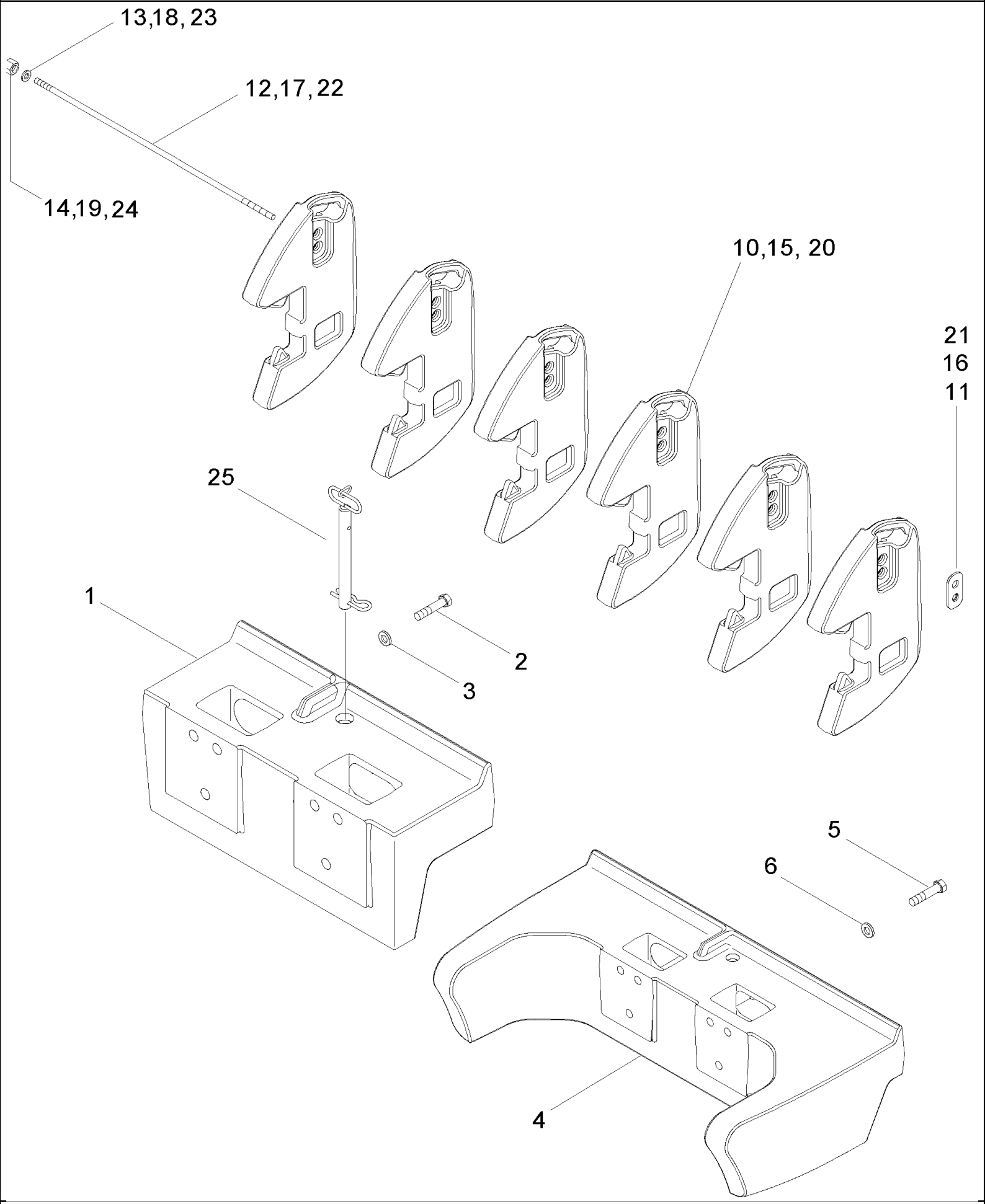

MX285 CASE IH MAGNUM TRACTOR (NORTH AMERICA)

09-02 FRONT WEIGHTS - 45 KG (100 LB)

ссылка	Номер детали	Кол-во	Описание
	435971A1	1	WEIGHT, Small Support, Inc. 1 - 3, Order From Machinery Price List
1	405844A2	1	BRACKET, Small
2	258504A1	6	SCREW, M20 x 90; 10,9
3	396-31081	6	WASHER, 13/16" x 1 1/2" x .219", HDN, 13/16 x 1-1/2 x 7/32
	435970A1	1	WEIGHT, Large Support, Inc. 4 - 6, Order From Machinery Price List
4	405845A2	1	BRACKET, Large
5	258504A1	6	SCREW, M20 x 90; 10,9
6	396-31081	6	WASHER, 13/16" x 1 1/2" x .219", HDN, 13/16 x 1-1/2 x 7/32
	435972A1	1	ATTACHMENT, 270 Kg (600 lb), Inc. 10 - 14, Order From Machinery Price List
10	405846A3	6	WEIGHT, , Order From Machinery Price List
11	229483A2	1	RETAINER,
12	337880A1	1	THREADED ROD,
13	896-16016	1	WASHER, M16 x 34.5 x 5, HT, 17,5 x 34 x 5 mm
14	829-1416	1	NUT, M16, Cl 10, M16; 10
	435973A1	1	ATTACHMENT, 454 Kg (1000 lb), Inc. 15 - 19, Order From Machinery Price List
15	405846A3	10	WEIGHT, , Order From Machinery Price List
16	229483A2	1	RETAINER,
17	324475A1	1	TRUSS ROD,
18	896-16016	1	WASHER, M16 x 34.5 x 5, HT, 17,5 x 34 x 5 mm
19	829-1416	1	NUT, M16, Cl 10, M16; 10
	435974A1	1	SET, 815 Kg (1800 lb), Inc. 20 - 24, Order From Machinery Price List
20	405846A3	18	WEIGHT, , Order From Machinery Price List
21	229483A2	1	RETAINER,
22	324474A1	1	TRUSS ROD,
23	896-16016	1	WASHER, M16 x 34.5 x 5, HT, 17,5 x 34 x 5 mm
24	829-1416	1	NUT, M16, Cl 10, M16; 10
25	297750A1	1	PIN,

MX285 CASE IH MAGNUM TRACTOR (NORTH AMERICA)

09-03 FRONT WEIGHTS - 450 KG (1000 LB)

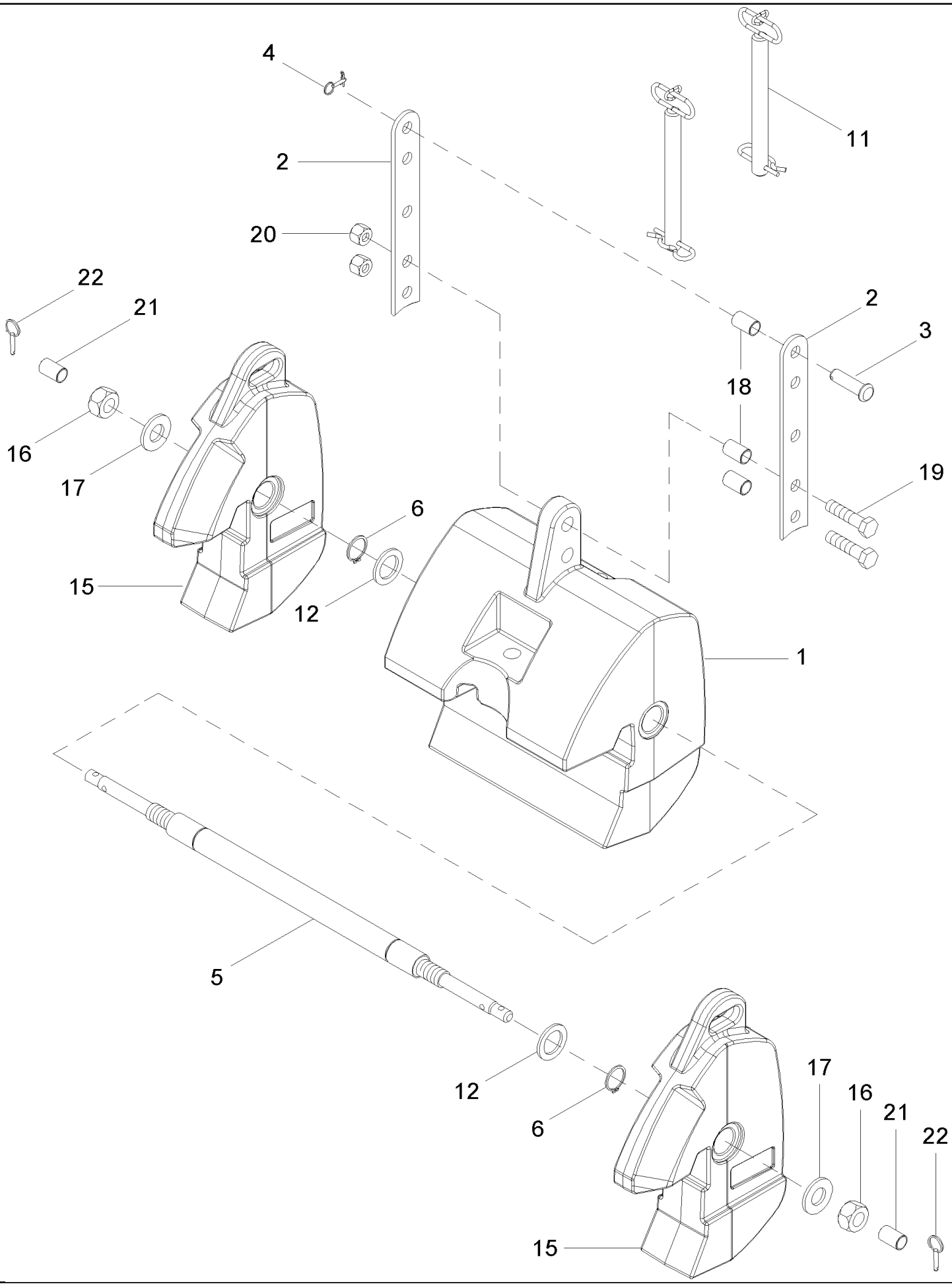

MX285 CASE IH MAGNUM TRACTOR (NORTH AMERICA)

09-03 FRONT WEIGHTS - 450 KG (1000 LB)

ссылка	Номер детали	Кол-во	Описание
	435975A1	1	KIT, 454 Kg (1000 lb), Inc. 1 - 12, 18 - 22, Order From Machinery Price List
	435976A1	1	KIT, 682 Kg (1500 lb), Inc. 1 - 22, Order From Machinery Price List
1	405847A2	1	WEIGHT, 454 Kg (1000 lb), Order From Machinery Price List
2	407253A1	2	BRACKET,
3	810751C1	1	PIN, 1 x 3-1/2 in
4	357476A1	1	PIN, SPLIT (COTTER),
5	359436A2	1	ROD, MOUNTING,
6	800-4550	2	RING, SNAP, M50, Ext, Hvy, No. 50
11	297750A2	1	PIN,
12	358352A1	2	WASHER,
15	405848A1	2	WEIGHT, 113 Kg (250 lb), Order From Machinery Price List
16	829-1436	2	NUT, M36, Cl 10, M36
17	896-16036	2	WASHER, M39 x 78.5 x 7, HT, 39 x 78 x 7 mm
18	398406R1	3	BUSHING,
19	827-24100	2	BOLT, Hex, M24 x 100, 10.9, M24 x 100; 10.9
20	832-10424	2	NUT, LOCK, M24 x 3, Cl 8, M24; 8
21	392004R1	2	SPACER,
22	378704A1	2	PIN,

MX285 CASE IH MAGNUM TRACTOR (NORTH AMERICA)

09-04 FRONT HITCH

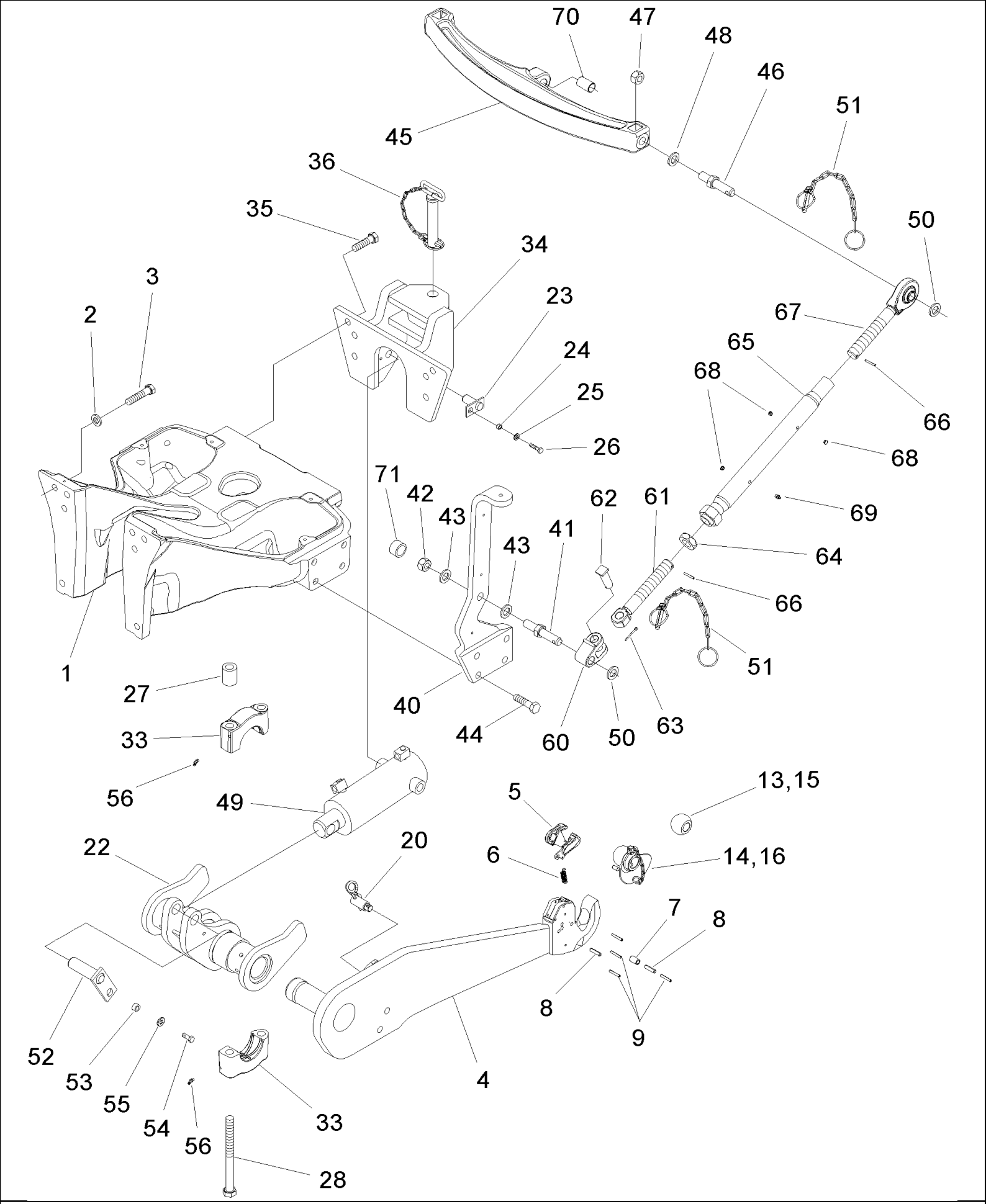

MX285 CASE IH MAGNUM TRACTOR (NORTH AMERICA)

09-04 FRONT HITCH

ссылка	Номер детали	Кол-во	Описание
1	429830A1	1	FRAME,
2	396-31081	8	WASHER, 13/16" x 1 1/2" x .219", HDN, 13/16 x 1-1/2 x 7/32
3	258504A1	8	SCREW, M20 x 90; 10,9
	377916A2	1	LINK, LIFT, Right Hand, Shown, Inc. 4 - 9
	377915A2	1	LINK, LIFT, Left Hand, Inc. 4 - 9
4	NSS	1	NOT SERVICED SEPARATELY, Link
5	370030A1	1	LATCH,
6	357749A1	1	SPRING,
7	359049A1	1	PIN, LARGE, 5 x 15 mm
	370217A1	1	PIN, SPLIT (COTTER), Inc. 8, 9
8	738-51040	2	PIN, M10 x 40, Slotted, 10 x 40 mm
9	838-3640	4	PIN, M6 x 40, Coiled, 6 x 40 mm
13	321081A1	2	BALL, 28.4 mm
14	132123A1	2	BALL, 28.4 mm
15	359189A2	2	BALL JOINT, 37.5 mm
16	381642A1	2	BALL, 37.5 mm
20	337589A1	2	PIN, HITCH,
22	309721A4	1	ROCKSHAFT,
23	349940A1	2	PIN,
24	D95748	2	SPACER,
25	896-11010	2	WASHER, M10 x 21.5 x 2.5, HT, 11 x 21 x 2,5 mm
26	627-10040	2	SCREW, Hex, M10 x 40, 10.9, Full Thd, M10 x 40; 10.9
27	355763A2	4	SPACER,
28	827-24270	4	BOLT, Hex, M24 x 270, 10.9, M24 x 270; 10.9
33	1533227C1	4	SUPPORT,
34	351005A2	1	CLEVIS,
35	366870A1	6	SCREW,
36	1974215C3	1	PIN, HITCH,
40	356970A4	1	BRACKET, Right Hand, Shown, Inc. 41 - 43, 71
40	356969A4	1	BRACKET, Left Hand, Inc. 41 - 43, 71
41	372116A1	1	PIN,
42	829-1424	1	NUT, M24, Cl 10, M24; 10
43	896-11024	2	WASHER, M24 x 44.5 x 5, HT, 26 x 44 x 5 mm
44	366870A1	8	SCREW,
45	365221A3	1	LINK, UPPER, Inc. 46 - 48
46	356930A3	2	PIN,
47	829-1424	2	NUT, M24, Cl 10, M24; 10
48	896-11024	2	WASHER, M24 x 44.5 x 5, HT, 26 x 44 x 5 mm
49	348474A1	1	CYLINDER ASSY.,
50	896-11024	4	WASHER, M24 x 44.5 x 5, HT, 26 x 44 x 5 mm
51	373170A1	4	CHAIN (AGRICULTURE),
52	321367A3	1	PIN ASSY.,
53	321365A1	1	SPACER,
54	805-12030	1	BOLT, Hex, Lock, M12 x 30, Cl 10.9, M12 x 30; 10,9
55	896-15012	1	WASHER, M12 x 28.5 x 4, HT, 13,5 x 28 x 4 mm

MX285 CASE IH MAGNUM TRACTOR (NORTH AMERICA)

09-04 FRONT HITCH

ссылка	Номер детали	Кол-во	Описание
56	933801R91	4	NIPPLE, LUBE, 45є, M8 x 1,
60	1348049C1	1	PIVOT,
61	364377A1	1	THREADED ROD, Right Hand Threads
62	1348050C1	1	PIN, LARGE,
63	733-5040	2	PIN, SPLIT (COTTER), M5 x 40,
64	829-4436	1	NUT, Thin, M36 x 4, Cl 05, M36
65	364375A1	1	TURNBUCKLE,
66	838-3540	2	PIN, M5 x 40, Coiled, 5 x 40 mm
67	364427A1	1	THREADED ROD, Left Hand Threads
68	366505A1	3	PLUG,
69	1974039C1	1	FITTING,
70	398406R1	1	BUSHING,
71	373182A1	1	CAP,

MX285 CASE IH MAGNUM TRACTOR (NORTH AMERICA)

09-05 FENDERS - FRONT, NARROW

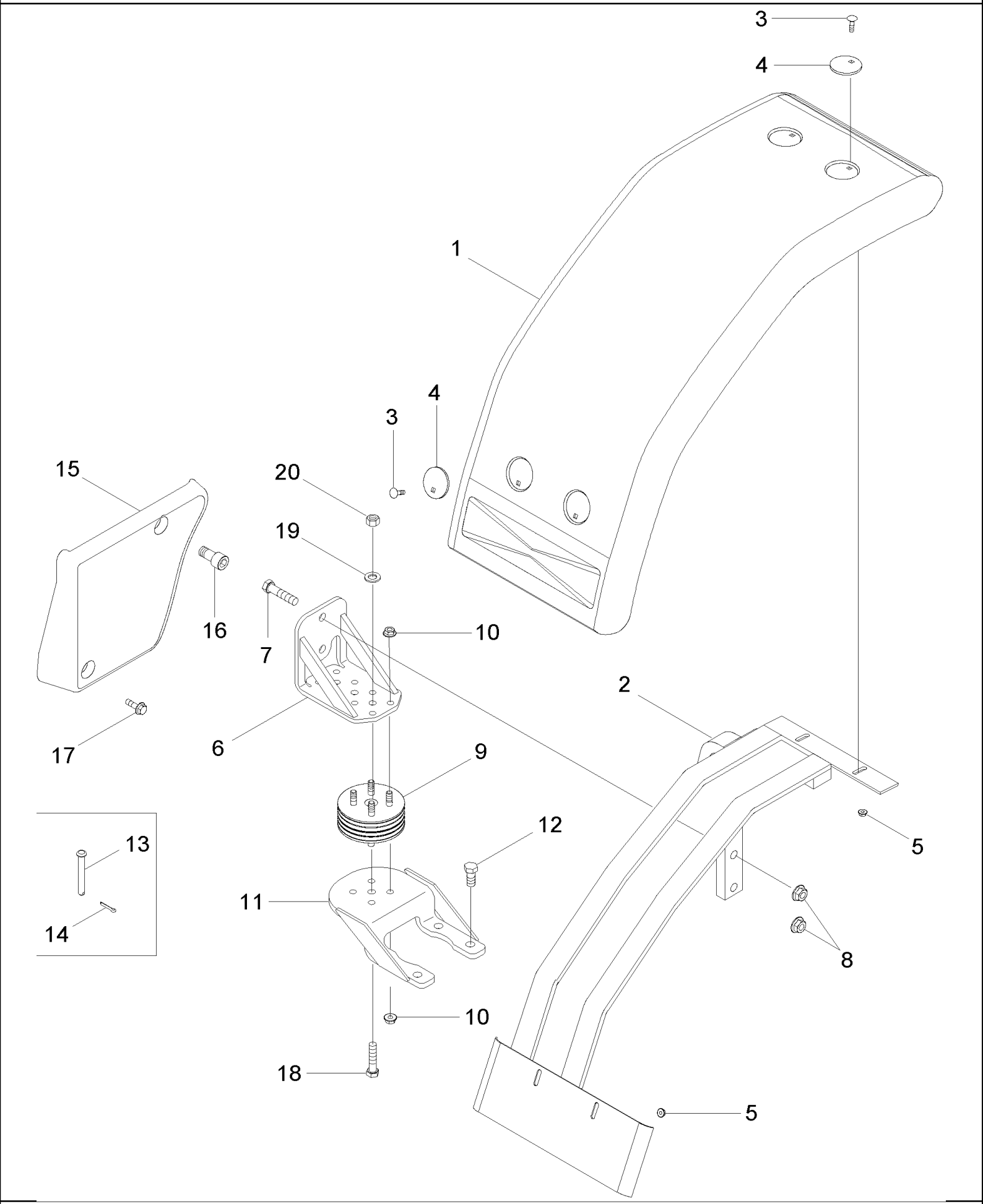

MX285 CASE IH MAGNUM TRACTOR (NORTH AMERICA)

09-05 FENDERS - FRONT, NARROW

ссылка	Номер детали	Кол-во	Описание
	301436A	1	KIT, Inc. 1 - 16, Order From Machinery Price List, BSN JAZ129994
	719686016	1	DIA KIT, ADDITIONAL PROD., Inc. 1 - 12, 15 - 20, Order From Machinery Price List, ASN JAZ129994
1	1340664C1	2	FENDER, Narrow
2	244759A2	1	SUPPORT ASSY., Right Hand, Shown
2	244760A2	1	SUPPORT ASSY., Left Hand
3	612-6	8	BOLT, CARRIAGE, Short NK, M8 x 30, Cl4.6, Full Thd, M8 x 30; 4,6
4	1340559C2	8	WASHER, 2-1/2
5	825-2408	8	NUT, M8 x 1.25, Flg, Cl 8,
6	257560A4	2	SUPPORT, , BSN JAZ129994
6	87427813	2	SUPPORT, , ASN JAZ129994
7	827-16070	4	BOLT, Hex, M16 x 70, 10.9, Hex, M16 x 70, 10.9
8	825-51416	4	NUT, Flg, M16, Serr, M16
9	226690A2	2	SHOCK ABSORBER,
10	9804279	16	NUT, M12 x 1.75, Flg, Cl 8,
11	426550A1	2	SUPPORT, , BSN JAZ129994
11	87427814	2	SUPPORT, , ASN JAZ129994
12	627-16040	8	BOLT, Hex, M16 x 40, 10.9, Hex, M16 x 40, 10.9
13	439-5860	2	PIN, HEADED, 1/2" x 3 3/4", 1/2 x 3-3/4, BSN JAZ129994
14	432-1216	2	PIN, SPLIT (COTTER), 3/16" x 1", 3/16" x 1", BSN JAZ129994
15	253850A1	1	BUMPER, Right Hand, Shown
15	255685A1	1	BUMPER, Left Hand
16	565-111	2	SCREW, Hex Soc Hd, M20 x 40, 8.8, M20 x 40
17	555-6	2	BOLT, Hex Flg, M12 x 25, 8.8, Full Thd, M12 x 25; 8,8
18	827-20100	2	BOLT, Hex, M20 x 100, 10.9, M20 x 100; 10.9, ASN JAZ129994
19	895-11020	2	WASHER, M20 x 37 x 3, 22 x 37 x 3 mm, ASN JAZ129994
20	832-10420	2	NUT, M20 x 2.5, Cl 8, M20, ASN JAZ129994

MX285 CASE IH MAGNUM TRACTOR (NORTH AMERICA)

09-06 FENDERS - FRONT, WIDE

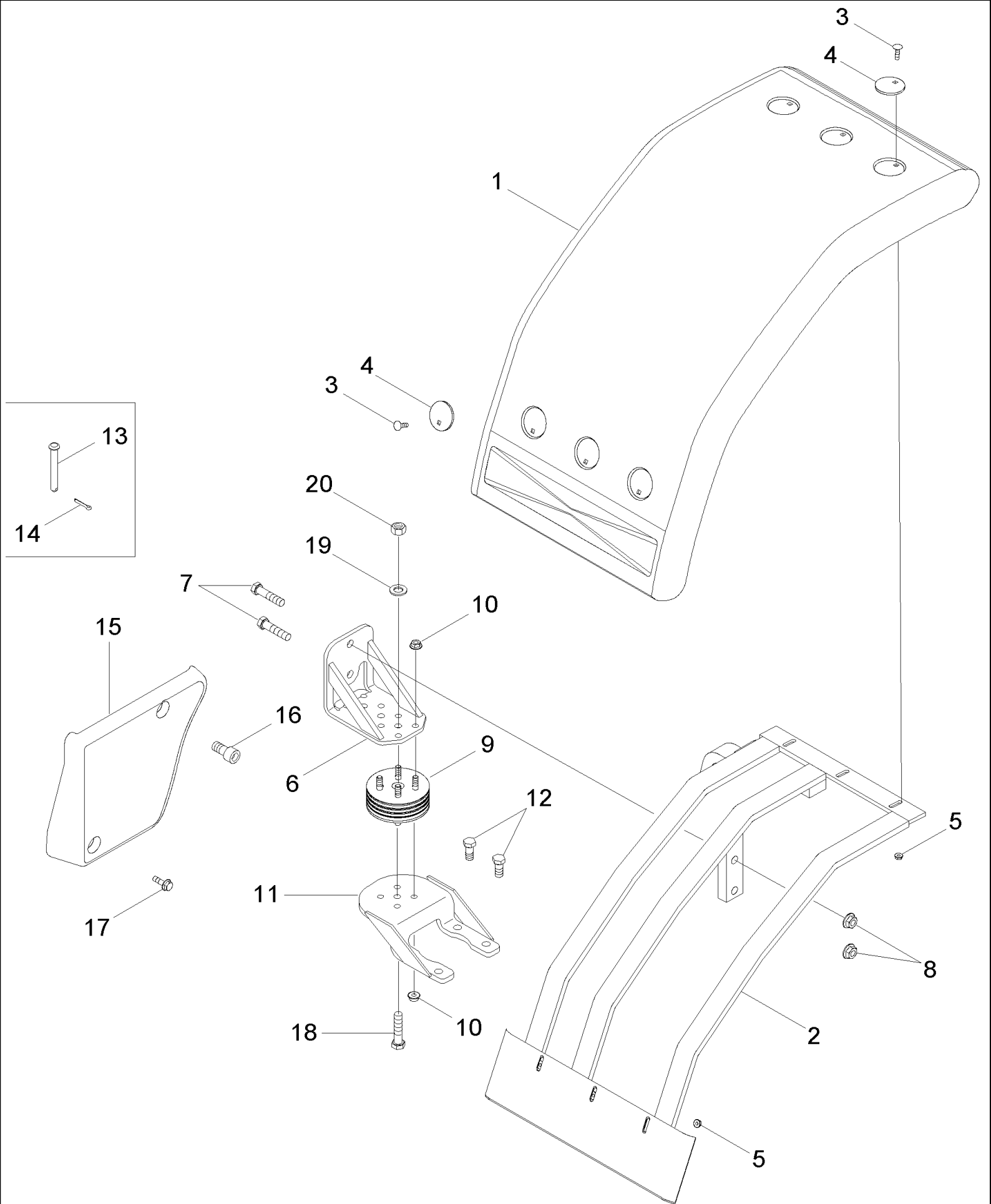

MX285 CASE IH MAGNUM TRACTOR (NORTH AMERICA)

09-06 FENDERS - FRONT, WIDE

ссылка	Номер детали	Кол-во	Описание
	301437A	1	KIT, Inc. 1 - 16, Order From Machinery Price List, BSN JAZ129994
	719687016	1	DIA KIT, ADDITIONAL PROD., Inc. 1 - 12, 15 - 20, Order From Machinery Price List, ASN JAZ129994
1	122212A1	2	FENDER, 600 mm, Wide
2	244031A3	1	SUPPORT ASSY., Right Hand, Shown
2	244030A3	1	SUPPORT ASSY., Left Hand
3	612-6	12	BOLT, CARRIAGE, Short NK, M8 x 30, Cl4.6, Full Thd, M8 x 30; 4,6
4	1340559C2	12	WASHER, 2-1/2
5	825-2408	12	NUT, M8 x 1.25, Flg, Cl 8,
6	257560A4	2	SUPPORT, , BSN JAZ129994
6	87427813	2	SUPPORT, , ASN JAZ129994
7	827-16070	4	BOLT, Hex, M16 x 70, 10.9, Hex, M16 x 70, 10.9
8	825-51416	4	NUT, Flg, M16, Serr, M16
9	226690A2	2	SHOCK ABSORBER,
10	9804279	16	NUT, M12 x 1.75, Flg, Cl 8,
11	426550A1	2	SUPPORT, , BSN JAZ129994
11	87427814	2	SUPPORT, , ASN JAZ129994
12	627-16040	8	BOLT, Hex, M16 x 40, 10.9, Hex, M16 x 40, 10.9
13	439-5860	2	PIN, HEADED, 1/2" x 3 3/4", 1/2 x 3-3/4, BSN JAZ129994
14	432-1216	2	PIN, SPLIT (COTTER), 3/16" x 1", 3/16" x 1", BSN JAZ129994
15	253850A1	1	BUMPER, Right Hand, Shown
15	255685A1	1	BUMPER, Left Hand
16	565-111	2	SCREW, Hex Soc Hd, M20 x 40, 8.8, M20 x 40
17	555-6	2	BOLT, Hex Flg, M12 x 25, 8.8, Full Thd, M12 x 25; 8,8
18	827-20100	2	BOLT, Hex, M20 x 100, 10.9, M20 x 100; 10.9, ASN JAZ129994
19	895-11020	2	WASHER, M20 x 37 x 3, 22 x 37 x 3 mm, ASN JAZ129994
20	832-10420	2	NUT, M20 x 2.5, Cl 8, M20, ASN JAZ129994

MX285 CASE IH MAGNUM TRACTOR (NORTH AMERICA)

09-07 FENDERS - REAR

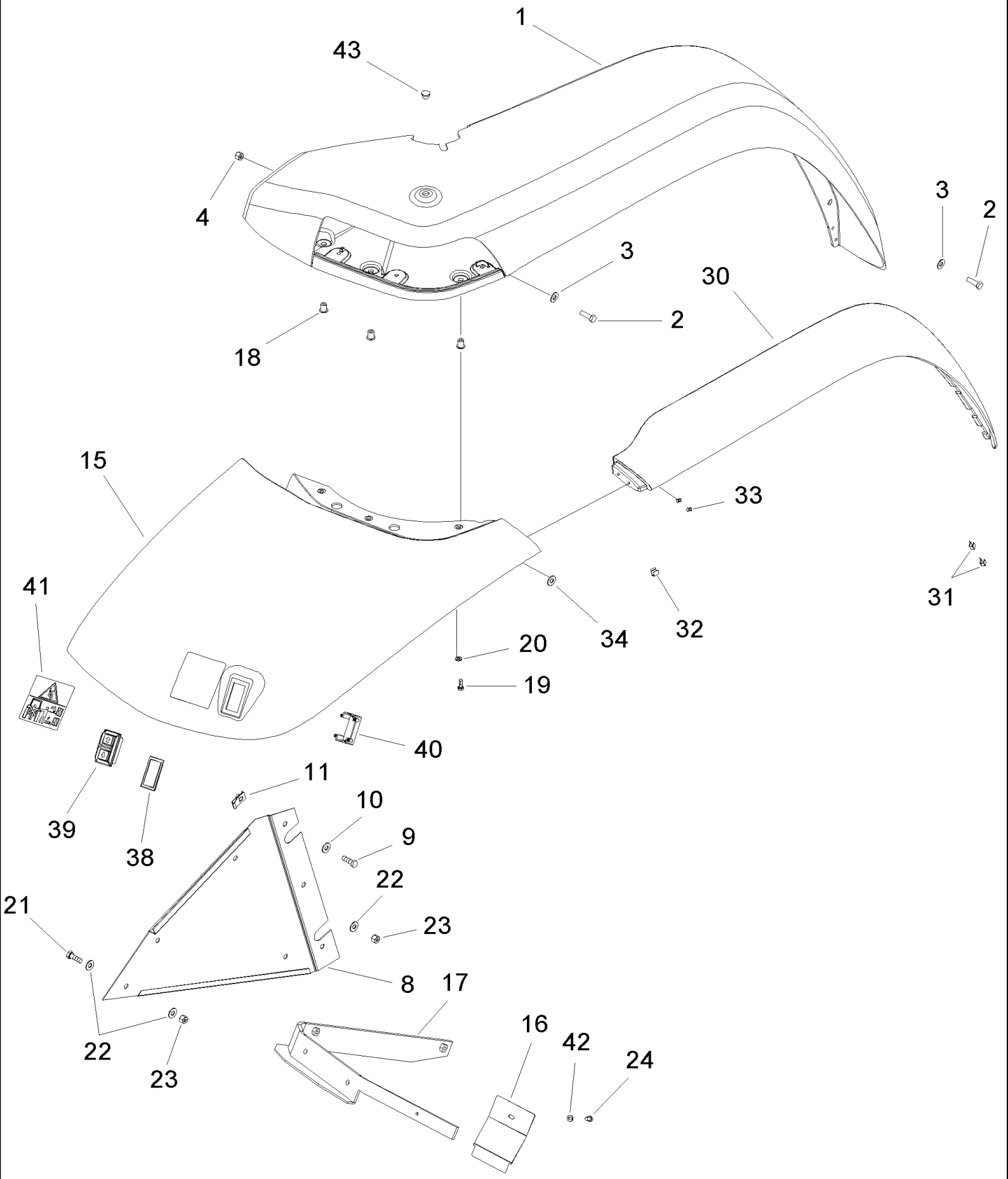

MX285 CASE IH MAGNUM TRACTOR (NORTH AMERICA)

09-07 FENDERS - REAR

ссылка	Номер детали	Кол-во	Описание
1	255130A3	1	DEFLECTOR, MUD, Right Hand, Shown
1	255129A4	1	DEFLECTOR, MUD, Left Hand
2	614-8025	14	BOLT, Hex, M8 x 25, 8.8,
3	895-15008	14	WASHER, M8 x 20 x 1.6, 9 x 20 x 1,6 mm
4	825-2408	2	NUT, M8 x 1.25, Flg, Cl 8,
8	295323A2	1	PLATE, LARGE, Right Hand, Shown
8	295322A2	1	PLATE, LARGE, Left Hand
9	614-8025	6	BOLT, Hex, M8 x 25, 8.8,
10	895-15008	6	WASHER, M8 x 20 x 1.6, 9 x 20 x 1,6 mm
11	833-41308	6	NUT, M8, U, M8
15	302364A2	1	EXTENSION, Right Hand, Shown
15	302366A2	1	EXTENSION, Left Hand
16	301720A2	2	COVER,
17	335705A1	1	SUPPORT, Right Hand, Shown
17	335704A1	1	SUPPORT, Left Hand
18	302342A1	6	INSERT,
19	806-6020	6	BOLT, Hex, Lock, M6 x 20, Cl 10.9, M6 x 20; 10.9
20	895-15006	6	WASHER, M6 x 25 x 1.6, 6,6 x 25 x 1,6 mm
21	614-8025	6	BOLT, Hex, M8 x 25, 8.8,
22	895-15008	12	WASHER, M8 x 20 x 1.6, 9 x 20 x 1,6 mm
23	832-10408	4	NUT, M8 x 1.25, Cl 8, M8; 8
24	840-168	2	SCREW, Cross Pan Hd, M6 x 8, M6 x 8; 10.9
30	282623A2	1	EXTENSION, Right Hand, Shown
30	282622A2	1	EXTENSION, Left Hand
31	302404A1	4	CLIP, ELECTRICAL, Short
32	302405A1	18	CLIP, ELECTRICAL, Long
33	151-535	4	RIVET, Pop, 1/8" x .462", Pop, 1/8 x 15/32 inch
34	195-81035	4	WASHER, #10,
38	221654A1	2	PLUG, Without Remote Hitch Switch
39	220415A2	2	SWITCH, REMOTE CONTROL, Hitch Control
40	220416A2	2	CONNECTOR, ELEC,
41	82030732	1	DECAL, Right Hand, Shown
41	82030732	1	DECAL, Left Hand
42	892-11006	2	WASHER, LOCK, M6, M6
43	1533637C1	2	PLUG, 12,5 mm

MX285 CASE IH MAGNUM TRACTOR (NORTH AMERICA)

09-08 FENDERS - REAR, EXTRA WIDE

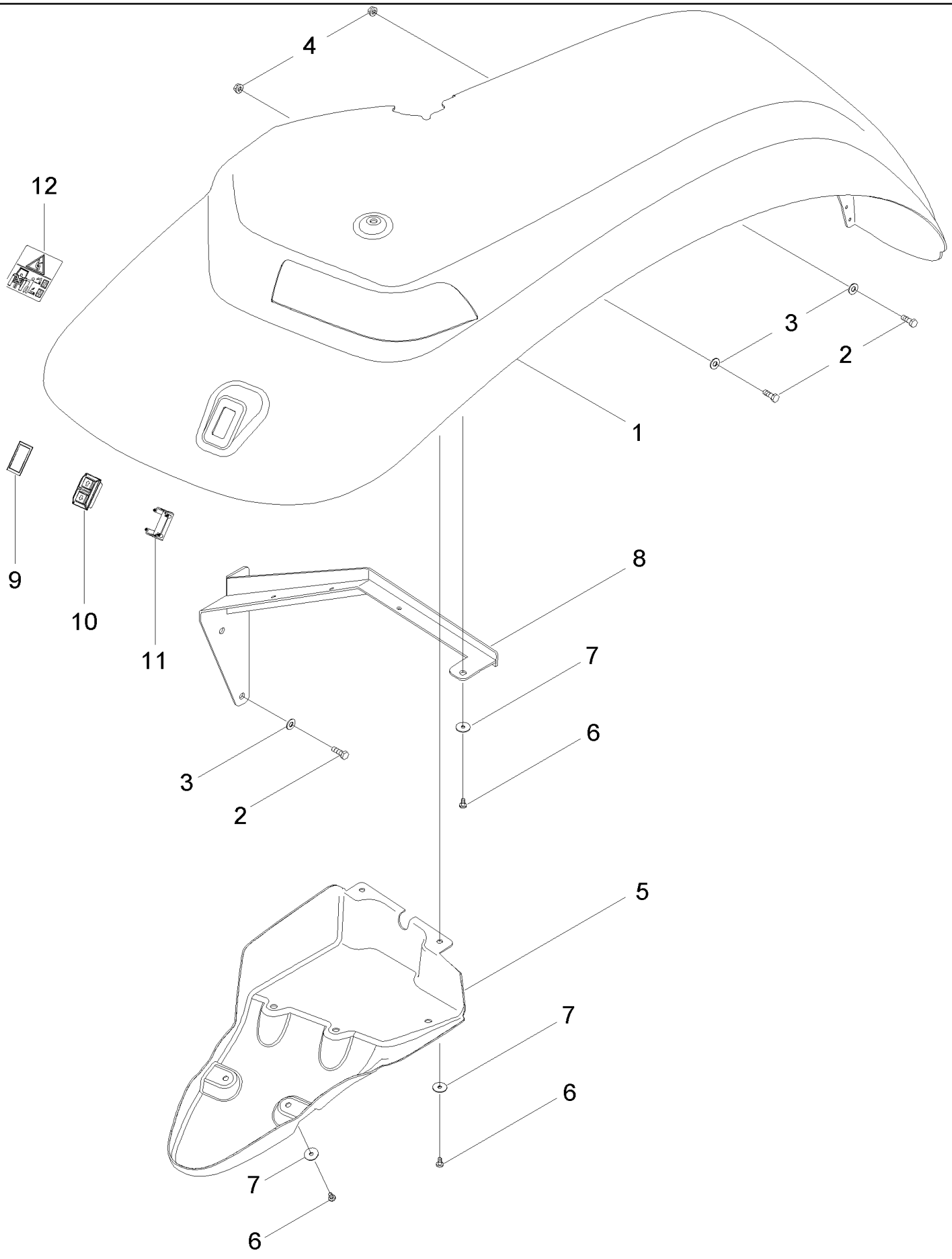

MX285 CASE IH MAGNUM TRACTOR (NORTH AMERICA)

09-08 FENDERS - REAR, EXTRA WIDE

сылка	Номер детали	Кол-во	Описание
1	450894A2	1	FENDER, Right Hand, Shown
1	450895A2	1	FENDER, Left Hand
2	614-8025	18	BOLT, Hex, M8 x 25, 8.8,
3	895-15008	18	WASHER, M8 x 20 x 1.6, 9 x 20 x 1,6 mm
4	825-2408	6	NUT, M8 x 1.25, Flg, Cl 8,
5	450896A2	1	HOUSING, Right Hand, Shown
5	450897A2	1	HOUSING, Left Hand
6	840-1620	10	SCREW, Cross Pan Hd, M6 x 20, M6 x 20; 4,8
7	895-15006	10	WASHER, M6 x 25 x 1.6, 6,6 x 25 x 1,6 mm
8	446342A1	1	SUPPORT, Right Hand, Shown
8	446394A1	1	SUPPORT, Left Hand
9	221654A1	1	PLUG, Without Hitch Switch
10	220415A2	2	SWITCH, REMOTE CONTROL, Hitch Control
11	220416A2	2	CONNECTOR, ELEC,
12	82030732	1	DECAL, Right Hand, Shown
12	82030732	1	DECAL, Left Hand

MX285 CASE IH MAGNUM TRACTOR (NORTH AMERICA)

09-09 HOOD - TILTING

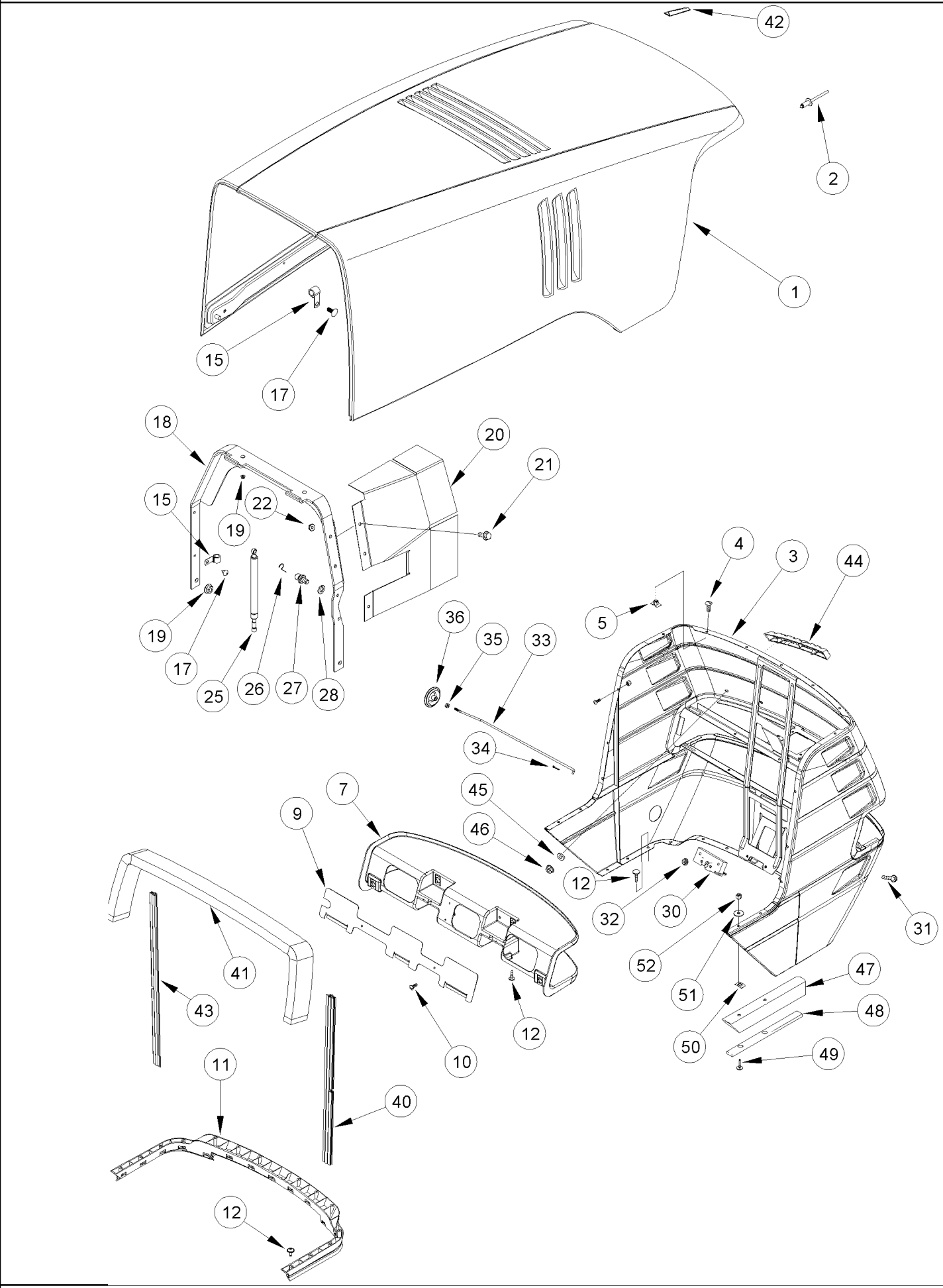

MX285 CASE IH MAGNUM TRACTOR (NORTH AMERICA)

09-09 HOOD - TILTING

ссылка	Номер детали	Кол-во	Описание
1	86988161	1	HOOD ASSY., Inc. 2
2	151-539	4	RIVET, Pop, 3/16" x .450", Pop, 3/16 x 7/16
3	389681A2	1	GRILLE,
4	104033C2	13	SCREW, SELF TAP, Cross Wash Hd, M4.8 x 19, Coated, No. 10 x 3/4
5	131-839	7	NUT, U, #10-16, Panel type,
6	131-833	6	NUT, U, #10-16,
7	257465A2	1	HOUSING, Headlight, North America Only
7	257466A2	1	GRILLE, Headlight, Australia Only
8	104033C2	2	SCREW, SELF TAP, Cross Wash Hd, M4.8 x 19, Coated, No. 10 x 3/4
9	257581A1	1	PLATE,
10	104033C2	2	SCREW, SELF TAP, Cross Wash Hd, M4.8 x 19, Coated, No. 10 x 3/4
11	408239A1	1	MOLDING,
12	1975782C1	20	SCREW, SELF TAP, Cross Truss Wash Hd, #10 x 5/8", No.10 st x 5/8
15	516-22127	7	CLAMP, J, 9/16" Insul, 5/16" Bolt, 1/2 ID
17	93199C1	5	FASTENER,
18	252367A5	1	BRACE,
19	829-1412	3	NUT, M12, Cl 10, M12; 10
19	829-4312	1	NUT, Thin, M12 x 1.75, Cl 05, M12; 10
20	251858A1	1	PROTECTION PLATE,
21	844-8020	3	BOLT, Hex Flg, M8 x 20, 8.8,
22	825-2408	3	NUT, M8 x 1.25, Flg, Cl 8,
25	252636A1	2	CYLINDER ASSY.,
26	3233348R1	4	CLIP,
27	3234063R1	4	BALL JOINT,
28	892-11010	2	WASHER, LOCK, M10, M10
30	R55002	1	LATCH,
31	844-6035	2	BOLT, Hex Flg, M6 x 35, 8.8, M6 x 35; 8.8
32	825-2406	2	NUT, M6 x 1, Flg, Cl 8,
33	297958A2	1	ROD,
34	733-2512	1	PIN, SPLIT (COTTER), M2.5 x 12, 2,5 x 12 mm
35	829-1406	1	NUT, M6, Cl 10, M6; 10.9
36	301222A1	1	BUTTON,
40	281158A1	1	SEAL,
41	281159A1	1	SEAL,
42	1968108C2	1	GUIDE,
43	308101A1	1	SEAL,
44	303520A2	1	SYMBOLS,
45	316098A1	2	SPACER,
46	825-5148	2	NUT, M8, Flg Ser,
47	394774A1	1	GUIDE, Right Hand, Shown
47	394773A1	1	GUIDE, Left Hand
48	394438A1	1	PLATE, BACK,
49	395764A1	4	BOLT, SPECIAL,
50	131-887	2	NUT, 5/32", Push-on, 5/32
51	895-30108	4	WASHER, M4 x 16 x 1.2, 4,4 x 15 x 1,2 mm

ссылка	Номер детали	Кол-во	Описание
52	832-10404	4	NUT, M4 x .7, Cl 8, M4; 8

MX285 CASE IH MAGNUM TRACTOR (NORTH AMERICA)

09-10 FAN SHIELDS

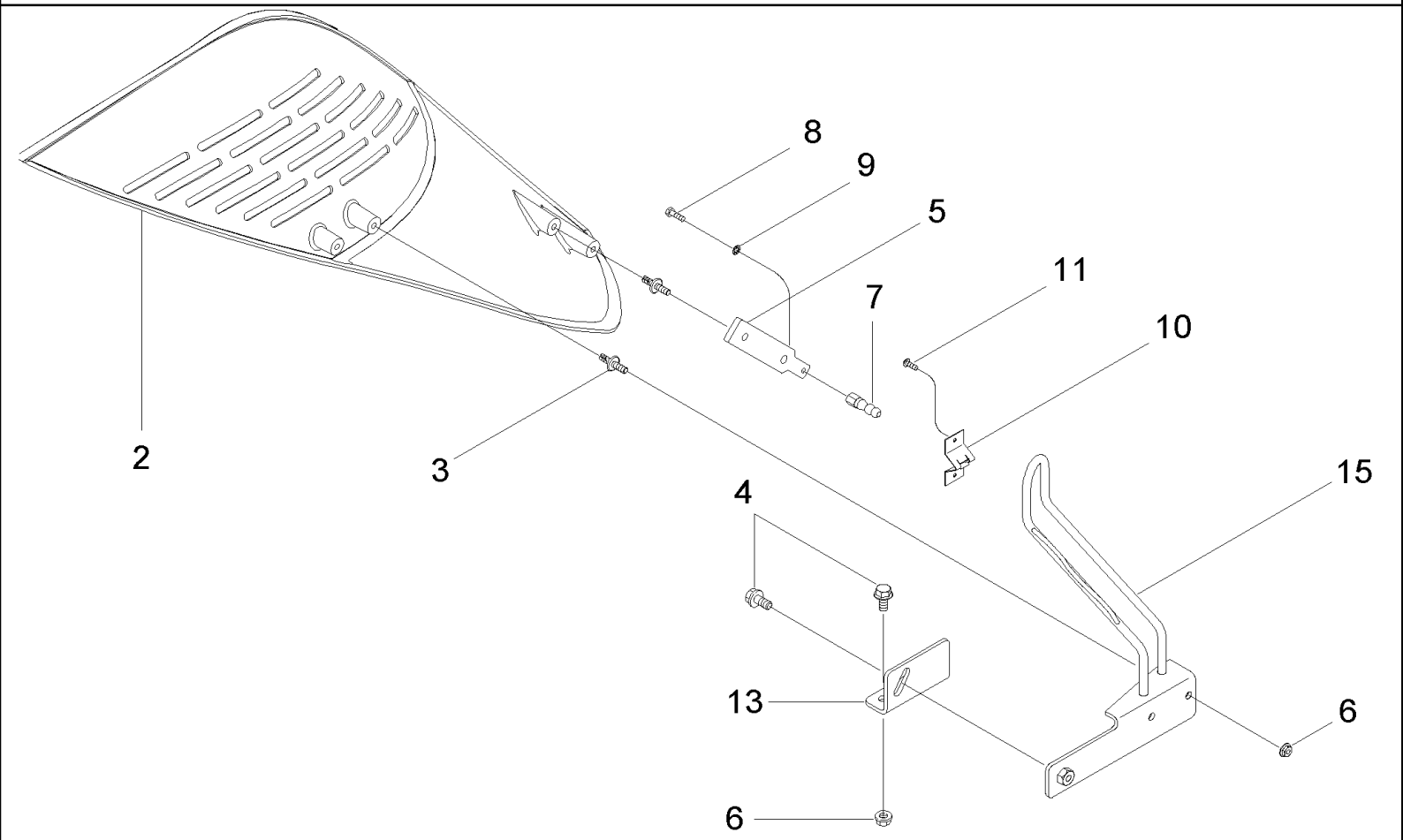

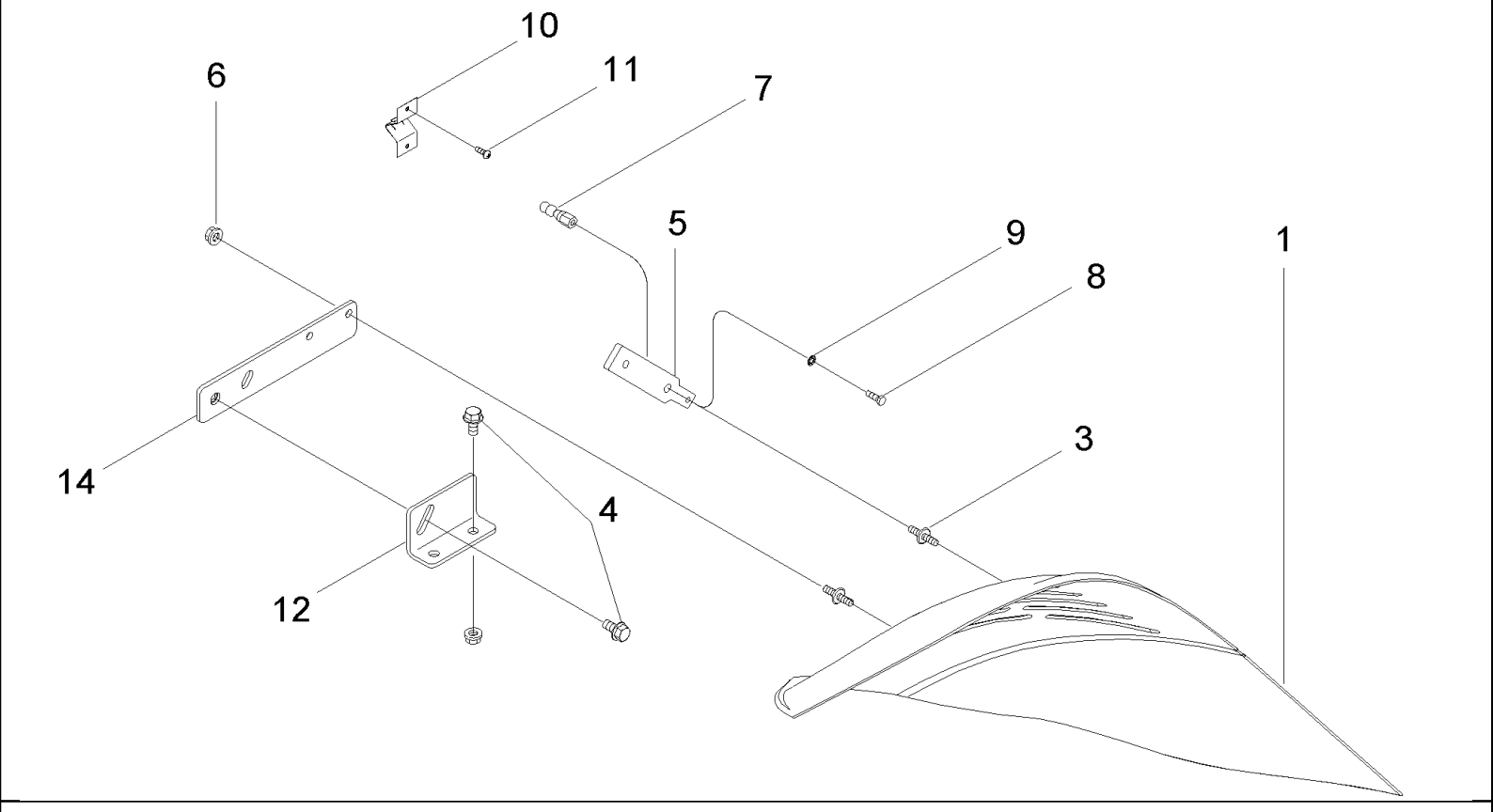

MX285 CASE IH MAGNUM TRACTOR (NORTH AMERICA)

09-10 FAN SHIELDS

ссылка	Номер детали	Кол-во	Описание
1	258610A4	1	PANEL ASSY., Right Hand, Inc. 3
2	258608A4	1	PANEL ASSY., Left Hand, Inc. 3
3	86990119	4	STUD,
4	555-1	6	SCREW, Hex Flg, M8 x 16, 8.8, M8 x 16
5	258248A2	2	PLATE, LARGE,
6	825-2406	4	NUT, M6 x 1, Flg, Cl 8,
7	1348465C1	2	STUD,
8	463-61010	2	SCREW, Hex Hd, #10-32 x 5/8", No. 10 x 5/8
9	493-21020	2	WASHER, LOCK, Int Tooth, #10, 3/16
10	1968039C3	2	FASTENER,
11	260-5448	4	SCREW, SELF TAP, Cross Pan Hd, #8 x 1/2", No. 8 x 1/2
12	86984029	1	PLATE, Right Hand
13	86984040	1	PLATE, Left Hand
14	86984032	1	SUPPORT ASSY., Right Hand
15	87404252	1	BRACKET, Left Hand

MX285 CASE IH MAGNUM TRACTOR (NORTH AMERICA)

09-11 HOOD - FIXED

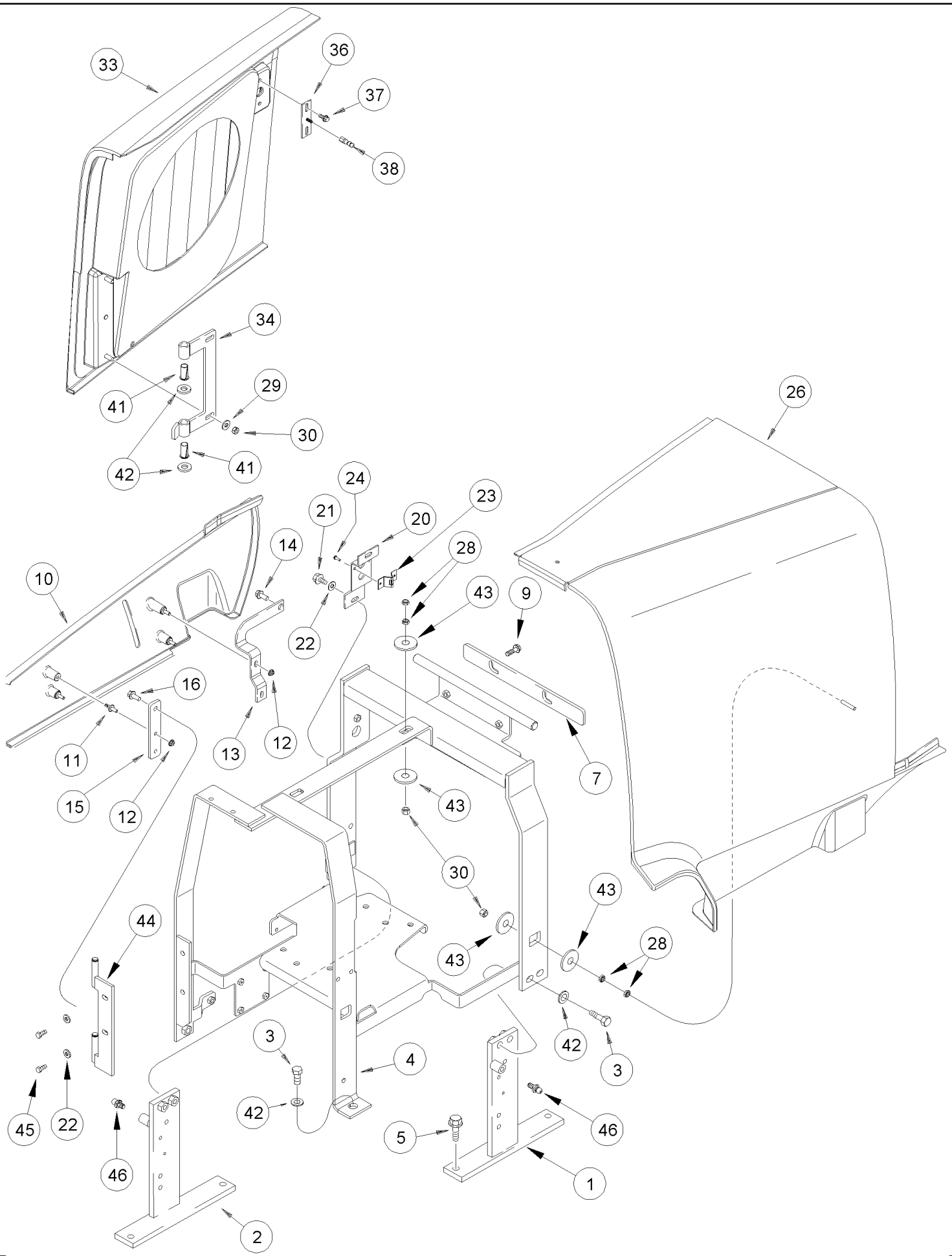

MX285 CASE IH MAGNUM TRACTOR (NORTH AMERICA)

09-11 HOOD - FIXED

ссылка	Номер детали	Кол-во	Описание
1	367683A1	1	BRACKET, Right Hand
2	367684A1	1	BRACKET, Left Hand
3	614-12030	6	BOLT, Hex, M12 x 30, 8.8, M12 x 30; 8.8
4	442844A2	1	SUPPORT ASSY.,
5	854-12035	4	BOLT, Hex Flg, M12 x 35, 10.9, M12 x 35; 10.9
7	248802A2	1	BAR,
9	844-8020	2	BOLT, Hex Flg, M8 x 20, 8.8,
10	254031A4	1	PANEL, SIDE, Inc. 11
11	86990119	4	STUD,
12	825-2406	4	NUT, M6 x 1, Flg, Cl 8,
13	241791A3	1	BRACKET,
14	844-8020	1	BOLT, Hex Flg, M8 x 20, 8.8,
15	297957A2	1	BRACKET,
16	844-8020	1	BOLT, Hex Flg, M8 x 20, 8.8,
20	252293A2	1	SUPPORT,
21	844-8020	2	BOLT, Hex Flg, M8 x 20, 8.8,
22	895-15008	6	WASHER, M8 x 20 x 1.6, 9 x 20 x 1,6 mm
23	1968039C3	1	FASTENER,
24	260-5448	2	SCREW, SELF TAP, Cross Pan Hd, #8 x 1/2", No. 8 x 1/2
26	277303A5	1	PANEL, Standard Duty Air Cleaner (Shown)
26	87416139	1	PANEL, Severe Duty Air Cleaner
28	829-4408	8	NUT, Thin, M8 x 1.25, Cl 05, M8
29	896-15008	8	WASHER, M8 x 21.5 x 2.5, HT, 9 x 21 x 2,5 mm
30	829-1408	6	NUT, M8, Cl 10, M8; 10
33	252114A3	1	PANEL, SIDE, Standard Duty Air Cleaner (Shown)
33	87410540	1	PANEL, SIDE, Severe Duty Air Cleaner
34	251649A2	1	PLATE,
36	448715A1	1	PLATE,
37	844-6016	2	BOLT, Hex Flg, M6 x 16, 8.8,
38	448713A1	1	STUD,
41	236998A1	2	COUPLING,
42	896-15012	6	WASHER, M12 x 28.5 x 4, HT, 13,5 x 28 x 4 mm
43	T101398	8	WASHER,
44	302896A2	1	HINGE,
45	614-8025	4	BOLT, Hex, M8 x 25, 8.8,
46	3234063R1	2	BALL JOINT,

MX285 CASE IH MAGNUM TRACTOR (NORTH AMERICA)

09-12 CAB - MOUNTING AND FRAME, BSN AJB0355923

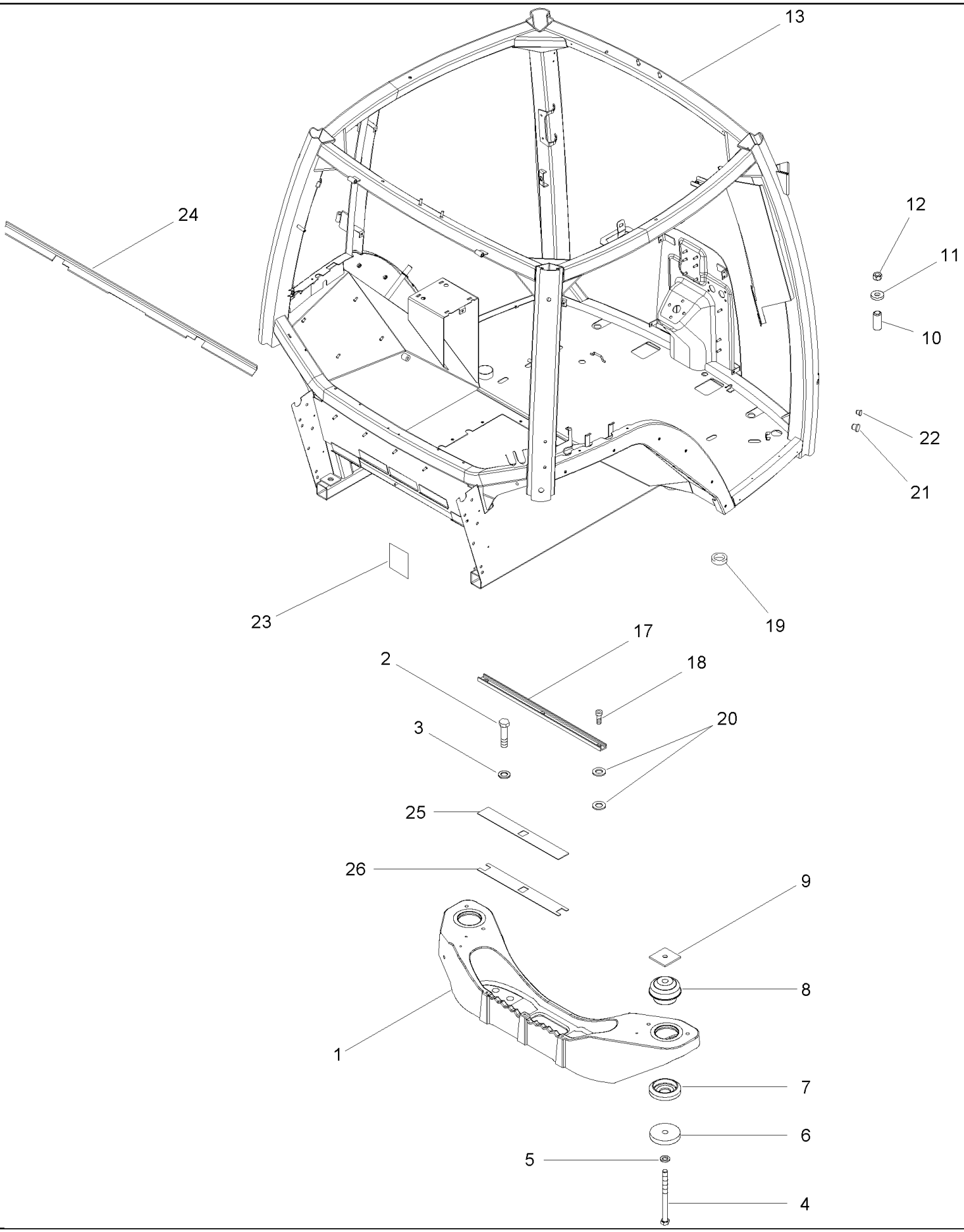

MX285 CASE IH MAGNUM TRACTOR (NORTH AMERICA)

09-12 CAB - MOUNTING AND FRAME, BSN AJB0355923

ссылка	Номер детали	Кол-во	Описание
1	255238A4	1	BRACKET,
2	828-20080	8	BOLT, Hex, M20 x 80, 10.9, M20 x 80; 10.9
3	896-12020	8	WASHER, M20 x 37.5 x 4, HT, 22 x 37 x 4 mm
4	86987599	4	BOLT,
5	896-11016	2	WASHER, M17.5 x 30 x 4, HT, 17,5 x 30 x 4 mm, Front Mount
6	178658A1	4	SPACER, 16 mm
7	1286903C1	4	INSULATOR BLOCK, Bottom
8	192337A1	4	BLOCK, INSULATING, Top
9	86985936	4	PLATE,
10	184262A1	4	SPACER,
11	897278H1	4	WASHER,
12	829-1416	4	NUT, M16, Cl 10, M16; 10
13	NSS	1	NOT SERVICED SEPARATELY, Cab, Frame
17	299432A1	1	BAR,
18	864-8025	3	SCREW, Hex Soc Hd, M8 x 25, 8.8, M8 x 25; 8.8
19	182220A1	1	GROMMET,
20	895-15008	6	WASHER, M8 x 20 x 1.6, 9 x 20 x 1,6 mm
21	128209A1	4	PLUG,
22	353-432	2	PLUG, 7/8" Hole, Nylon, 7/8
23	324053A1	1	DECAL,
24	359321A1	1	GUARD,
25	450986A1	1	SPACER, Upper
26	450931A1	1	SPACER, Lower

MX285 CASE IH MAGNUM TRACTOR (NORTH AMERICA)

09-13 CAB - MOUNTING AND FRAME, ASN AJB0355923

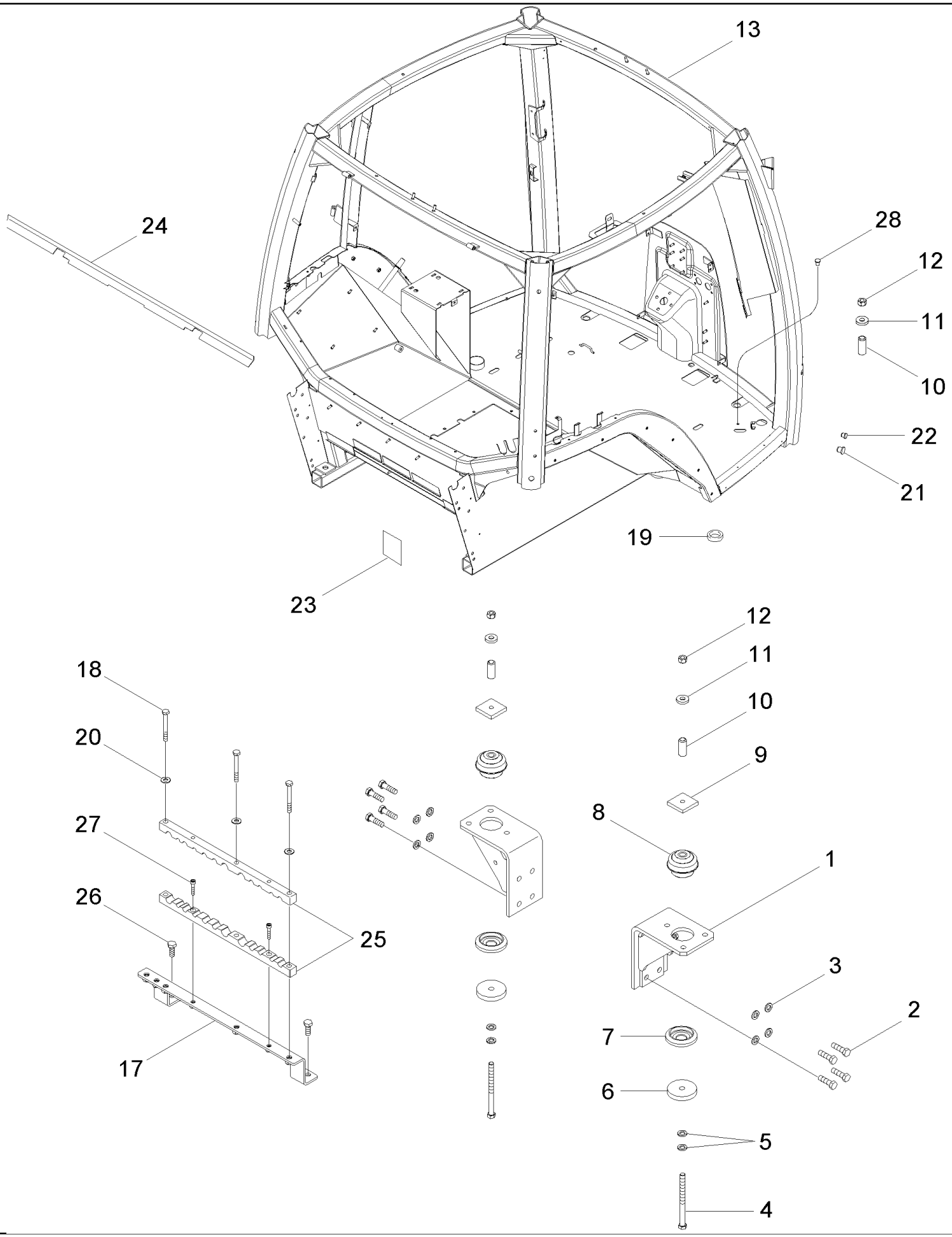

MX285 CASE IH MAGNUM TRACTOR (NORTH AMERICA)

09-13 CAB - MOUNTING AND FRAME, ASN AJB0355923

ссылка	Номер детали	Кол-во	Описание
1	446136A3	2	BRACKET,
2	828-16055	8	BOLT, Hex, M16 x 55, 10.9, Full Thd, Hex, M16 x 55, 10.9, Full Thd
3	896-12016	8	WASHER, M17.5 x 30 x 4, HT, 17,5 x 30 x 4 mm, Hardened
4	86987599	4	BOLT,
5	896-11016	4	WASHER, M17.5 x 30 x 4, HT, 17,5 x 30 x 4 mm, Front Mount
6	178658A1	4	SPACER, 16 mm
7	1286903C1	4	INSULATOR BLOCK, Bottom
8	192337A1	4	BLOCK, INSULATING, Top
9	86985936	4	PLATE,
10	184262A1	4	SPACER,
11	897278H1	4	WASHER,
12	829-1416	4	NUT, M16, Cl 10, M16; 10
13	NSS	1	NOT SERVICED SEPARATELY, Cab, Frame
17	87435455	1	BRACKET,
18	814-8060	3	BOLT, Hex, M8 x 60, 8.8, M8 x 60; 8.8
19	182220A1	1	GROMMET,
20	895-15008	3	WASHER, M8 x 20 x 1.6, 9 x 20 x 1,6 mm
21	128209A1	4	PLUG,
22	353-432	2	PLUG, 7/8" Hole, Nylon, 7/8
23	324053A1	1	DECAL,
24	359321A1	1	GUARD,
25	87430951	1	BAR, Clamp, 2 Piece
26	615-10025	2	BOLT, Hex, M10 x 25, 8.8, Full Thd, M10 x 25
27	864-6030	2	SCREW, Hex Soc Hd, M6 x 30, 8.8, Socket Head, M6 x 30
28	441460A1	1	PLUG, 9,5 mm

MX285 CASE IH MAGNUM TRACTOR (NORTH AMERICA)

09-14 CAB - ROOF

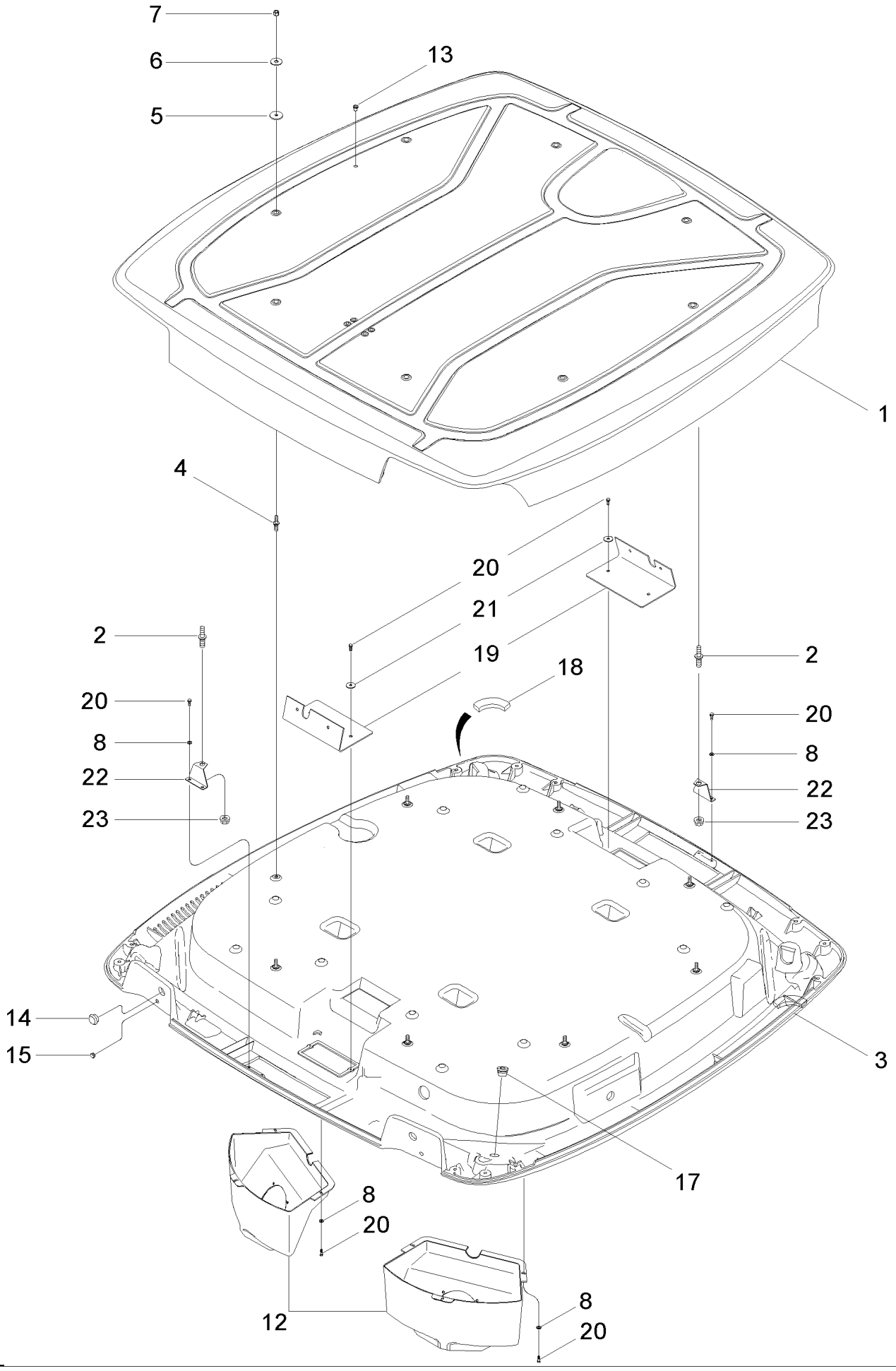

MX285 CASE IH MAGNUM TRACTOR (NORTH AMERICA)

09-14 CAB - ROOF

ссылка	Номер детали	Кол-во	Описание
1	433973A3	1	ROOF, Upper, Inc. 2
2	449901A1	2	STUD,
3	437785A3	1	ROOF, Lower, Inc. 4
4	237275A1	8	STUD,
5	221429A2	8	SPACER,
6	495-81140	8	WASHER, 13/32" x 1 1/4" x .060", 13/32 x 1-1/4 x 1/16
7	832-10408	8	NUT, M8 x 1.25, Cl 8, M8; 8
8	895-11006	12	WASHER, M6, 6,6 x 12 x 1,6 mm
12	433800A1	4	HOUSING, Speaker Cover
13	441460A1	1	PLUG,
14	353-411	2	PLUG, Dome, 1.000" hole, Nylon, 1 in dia
15	353-425	2	PLUG, 7/16 in dia
17	182220A1	1	GROMMET,
18	365219A1	1	SEAL,
19	401110A2	2	BRACKET,
20	758-5	20	SCREW, SELF TAP, Hex Hd, M5.5 x 15, M5,5 x 15
21	895-15006	4	WASHER, M6 x 25 x 1.6, 6,6 x 25 x 1,6 mm
22	449074A1	2	BRACKET,
23	832-4748	2	NUT, LOCK, M8 x 1.25, Flg, Cl 8, M8

MX285 CASE IH MAGNUM TRACTOR (NORTH AMERICA)

09-15 CAB - EXTERIOR TRIM

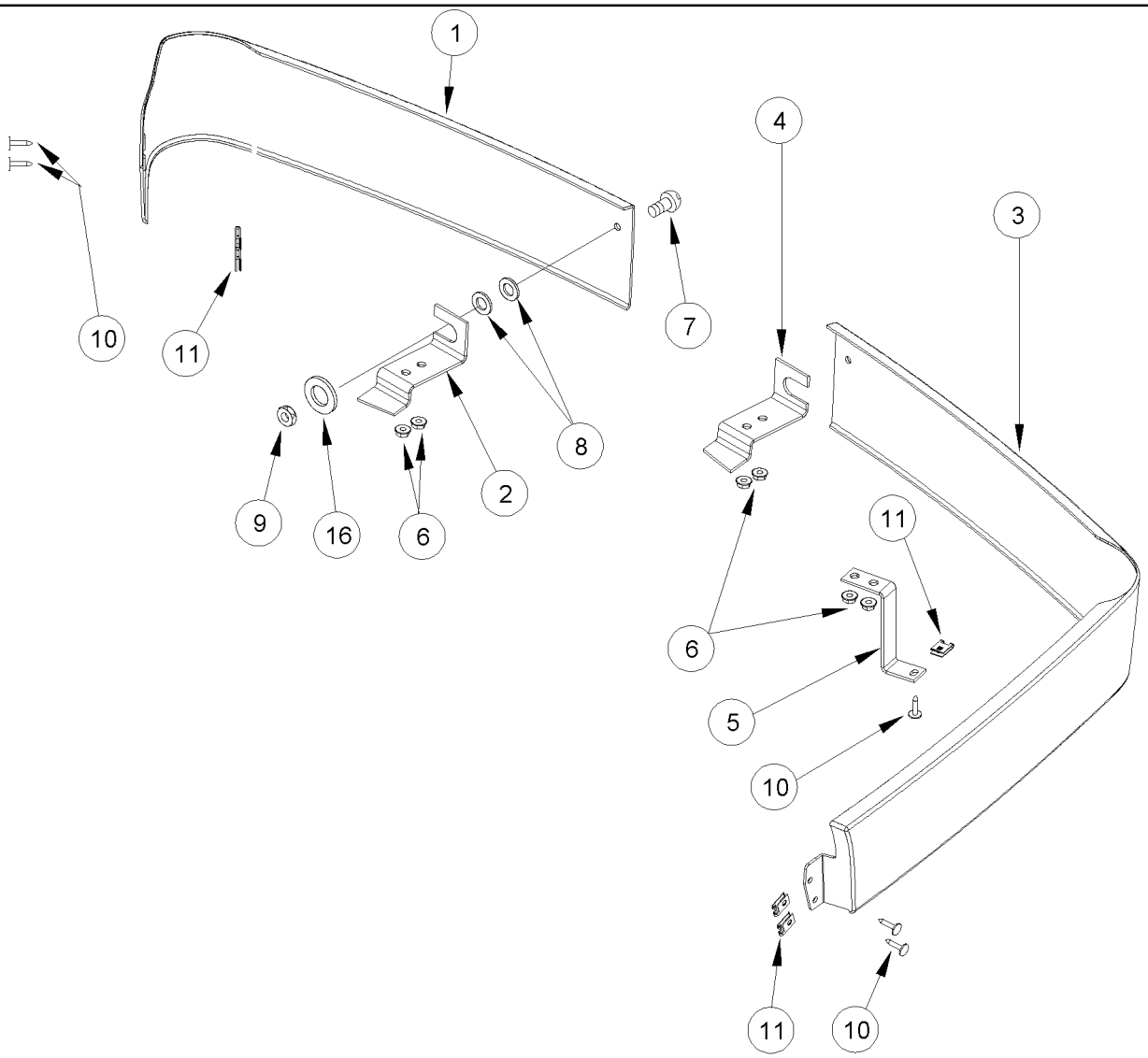

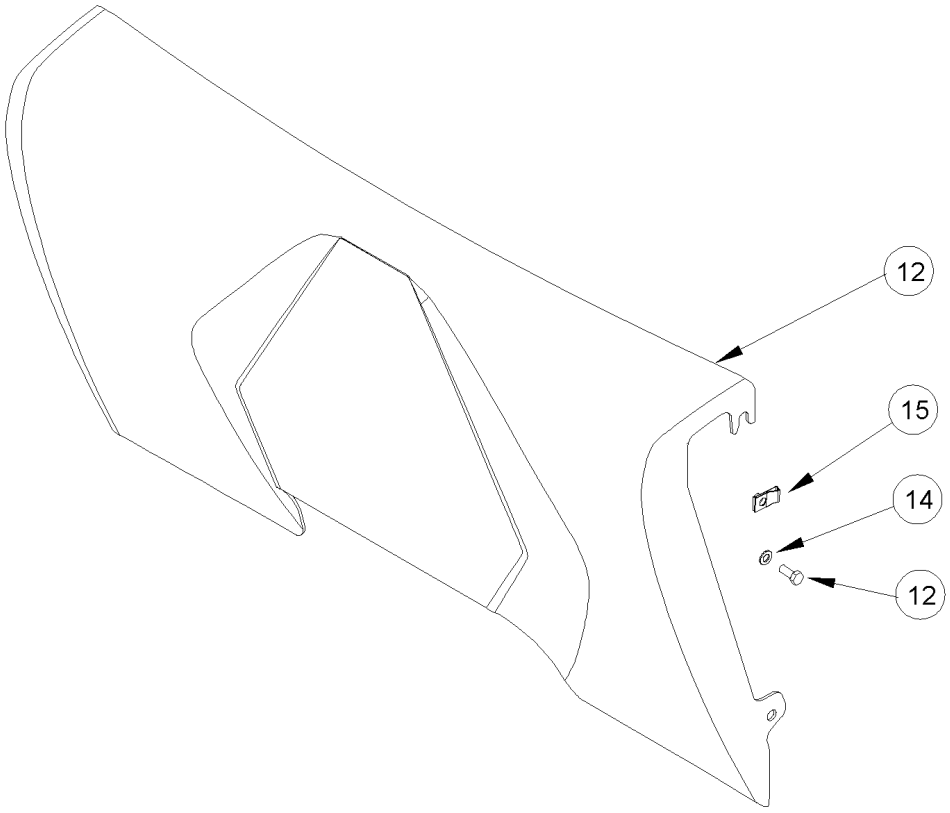

MX285 CASE IH MAGNUM TRACTOR (NORTH AMERICA)

09-15 CAB - EXTERIOR TRIM

ссылка	Номер детали	Кол-во	Описание
1	258865A4	1	PADDING, Front Left Hand Side
2	298465A2	1	SUPPORT, Left Hand
3	258866A4	1	PADDING, Front Right Hand Side
4	300432A2	1	NO DESCRIPTION, Right Hand
5	298464A1	1	SUPPORT,
6	825-2408	6	NUT, M8 x 1.25, Flg, Cl 8,
7	840-1820	2	SCREW, Cross Pan Hd, M8 x 20, M8 x 20
8	96814C3	4	WASHER,
9	832-10408	2	NUT, M8 x 1.25, Cl 8, M8; 8
10	104033C2	5	SCREW, SELF TAP, Cross Wash Hd, M4.8 x 19, Coated, No. 10 x 3/4
11	131-642	5	NUT, Tinn, U, #10, No. 10
12	387123A3	1	PANEL, Rear
13	614-8020	4	BOLT, Hex, M8 x 20, 8.8, M8 x 20; 8.8
14	895-11008	4	WASHER, M8 x 16 x 1.6, 9 x 17 x 1,6 mm
15	833-41308	4	NUT, M8, U, M8
16	495-81140	2	WASHER, 13/32" x 1 1/4" x .060", 13/32 x 1-1/4 x 1/16

MX285 CASE IH MAGNUM TRACTOR (NORTH AMERICA)

09-16 CAB - STEPS

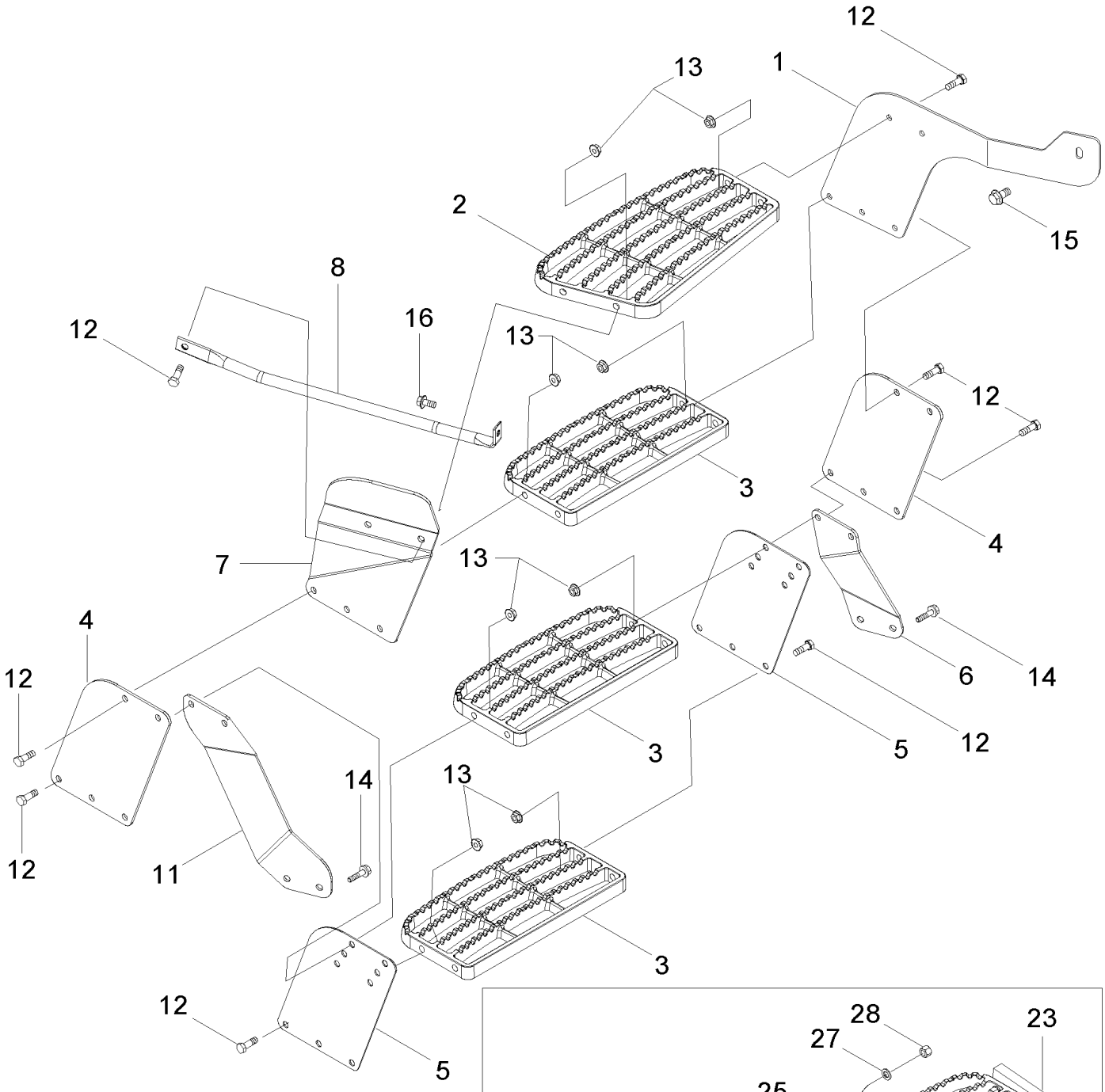

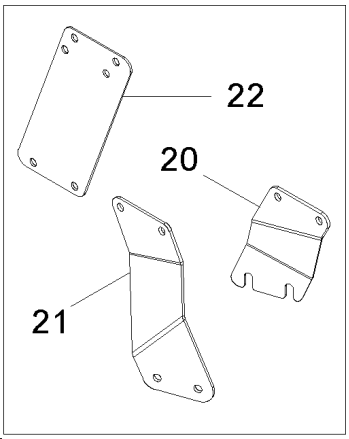

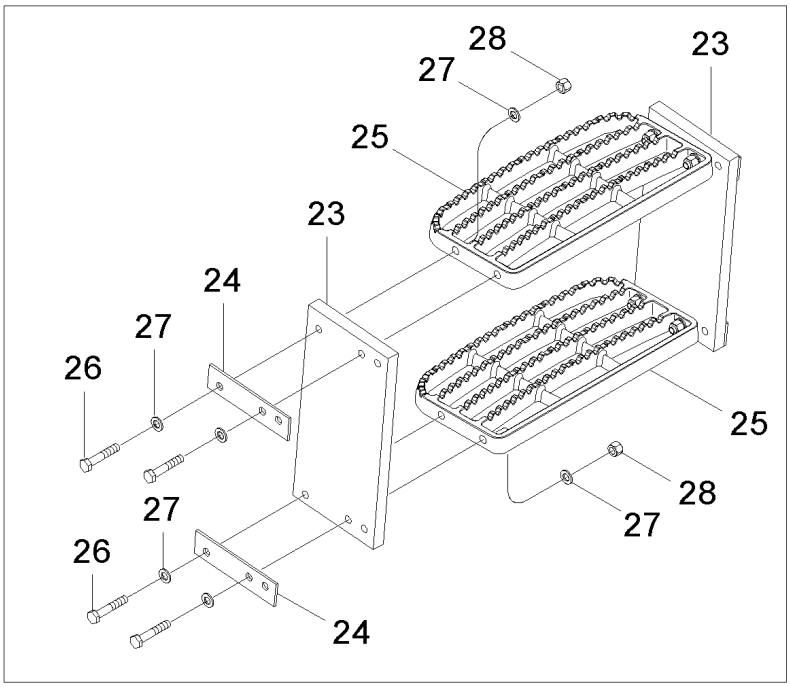

MX285 CASE IH MAGNUM TRACTOR (NORTH AMERICA)

09-16 CAB - STEPS

ссылка	Номер детали	Кол-во	Описание
1	418776A2	1	RISER, Front, Upper, BSN AJB0355923
1	87433174	1	RISER, Front, Upper, ASN AJB0355923
2	257374A1	1	STEP, Upper
3	257375A1	3	STEP,
4	247282A2	2	RISER, Center
5	418779A1	2	RISER, Lower
6	418780A1	1	BRACKET, Front
7	257911A2	1	RISER, Rear, Upper
8	253698A3	1	SUPPORT,
11	418781A1	1	BRACKET, Rear
12	87012915	16	BOLT, Hex, M10 x 35, 8.8, Full Thd, M10 x 35
13	1348399C1	16	NUT, M10
14	555-7	4	BOLT, Hex Flg, M10 x 30, 8.8, Full Thd, M10 x 30; 8.8
15	555-6	1	BOLT, Hex Flg, M12 x 25, 8.8, Full Thd, M12 x 25; 8.8, BSN AJB0355923
15	555-5	1	BOLT, Hex Flg, M10 x 25, 8.8, Full Thd, M10 x 25; 8.8, ASN AJB0355923
16	555-4	1	BOLT, Hex Flg, M10 x 20, 8.8, Full Thd, M10 x 20; 8.8
20	446065A1	1	BRACKET, Narrow Step Arrangement
21	446066A1	1	BRACKET, Narrow Step Arrangement
22	446064A1	2	RISER, Narrow Step Arrangement
23	322425A1	2	SUPPORT, Step Extension (If Equipped)
24	448033A1	4	PLATE, LARGE, Belting Support (If Equipped)
25	257375A1	1	STEP,
26	814-10055	8	BOLT, Hex, M10 x 55, 8.8, M10 x 55; 8.8
27	895-11010	16	WASHER, M10 x 20 x 2, 11 x 20 x 2 mm
28	832-10410	8	NUT, LOCK, M10 x 1.5, Cl 8,

MX285 CASE IH MAGNUM TRACTOR (NORTH AMERICA)

09-17 CAB - FRONT WINDOW STEP

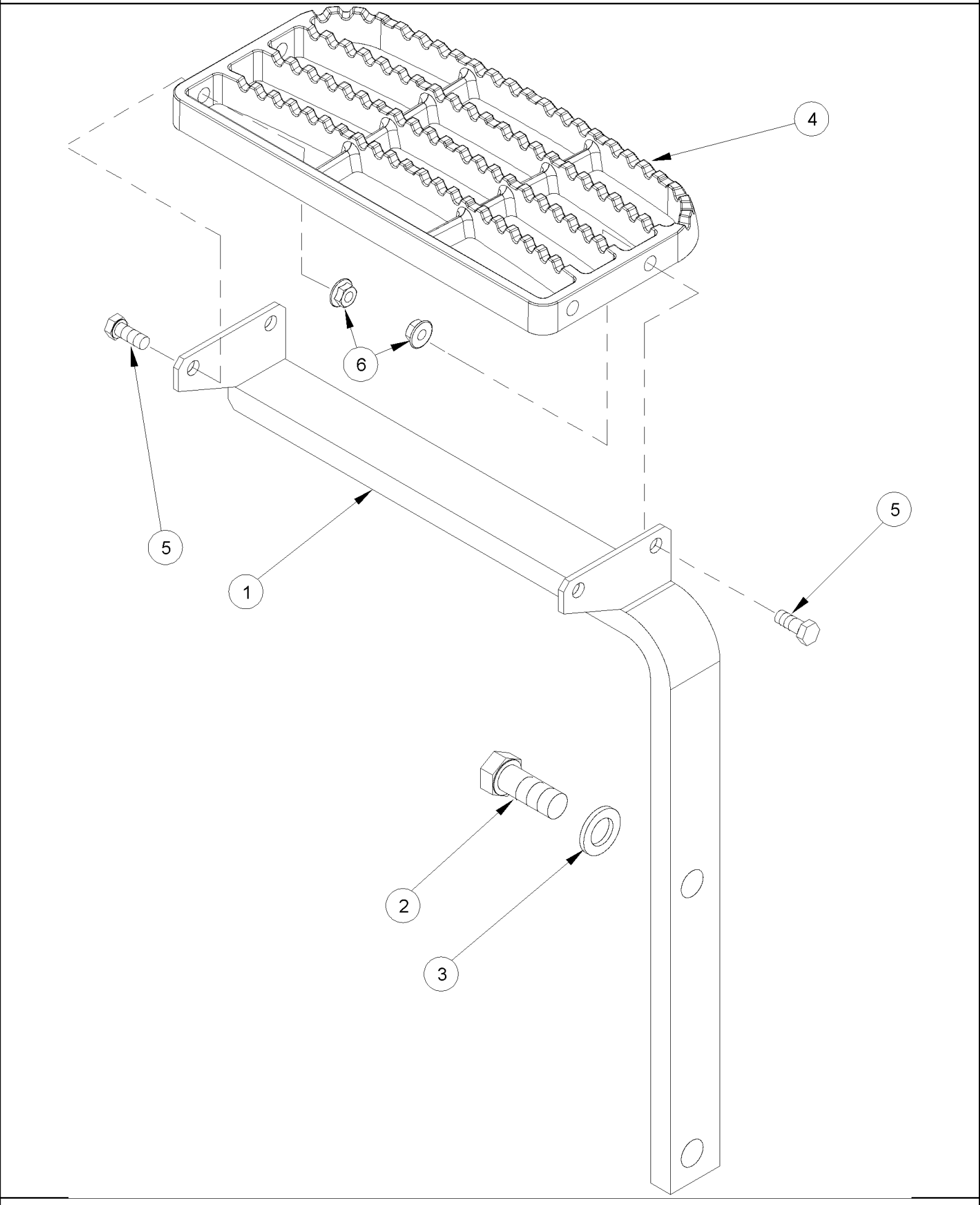

MX285 CASE IH MAGNUM TRACTOR (NORTH AMERICA)

09-17 CAB - FRONT WINDOW STEP

ссылка	Номер детали	Кол-во	Описание
	308727A	1	KIT, Inc. 1 - 6, Order From Machinery Price List
1	284654A1	1	SUPPORT,
2	627-20050	2	SCREW, Hex, M20 x 50, 10.9, M20 x 50; 10.9
3	896-11020	2	WASHER, M20 x 37.5 x 4, HT, 22 x 37 x 4 mm
4	257375A1	1	STEP,
5	614-10025	4	BOLT, Hex, M10 x 25, 8.8, Full Thd, M10 x 25
6	825-2410	4	NUT, M10 x 1.5, Flg, Cl 8, M10

MX285 CASE IH MAGNUM TRACTOR (NORTH AMERICA)

09-18 CAB - DOOR

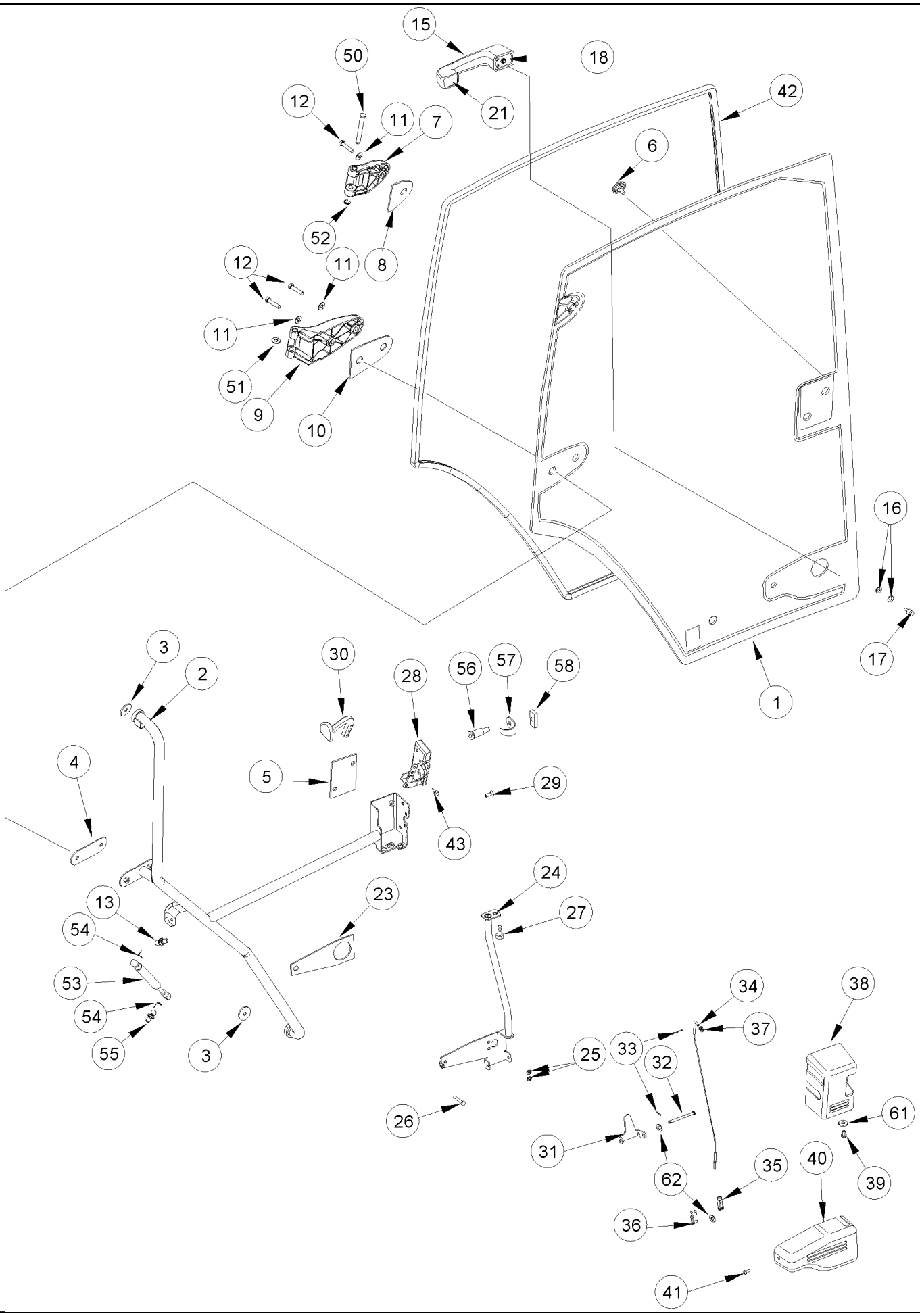

MX285 CASE IH MAGNUM TRACTOR (NORTH AMERICA)

09-18 CAB - DOOR

ссылка	Номер детали	Кол-во	Описание
	316518A3	1	DOOR ASSY., Inc. 1 - 13, 15 - 43, Order Components
1	344730A1	1	GLASS, CAB,
2	344728A1	1	HANDLE,
3	221429A2	2	SPACER,
4	308633A1	1	SPACER, 3,0 mm
5	275352A2	1	SPACER,
6	198916A2	3	CAP,
7	304921A1	1	HINGE, Upper
8	305158A1	1	SPACER,
9	191206A3	1	HINGE, Lower
10	305159A1	1	SPACER,
11	895-15008	3	WASHER, M8 x 20 x 1.6, 9 x 20 x 1,6 mm
12	614-8035	3	BOLT, Hex, M8 x 35, 8.8, M8 x 35; 8.8
13	3234063R1	1	BALL JOINT,
14	1964831C2	1	SET OF 2 KEYS, (Not Shown)
15	60-7083T1	1	HANDLE,
16	495-31027	2	WASHER, 1/4", 17/64 x 5/8 x 3/64
17	314610A1	1	BUTTON,
18	321551A1	1	BEZEL,
21	321552A1	1	BEZEL,
23	191939A3	1	SPACER,
24	275359A3	1	SUPPORT,
25	892-11006	3	WASHER, LOCK, M6, M6
26	814-6035	3	BOLT, Hex, M6 x 35, 8.8, Hex, M6 x 35, 8.8
27	614-8016	1	BOLT, Hex, M8 x 16, 8.8,
28	321013A1	1	LOCK,
29	461-42512	4	SCREW, Hex Soc Flat Hd, 1/4"-20 x 3/4", 1/4 x 3/4
30	321023A3	1	HANDLE,
31	314611A1	1	LEVER,
32	275353A1	1	PIN, BALL,
33	733-1610	3	PIN, SPLIT (COTTER), M1.6 x 10, 1,6 x 10 mm
34	314606A1	1	CABLE,
35	713-125	1	CLEVIS, ADJUSTABLE,
36	1999650C1	1	PIN, CLEVIS,
37	895-11005	2	WASHER, M5 x 10 x 1, 5,5 x 10 x 1 mm
38	275344A6	1	PROTECTOR,
39	840-1612	1	SCREW, Cross Pan Hd, M6 x 12, M6 x 12; 4.8
40	275345A4	1	COVER,
41	840-1512	1	SCREW, Cross Pan Hd, M5 x 12, M5 x 12
42	254772A3	1	SEAL,
43	781-44625	2	SCREW, SELF TAP, Hex Flg Hd, M6 x 25, M6 x 25
50	178819A3	2	PIN,
51	895-18010	1	WASHER, M10 x 18 x 1.6, 11 x 18 x 1,6 mm
52	800-439	2	CIRCLIP, M9, 9 mm
53	1280263C1	1	CYLINDER ASSY.,

ссылка	Номер детали	Кол-во	Описание
54	3233348R1	2	CLIP,
55	3234063R1	1	BALL JOINT,
56	321277A1	1	PIN,
57	321535A1	1	PROTECTOR,
58	275444A1	1	PLATE,
61	895-11006	1	WASHER, M6, 6,6 x 12 x 1,6 mm
62	431941A1	2	WASHER, Curve Spring

MX285 CASE IH MAGNUM TRACTOR (NORTH AMERICA)

09-19 CAB - REAR WINDOW

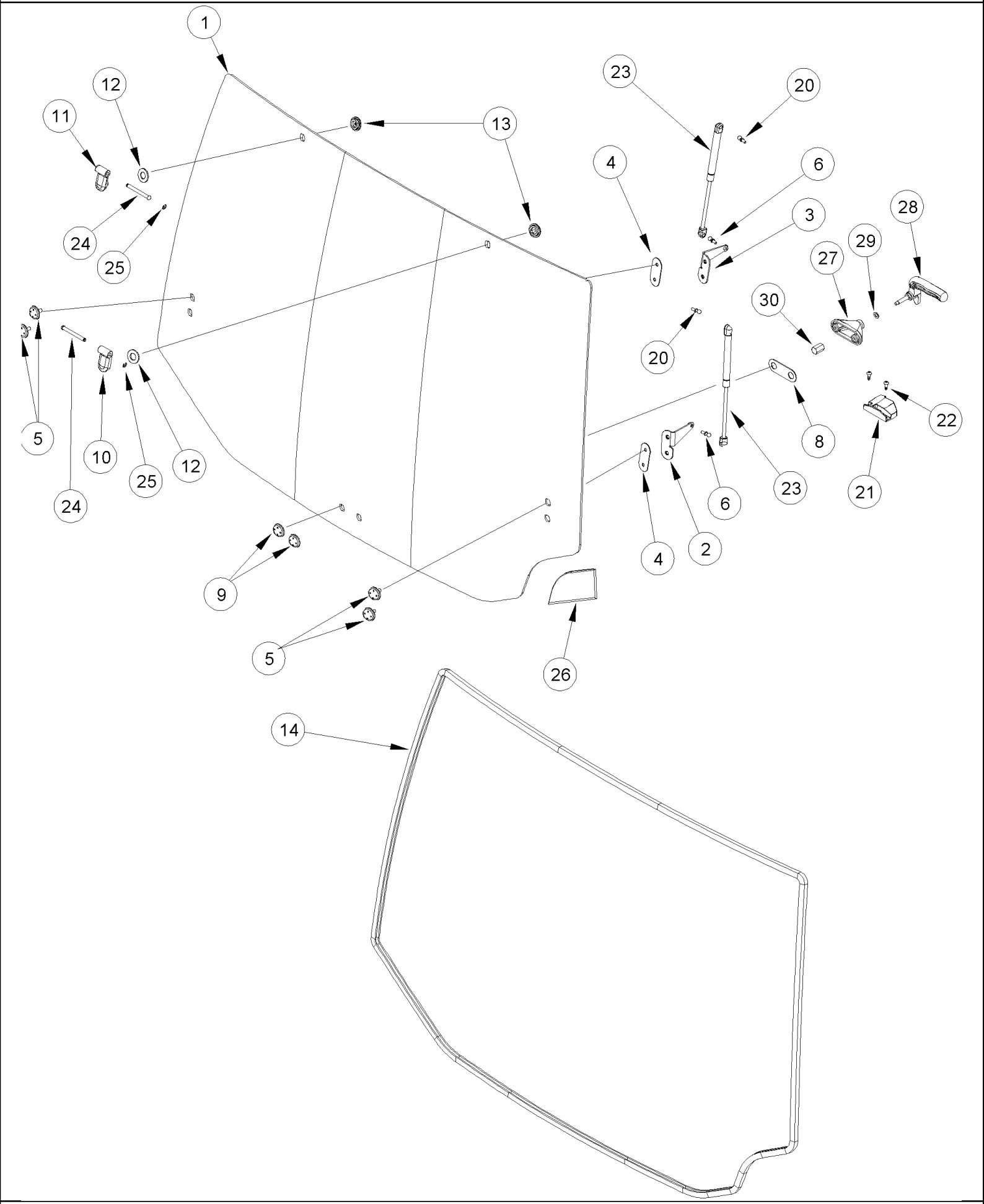

MX285 CASE IH MAGNUM TRACTOR (NORTH AMERICA)

09-19 CAB - REAR WINDOW

ссылка	Номер детали	Кол-во	Описание
1	242667A4	1	GLASS, , Standard Cab, Deluxe Cab
1	360033A1	1	GLASS, CAB, Tinted, Luxury Cab
2	256810A1	1	SUPPORT, Right Hand
3	256809A1	1	SUPPORT, Left Hand
4	222787A2	2	PAD,
5	198916A2	4	CAP,
6	K303756	1	BALL JOINT, 6 mm
8	220935A3	1	PAD,
9	198913A3	2	PLASTIC PLUG,
10	176246A2	1	HINGE, Right Hand
11	176245A2	1	HINGE, Left Hand
12	180361A2	2	WASHER,
13	198913A3	2	PLASTIC PLUG,
14	254772A3	1	SEAL,
20	K303756	1	BALL JOINT, 6 mm
21	186149A4	1	PLATE, STRIKER,
22	781-24620	2	SCREW, SELF TAP, Hex Flg Hd, M6 x 20, M6 X 20
23	252550A2	2	GAS STRUT,
24	1535323C1	2	PIN,
25	800-437	2	CIRCLIP, M7, 7 mm
26	254711A1	1	GROMMET,
	230009A4	1	HANDLE, Inc. 27 - 30
27	NSS	1	NOT SERVICED SEPARATELY, Support
28	NSS	1	NOT SERVICED SEPARATELY, Handle
29	NSS	1	NOT SERVICED SEPARATELY, Washer
30	NSS	1	NOT SERVICED SEPARATELY, Nut, Special

MX285 CASE IH MAGNUM TRACTOR (NORTH AMERICA)

09-20 CAB - FIXED GLASS

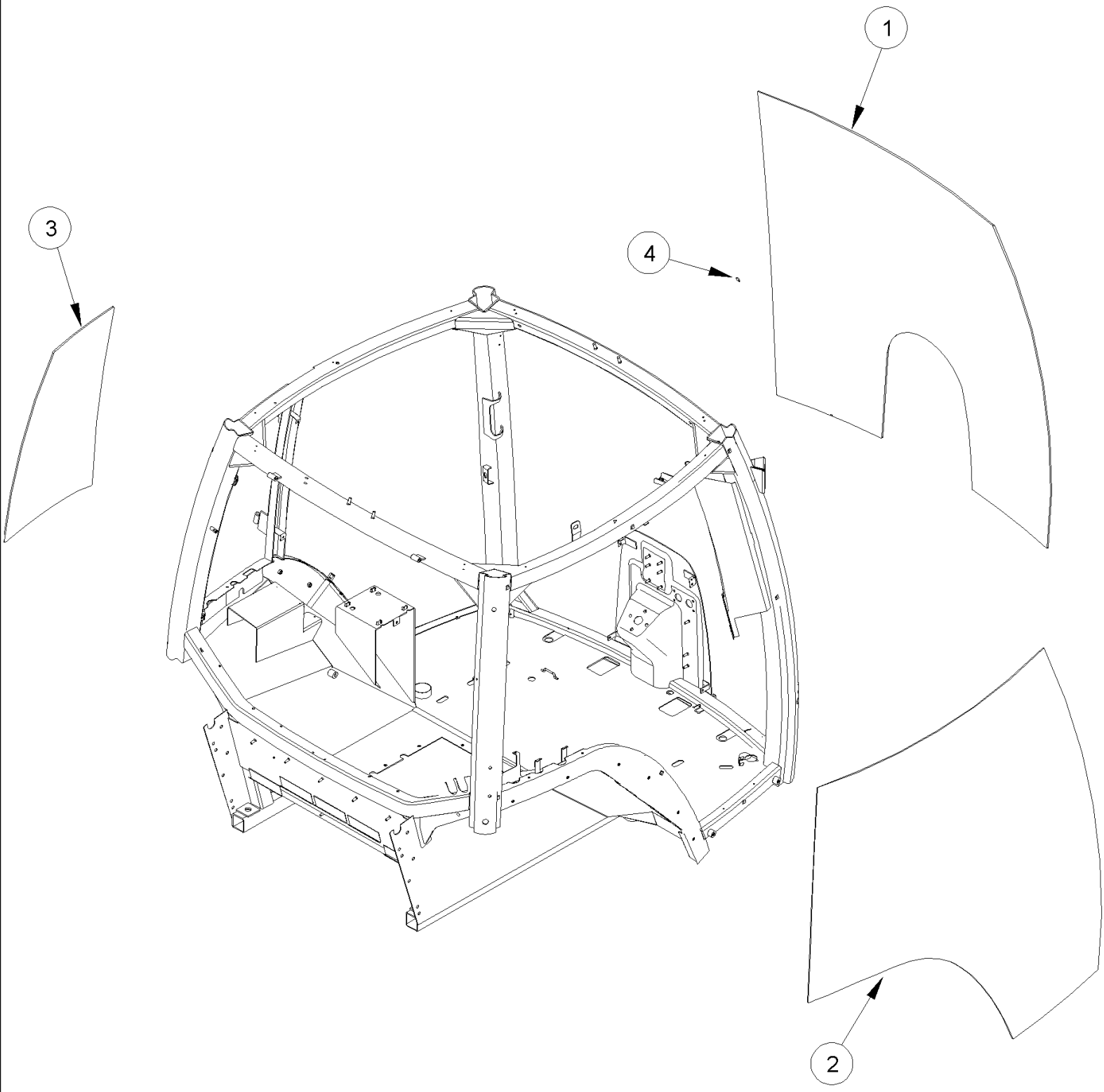

MX285 CASE IH MAGNUM TRACTOR (NORTH AMERICA)

09-20 CAB - FIXED GLASS

ссылка	Номер детали	Кол-во	Описание
1	242537A5	1	WINDSHIELD, Windshield
2	242536A5	1	GLASS, CAB, Right Hand
3	242539A4	1	GLASS, CAB, Left Hand
4	P741441	20	SPACER,

MX285 CASE IH MAGNUM TRACTOR (NORTH AMERICA)

09-21 MIRRORS

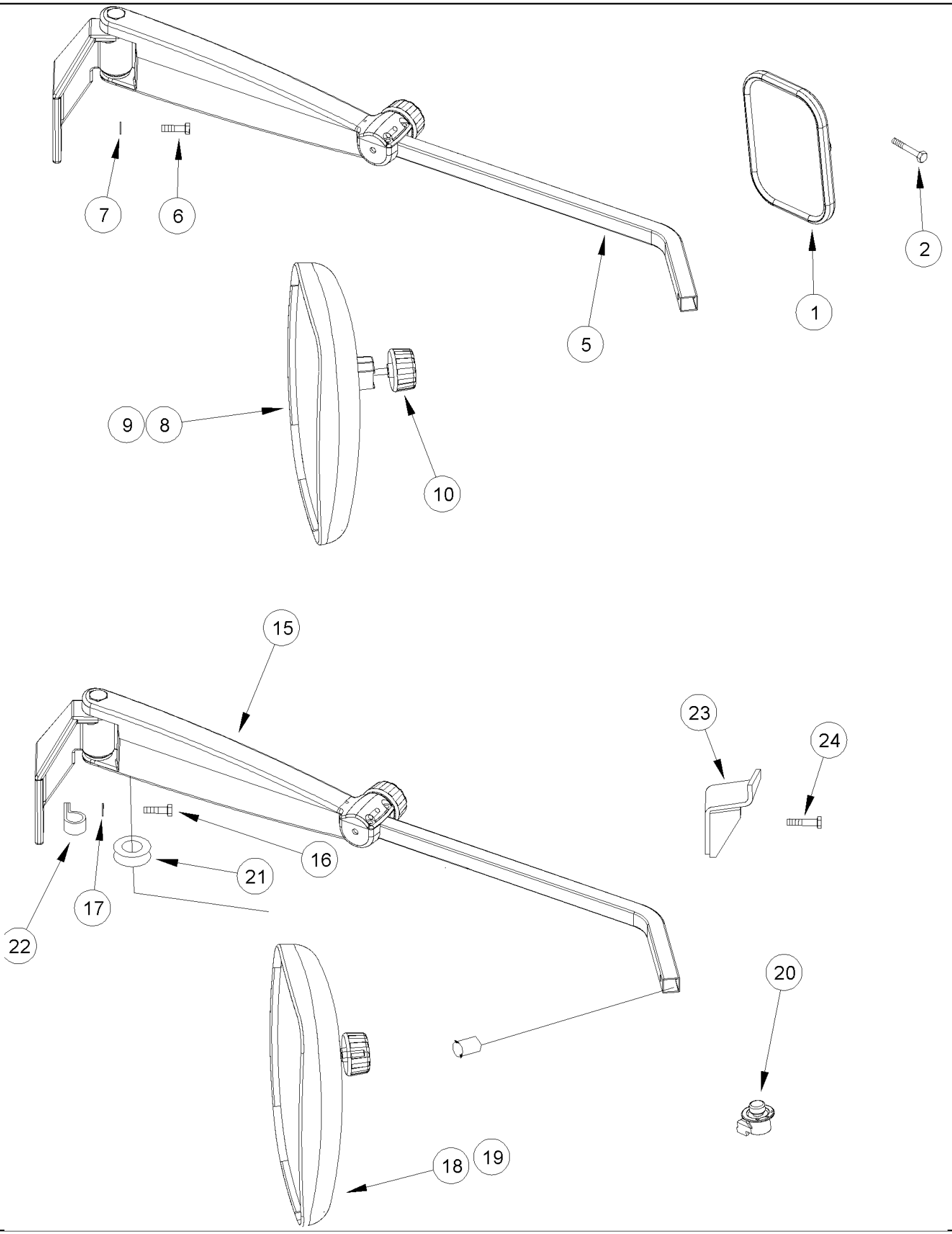

MX285 CASE IH MAGNUM TRACTOR (NORTH AMERICA)

09-21 MIRRORS

ссылка	Номер детали	Кол-во	Описание
1	235992A1	1	MIRROR, Interior
2	779-34616	2	SCREW, SELF TAP, Hex Hd, M6.3 x 16, M6,3 x 16
5	297024A2	1	SUPPORT ASSY., Right Hand, Shown
5	297025A2	1	SUPPORT ASSY., Left Hand
6	614-8030	6	BOLT, Hex, M8 x 30, 8.8, M8 x 30; 8.8
7	895-11008	6	WASHER, M8 x 16 x 1.6, 9 x 17 x 1,6 mm
8	297017A1	2	MIRROR, Inc. 9, 10
9	324437A1	1	MIRROR, REPLACEMENT,
10	324439A1	1	BUTTON,
15	297026A2	1	ARM ASSY., Right Hand, Shown
15	297027A2	1	ARM ASSY., Left Hand
16	614-8030	6	BOLT, Hex, M8 x 30, 8.8, M8 x 30; 8.8
17	895-11008	6	WASHER, M8 x 16 x 1.6, 9 x 17 x 1,6 mm
18	297021A1	2	MIRROR, Remote Control, Inc.19
19	324437A1	1	MIRROR, REPLACEMENT,
20	280627A1	1	SWITCH, Remote Control
21	182045A1	2	GROMMET,
22	515-2395	2	CLAMP, 3/8", Insul, 3/8" Bolt, 3/8 ID
23	375261A1	1	BRACKET, Right Hand, Shown, BSN JAZ131821
23	374653A1	1	BRACKET, Left Hand, BSN JAZ131821
24	514-637	2	BOLT, Hex, M8 x 35, 8.8, Full Thd, M8 x 35, BSN JAZ131821

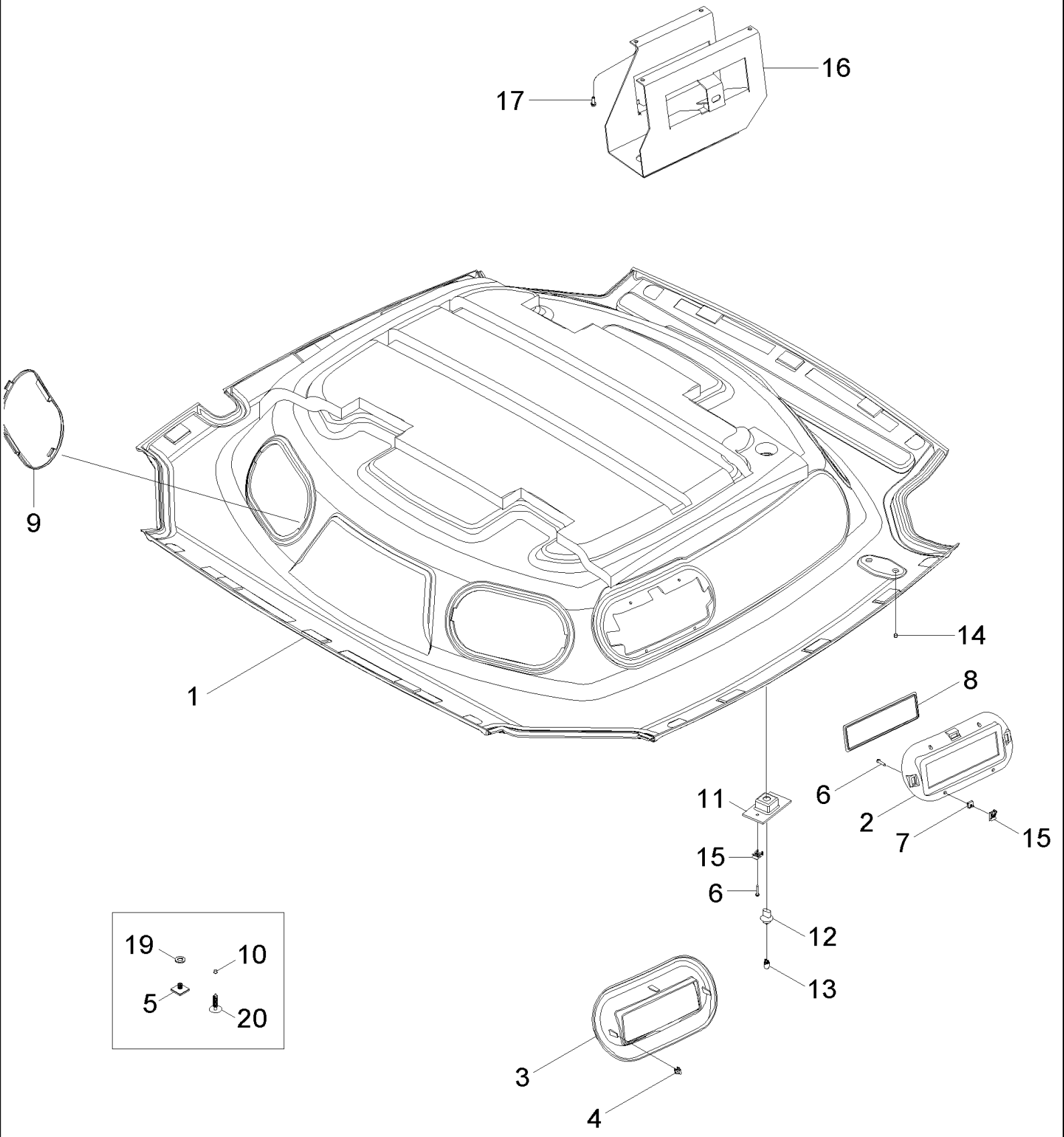
17
16
9
1
14
8
6
2
7
15
11
15
6
12
13
19
10
5
20
3
4

MX285 CASE IH MAGNUM TRACTOR (NORTH AMERICA)

09-22 CAB - HEADLINER, STANDARD TRIM

ссылка	Номер детали	Кол-во	Описание
1	400827A2	1	LINING, ROOF,
2	358790A1	1	ANCHOR, Radio
3	358772A1	1	BEZEL,
4	278316A2	3	CLIP,
5	409206A1	12	FASTENER,
6	761-17325	6	SCREW, SELF TAP, Pan Hd, M4.2 x 25, M4,2 x 25
7	177269A1	2	NUT,
8	1535219C1	1	COVER, Without Radio
9	358683A1	4	GRILLE, Speaker Cover
10	292675A1	2	PLUG,
11	368143A1	1	LAMP, Inc. 12, 13
12	107329C1	1	CABLE ASSY.,
13	D71346	1	LAMP, TAIL,
14	292675A1	1	PLUG,
15	442244A1	6	NUT,
16	428264A4	1	BRACKET,
17	758-5	4	SCREW, SELF TAP, Hex Hd, M5.5 x 15, M5,5 x 15
19	895-11010	2	WASHER, M10 x 20 x 2, 11 x 20 x 2 mm
20	394013A1	1	FASTENER,

MX285 CASE IH MAGNUM TRACTOR (NORTH AMERICA)

09-23 CAB - HEADLINER, DELUXE AND LUXURY TRIM

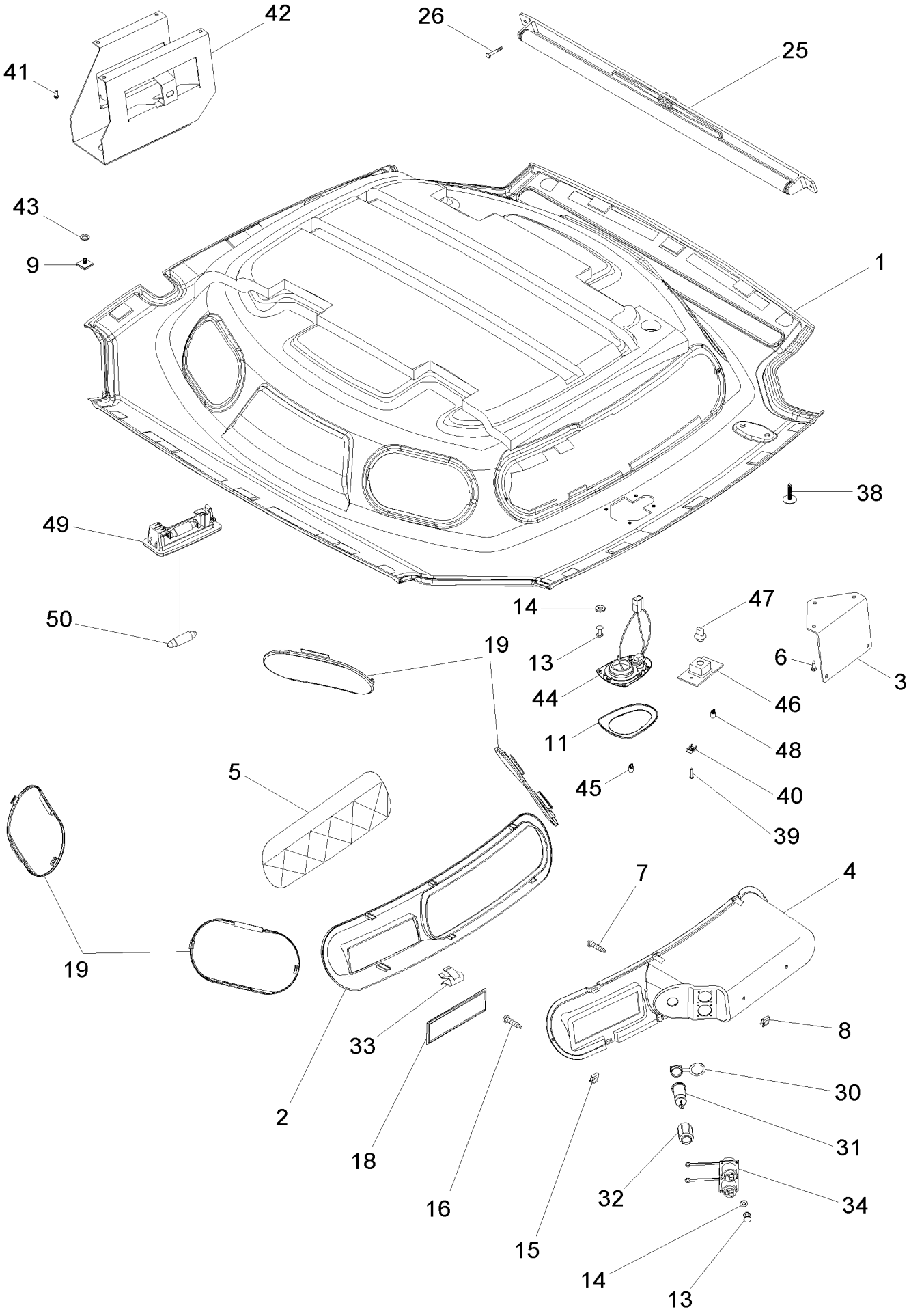

MX285 CASE IH MAGNUM TRACTOR (NORTH AMERICA)

09-23 CAB - HEADLINER, DELUXE AND LUXURY TRIM

ссылка	Номер детали	Кол-во	Описание
1	400829A2	1	LINING, ROOF,
2	358794A2	1	BEZEL,
3	409205A2	1	BRACKET,
	358795A1	1	BOX, Inc. 4, 5
4	358797A1	1	BOX,
5	358798A1	1	RETAINER,
6	758-5	8	SCREW, SELF TAP, Hex Hd, M5.5 x 15, M5,5 x 15
7	761-17325	2	SCREW, SELF TAP, Pan Hd, M4.2 x 25, M4,2 x 25
8	322072A2	2	FASTENER,
9	409206A1	12	FASTENER,
11	360364A1	1	BEZEL,
13	151-535	12	RIVET, Pop, 1/8" x .462", Pop, 1/8 x 15/32 inch
14	895-11003	12	WASHER, M3, 3,2 x 7 x 0,5 mm
15	442245A1	2	NUT,
16	104033C2	2	SCREW, SELF TAP, Cross Wash Hd, M4.8 x 19, Coated, No. 10 x 3/4
18	1535219C1	1	COVER, Without Radio
19	358683A1	4	GRILLE, Speaker Cover
25	315459A2	1	VISOR, SUN, , BSN JAZ132959
25	87425480	1	VISOR, SUN, , ASN JAZ132959
26	780-14625	2	SCREW, SELF TAP, Hex Hd, M6.3 x 25, M3 X 25
30	190812A1	1	COVER,
31	308904A1	1	LIGHTER, CIGARETTE, Outlet
32	308905A1	1	LIGHTER, CIGARETTE,
33	308538A2	6	CLIP,
34	227739A2	2	CONNECTOR, ELEC,
38	333772A1	2	PLUG,
39	760-17316	2	SCREW, SELF TAP, Pan Hd, M4.2 x 16, M4,2 x 16
40	442244A1	2	NUT,
41	151-537	4	RIVET, Pop, 1/8" x .650", Pop, 1/8 x 5/8
42	428264A4	1	BRACKET,
43	895-11010	2	WASHER, M10 x 20 x 2, 11 x 20 x 2 mm
44	372892A1	1	LAMP, Inc.45
45	373114A1	1	BULB,
46	368143A1	1	LAMP, Inc. 47, 48
47	107329C1	1	CABLE ASSY.,
48	D71346	1	LAMP, TAIL,
49	1983391C1	1	LAMP, Inc. 50
50	E35556	1	BULB,

MX285 CASE IH MAGNUM TRACTOR (NORTH AMERICA)

09-24 CAB - FLOOR MAT AND INSULATION

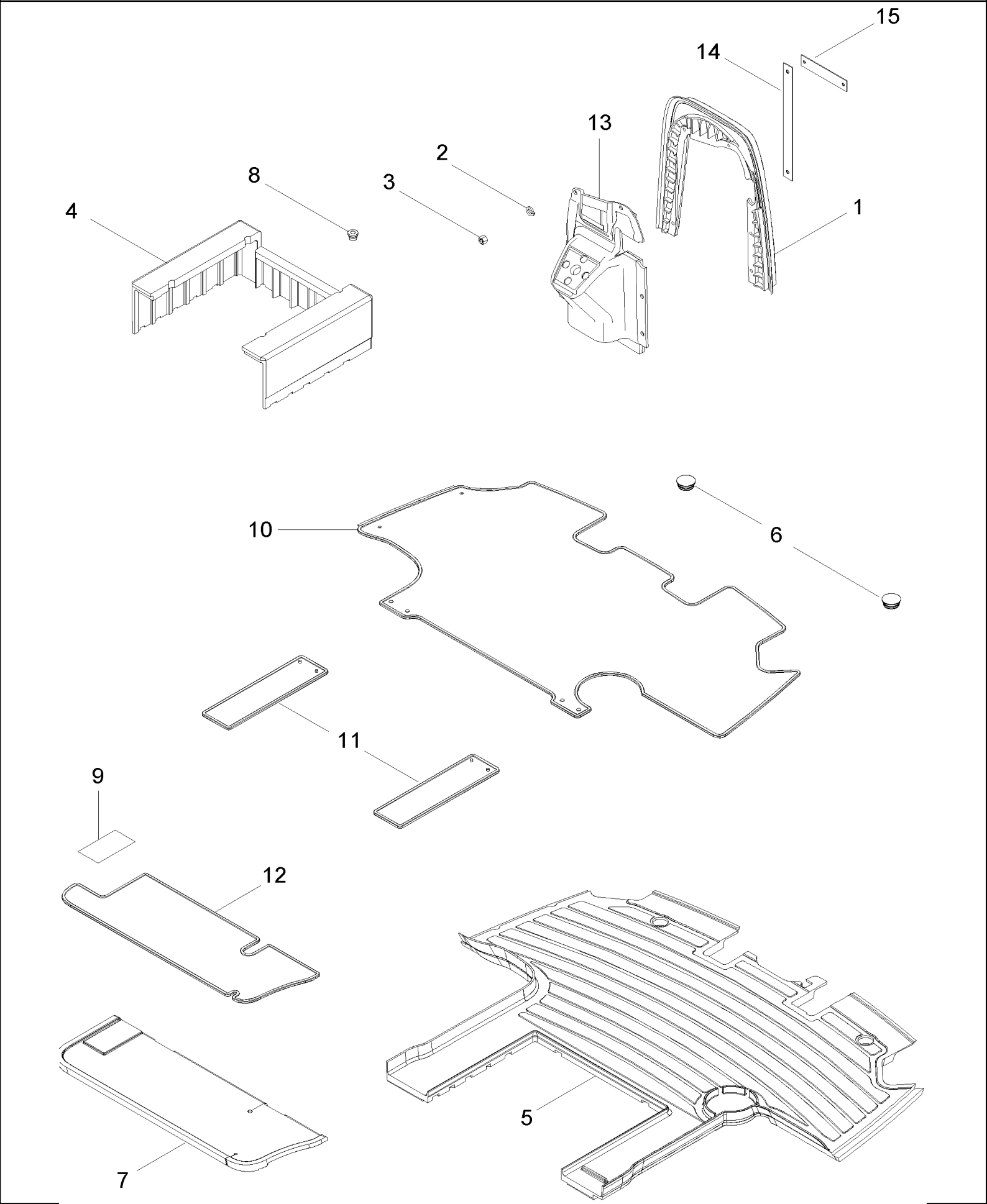

MX285 CASE IH MAGNUM TRACTOR (NORTH AMERICA)

09-24 CAB - FLOOR MAT AND INSULATION

ссылка	Номер детали	Кол-во	Описание
1	446822A2	1	PARTITION, Firewall, Outer
2	895-25008	5	WASHER, M8 x 20 x 1.6, 9 x 24 x 2 mm
3	832-10408	5	NUT, M8 x 1.25, Cl 8, M8; 8
4	254325A3	1	SKIRT,
5	297008A4	1	MAT, FLOOR, Inc. 6, Standard Cab, Deluxe Cab
5	357830A1	1	MAT, FLOOR, Inc. 6, Luxury Cab
6	281848A1	2	PLUG, , Standard Cab, Deluxe Cab
6	357829A1	1	PLUG, , Luxury Cab
7	258055A4	1	COVER, Shelf, ASN JAZ132614
7	87442168	1	COVER, Shelf, BSN JAZ132614
8	182220A1	1	GROMMET, If Equipped
9	297980A1	1	DECAL,
	360437A1	1	CARPET, Inc. 10 - 12, Luxury Cab
10	357072A1	1	CARPET, Front, Luxury Cab
11	357074A1	2	CARPET, Side, Luxury Cab
12	357075A1	1	CARPET, Shelf, Luxury Cab
13	446820A2	1	PARTITION, Firewall, Inner
14	446823A1	1	STRAP,
15	446824A2	1	STRAP,

MX285 CASE IH MAGNUM TRACTOR (NORTH AMERICA)

09-25 CAB - TRIM, FENDERS

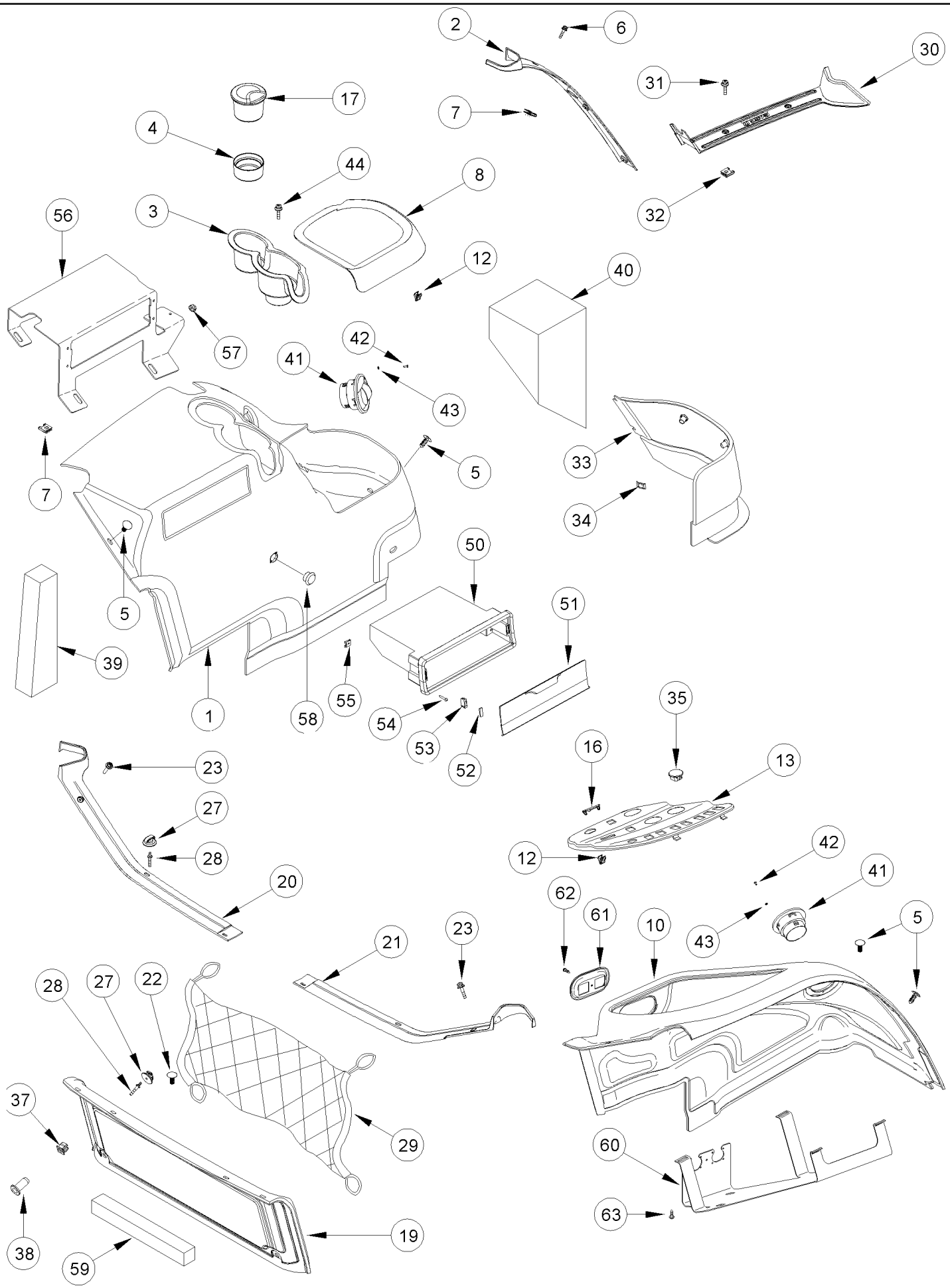

MX285 CASE IH MAGNUM TRACTOR (NORTH AMERICA)

09-25 CAB - TRIM, FENDERS

ссылка	Номер детали	Кол-во	Описание
1	426575A1	1	TRIM PANEL, Left Hand, Inc. 41, Without CD Player
1	426576A1	1	TRIM PANEL, Left Hand, Inc. 41, With CD Player
2	358235A1	1	TRIM PANEL,
3	358805A1	1	HOLDER,
4	301901A1	1	INSERT,
5	93199C1	15	FASTENER,
6	360362A1	3	SCREW, No. 10 x 1
7	131-832	4	NUT, U, #10-16, Panel type,
8	358806A1	1	COVER,
10	405012A1	1	TRIM PANEL, Right Hand, Inc. 41, BSN JAZ132383
10	87444946	1	TRIM PANEL, Right Hand, ASN JAZ132383
12	278316A2	6	CLIP,
13	409304A2	1	PANEL, , Without Auto Temp Control
13	405010A2	1	PANEL, , With Auto Temp Control
16	302118A1	1	COVER, , Without Auto Temp Control
17	302456A1	1	ASH TRAY,
19	426580A1	1	TRIM PANEL, Rear
20	357169A2	1	TRIM PANEL, Left Hand
21	357168A2	1	TRIM PANEL, Right Hand
22	93199C1	2	FASTENER,
23	360362A1	2	SCREW, No. 10 x 1
27	359037A1	4	HOOK,
28	322413A2	4	STUD,
29	359036A1	1	RETAINER,
30	358807A1	1	SILL,
31	360362A1	2	SCREW, No. 10 x 1
32	131-839	2	NUT, U, #10-16, Panel type,
33	358682A1	1	COVER,
34	333773A1	3	NUT,
35	280628A1	1	PLUG, , Without Power Mirrors
37	322072A2	2	FASTENER,
38	322073A1	2	NUT,
39	336383A1	1	PAD,
40	336385A1	1	PAD,
41	360365A1	2	DIFFUSER, , BSN JAZ132383
41	360365A1	1	DIFFUSER, , ASN JAZ132383
42	151-535	8	RIVET, Pop, 1/8" x .462", Pop, 1/8 x 15/32 inch
43	895-11003	8	WASHER, M3, 3,2 x 7 x 0,5 mm
44	104033C2	1	SCREW, SELF TAP, Cross Wash Hd, M4.8 x 19, Coated, No. 10 x 3/4
50	355101A2	1	BOX, , With CD Player
51	355102A2	1	DOOR,
52	364279A1	2	PLATE,
53	364281A1	2	CATCH,
54	260-16516	4	SCREW, SELF TAP, Cross Pan Hd, #10 x 1", No. 10 x 1
55	96900C1	4	NUT, U, #10-16, Panel type, No. 10

MX285 CASE IH MAGNUM TRACTOR (NORTH AMERICA)

09-25 CAB - TRIM, FENDERS

ссылка	Номер детали	Кол-во	Описание
56	86991719	1	BRACKET,
57	825-2408	7	NUT, M8 x 1.25, Flg, Cl 8,
58	353-411	1	PLUG, Dome, 1.000" hole, Nylon, 1 in dia
59	86984858	1	FOAM,
60	405011A3	1	BRACKET,
61	428192A2	1	BEZEL,
62	760-17113	8	SCREW, SELF TAP, Pan Hd, M3.5 x 13, M3,5 x 13
63	760-17316	1	SCREW, SELF TAP, Pan Hd, M4.2 x 16, M4,2 x 16

MX285 CASE IH MAGNUM TRACTOR (NORTH AMERICA)

09-26 CAB - TRIM, CAB POSTS

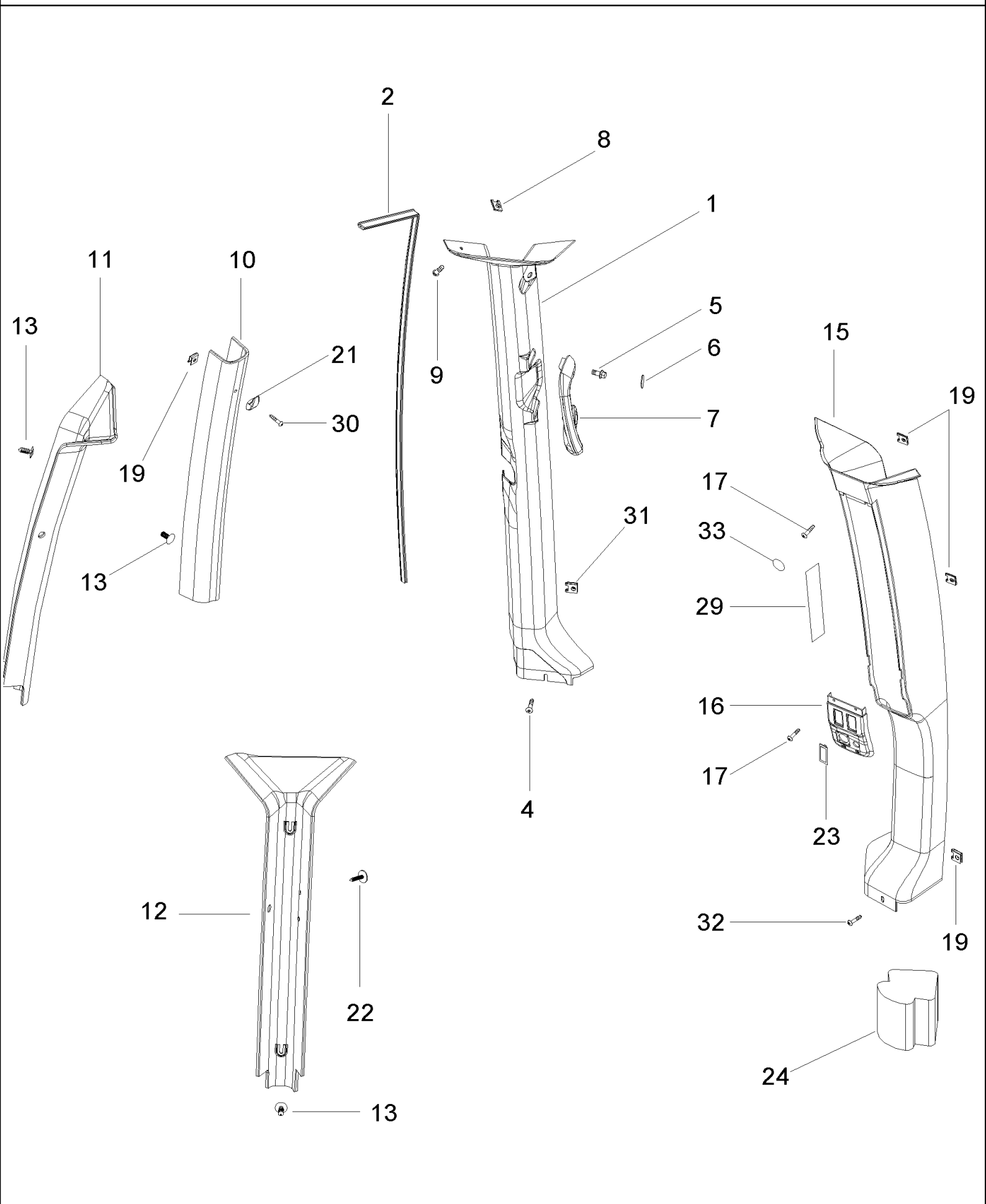

MX285 CASE IH MAGNUM TRACTOR (NORTH AMERICA)

09-26 CAB - TRIM, CAB POSTS

ссылка	Номер детали	Кол-во	Описание
1	358802A1	1	COVER, Left Hand, Front
2	378041A3	1	STRIP, Upper
4	104033C2	1	SCREW, SELF TAP, Cross Wash Hd, M4.8 x 19, Coated, No. 10 x 3/4
5	781-24613	2	SCREW, SELF TAP, Hex Flg Hd, M6 x 13, M6 x 13
6	359035A1	1	PLUG,
7	359034A1	1	HANDLE,
8	131-839	1	NUT, U, #10-16, Panel type,
9	360362A1	1	SCREW, No. 10 x 1
10	355100A1	1	COVER, Left Hand, Middle
11	355099A1	1	TRIM PANEL, Left Hand, Rear
12	355098A1	1	TRIM PANEL, Right Hand, Rear
13	93199C1	5	FASTENER,
15	444547A1	1	TRIM PANEL, Right Hand, Front
16	358804A1	1	BEZEL,
17	260-16516	7	SCREW, SELF TAP, Cross Pan Hd, #10 x 1", No. 10 x 1
19	177269A1	9	NUT,
21	3234176R1	1	COAT HOOK,
22	333772A1	2	PLUG,
23	245918C1	2	CAP,
24	336384A1	1	PAD,
29	360322A1	2	TAPE, ADHESIVE, 305 mm, Cut From 1987208C2
30	761-17325	1	SCREW, SELF TAP, Pan Hd, M4.2 x 25, M4,2 x 25
31	131-832	1	NUT, U, #10-16, Panel type,
32	1975782C1	1	SCREW, SELF TAP, Cross Truss Wash Hd, #10 x 5/8",
33	376597A2	2	COVER,

MX285 CASE IH MAGNUM TRACTOR (NORTH AMERICA)

09-27 CAB - INSTRUMENT PANEL

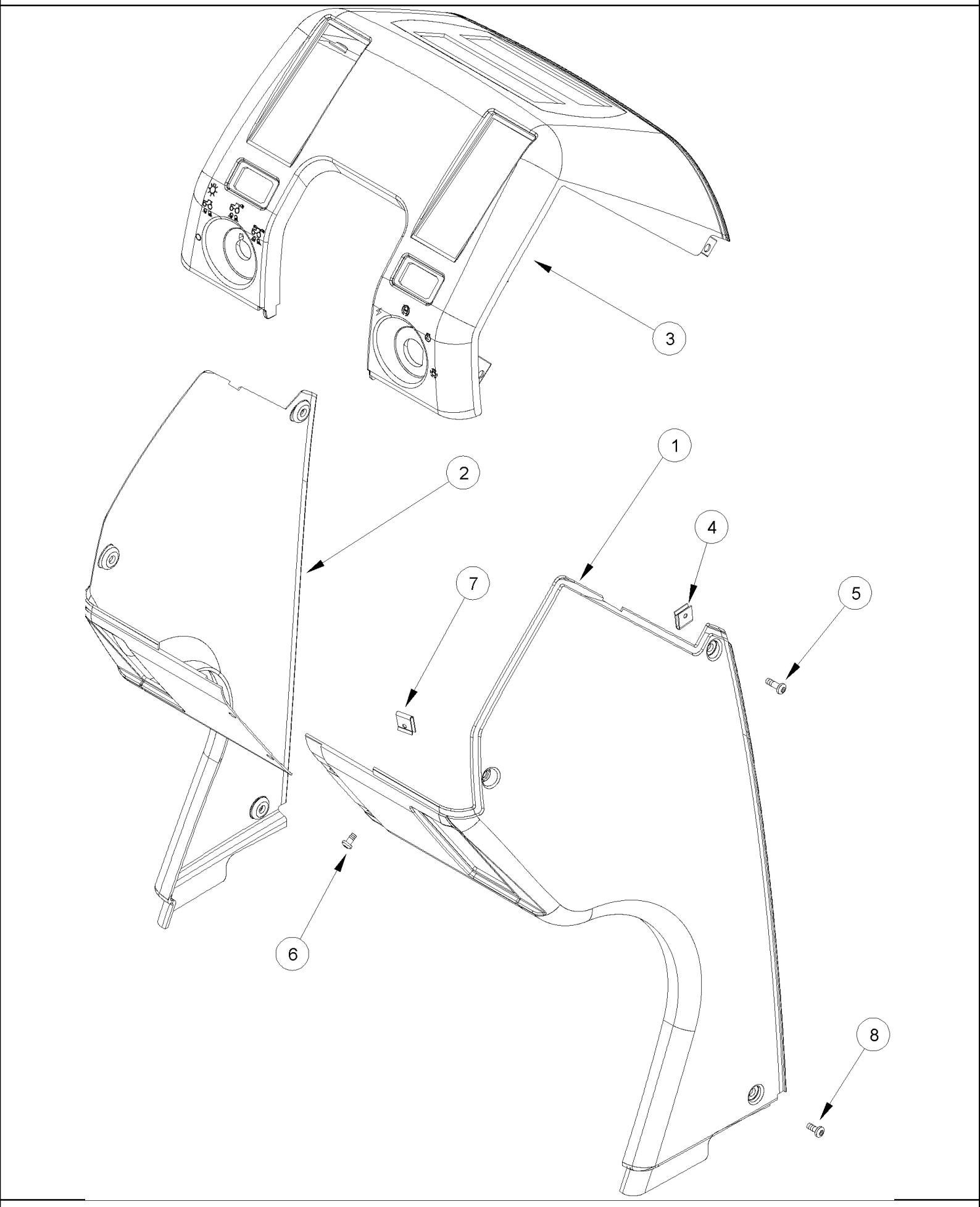

MX285 CASE IH MAGNUM TRACTOR (NORTH AMERICA)

09-27 CAB - INSTRUMENT PANEL

сылка	Номер детали	Кол-во	Описание
1	358671A1	1	COVER, Right Hand
2	358670A1	1	COVER, Left Hand
3	358672A1	1	COVER, Top
4	131-839	4	NUT, U, #10-16, Panel type,
5	360362A1	4	SCREW, No. 10 x 1
6	360363A1	2	SCREW,
7	131-832	2	NUT, U, #10-16, Panel type,
8	362394A1	2	SCREW,

09-28 SEAT ASSEMBLY

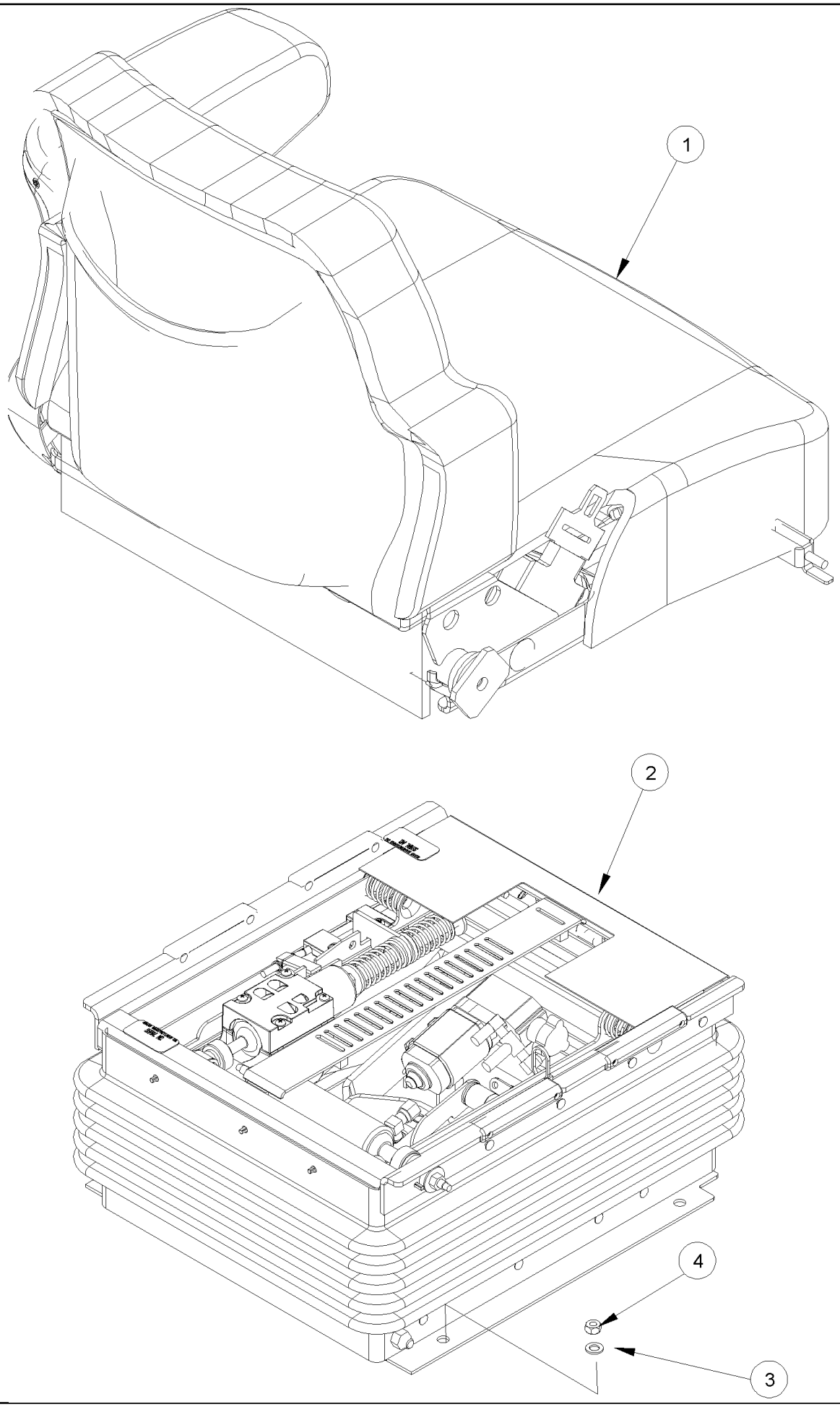

Seats With Air Suspension Control Switch Located On Suspension Assembly

MX285 CASE IH MAGNUM TRACTOR (NORTH AMERICA)

09-28 SEAT ASSEMBLY

ссылка	Номер детали	Кол-во	Описание
	358202A2	1	SEAT ASSY., Cloth Without Heat And Positive Response Suspension, Inc. 1, 2
	397519A1	1	SEAT ASSY., Cloth With Heat Without Positive Response Suspension, Inc. 1, 2
	403213A1	1	SEAT ASSY., Cloth With Heat And Positive Response Suspension, Inc.1, 2
	400163A1	1	SEAT ASSY., Leather With Heat And Positive Response Suspension, Inc. 1, 2
1	360319A2	1	CUSHION ASSY., Cloth, Without Heat, See Figure 09-29
1	397525A1	1	CUSHION ASSY., Cloth, With Heat, See Figure 09-29
1	400179A1	1	CUSHION ASSY., Leather, With Heat, See Figure 09-29
2	374353A2	1	PACKAGE,SERVICE, Suspension, Without Positive Response Suspension, See Figure 09-30
2	400184A1	1	KIT, Suspension, With Positive Response Suspension, See Figure 09-31
4	825-2408	4	NUT, M8 x 1.25, Flg, Cl 8,

Seats With Air Suspension Control Switch Located On Suspension Assembly

09-28A SEAT ASSEMBLY

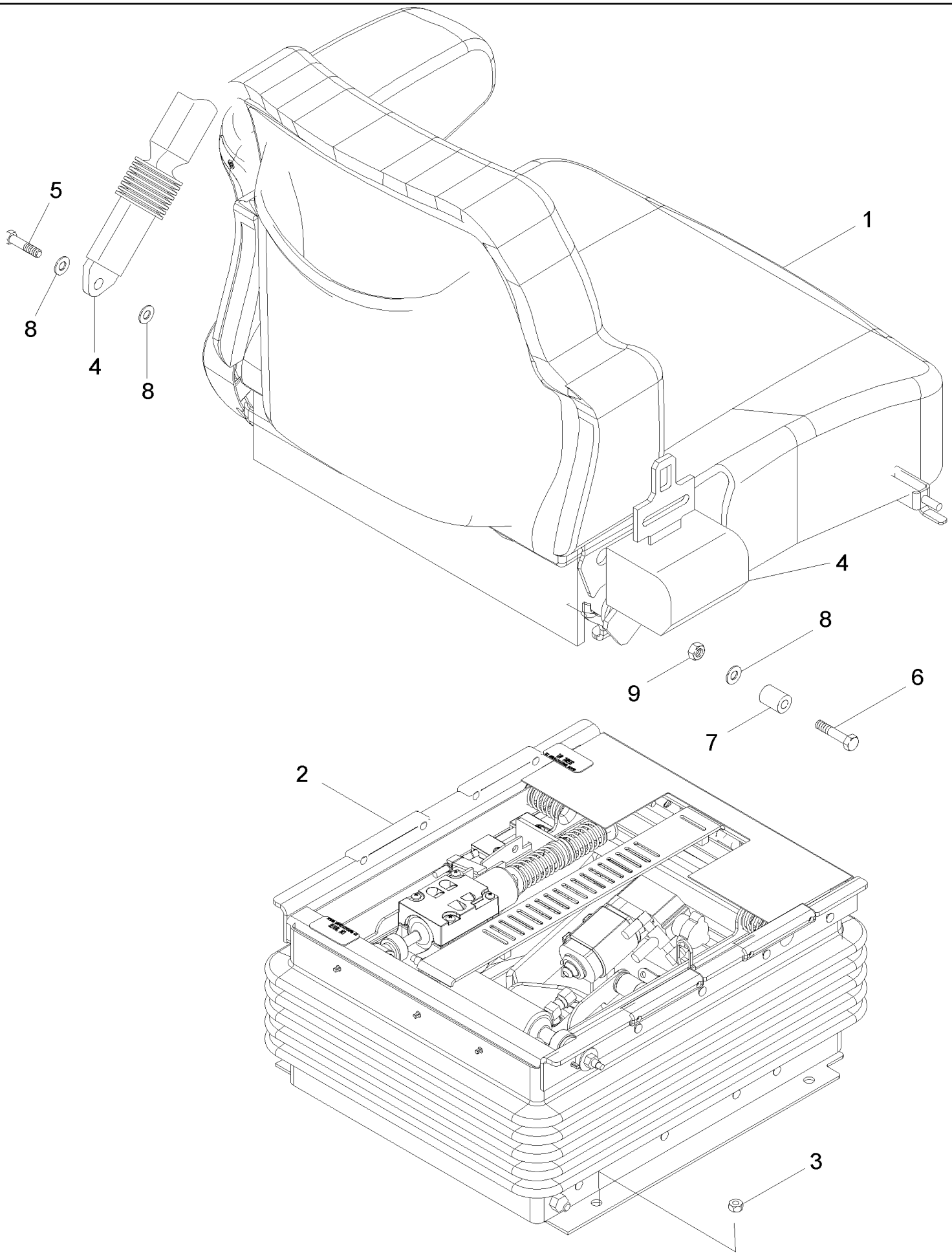

Seats With Air Suspension Control Switch Located In Armrest

MX285 CASE IH MAGNUM TRACTOR (NORTH AMERICA)

09-28A SEAT ASSEMBLY

ссылка	Номер детали	Кол-во	Описание
	87453068	1	SEAT ASSY., Cloth Without Heat And Positive Response Suspension, Inc. 1, 2
	87453069	1	SEAT ASSY., Cloth With Heat Without Positive Response Suspension, Inc. 1, 2
	87453071	1	SEAT ASSY., Cloth With Heat And Positive Response Suspension, Inc.1, 2
1	87347872	1	SEAT, BACK, Cloth, Without Heat, See Figure 09-29A
1	87347873	1	SEAT, BACK, Cloth, With Heat, See Figure 09-29A
2	87347885	1	KIT, SERVICE, Suspension, Without Positive Response Suspension, See Figure 09-30A
2	87347886	1	SUSPENSION, With Positive Response Suspension, See Figure 09-31A
3	825-2408	4	NUT, M8 x 1.25, Flg, Cl 8,
4	444877A1	1	SEAT BELT,
5	806-12030	1	BOLT, Hex, Lock, M12 x 30, Cl 10.9,
6	806-12040	1	BOLT, Hex, Lock, M12 x 40, Cl 10.9,
7	87313413	1	TUBE SPACER,
8	896-11012	3	WASHER, M13.5 x 24.5 x 3, HT,
9	829-1312	1	NUT, M12 x 1.75, Cl 10,

Seats With Air Suspension Control Switch Located In Armrest

MX285 CASE IH MAGNUM TRACTOR (NORTH AMERICA)

09-29 CUSHION ASSEMBLY - SEAT

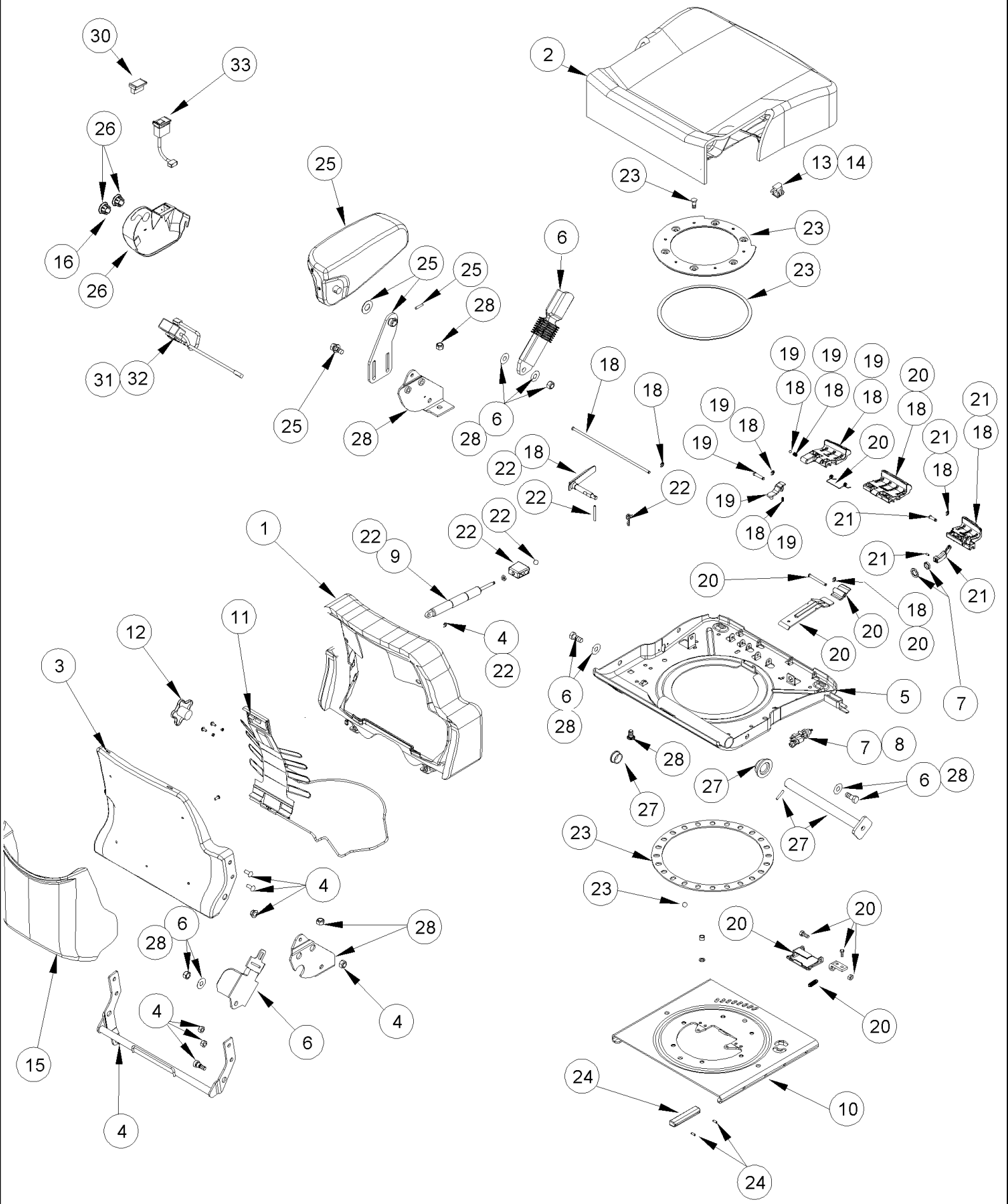

Seats With Air Suspension Control Switch Located On Suspension Assembly

MX285 CASE IH MAGNUM TRACTOR (NORTH AMERICA)

09-29 CUSHION ASSEMBLY - SEAT

ссылка	Номер детали	Кол-во	Описание
	360319A2	1	CUSHION ASSY., Cloth Without Heat, Inc. 1 - 30
	397525A1	1	CUSHION ASSY., Cloth With Heat, Inc. 1 - 33
	400179A1	1	CUSHION ASSY., Leather With Heat, Inc. 1 - 33
1	360329A1	1	BACKREST, Cloth Without Heat
1	87407044	1	BACKREST, Cloth With Heat
1	87407042	1	BACKREST, Leather With Heat
2	360328A2	1	CUSHION ASSY., Cloth Without Heat
2	87407045	1	CUSHION ASSY., Cloth With Heat
2	87407043	1	CUSHION ASSY., Leather With Heat
3	302005A1	1	PANEL, Backrest, Cloth
3	375198A1	1	BACKREST, Backrest, Leather
4	359959A1	1	TUBE, Torque Tube
5	375225A1	1	PAN, Seat
6	333657A2	1	BELT, SAFETY,
7	1981852C3	1	SWITCH, Air Control, Inc. 8
8	1987186C2	1	KNOB,
9	302004A2	1	SHOCK ABSORBER, Gas Strut
10	302001A1	1	PLATE, Swivel
11	333104A2	1	SUPPORT, Lumbar, Inc. 12
12	374387A1	1	PACKAGE,SERVICE, Lumbar
13	333107A1	1	SWITCH, Operators Presence
14	302011A1	1	HARNESS, Operator Presence, Without Heat
14	87407046	1	HARNESS, Operator Presence, With Heat
15	333108A2	1	CASE, Operators Manual, Cloth
15	374388A1	1	PACKAGE,SERVICE, Operators Manual, Leather
16	374361A1	1	BLANK-OFF PLUG,
18	373463A1	1	PACKAGE,SERVICE, Seat Knob
19	373464A1	1	PACKAGE,SERVICE, Swivel Control
20	373465A1	1	PACKAGE,SERVICE, Slide Control
21	373466A1	1	PACKAGE,SERVICE, Height Control
22	373467A2	1	PACKAGE,SERVICE, Recliner Control
23	391414A1	1	PACKAGE,SERVICE, Swivel
24	302016A1	1	PACKAGE,SERVICE, Slide Pucks
25	361044A1	1	PACKAGE,SERVICE, Armrest, Left Hand, Cloth
25	373468A1	1	PACKAGE,SERVICE, Armrest, Left Hand, Leather
26	374386A1	1	PACKAGE,SERVICE, Heater Switch Cover
27	359951A1	1	PACKAGE,SERVICE, Console Mount
28	359950A1	1	PACKAGE,SERVICE, Side Brackets
29	373462A2	1	PACKAGE,SERVICE, Jam Nut
30	375200A1	1	PLUG,
	87407039	1	HARNESS, Heater, Inc. 31
31	87407048	1	SWITCH, Switch
32	381201A1	1	HARNESS, Resitor Kit, Heater
33	381151A1	1	SWITCH, Heater

Seats With Air Suspension Control Switch Located On Suspension Assembly

MX285 CASE IH MAGNUM TRACTOR (NORTH AMERICA)

09-29A CUSHION ASSEMBLY - SEAT

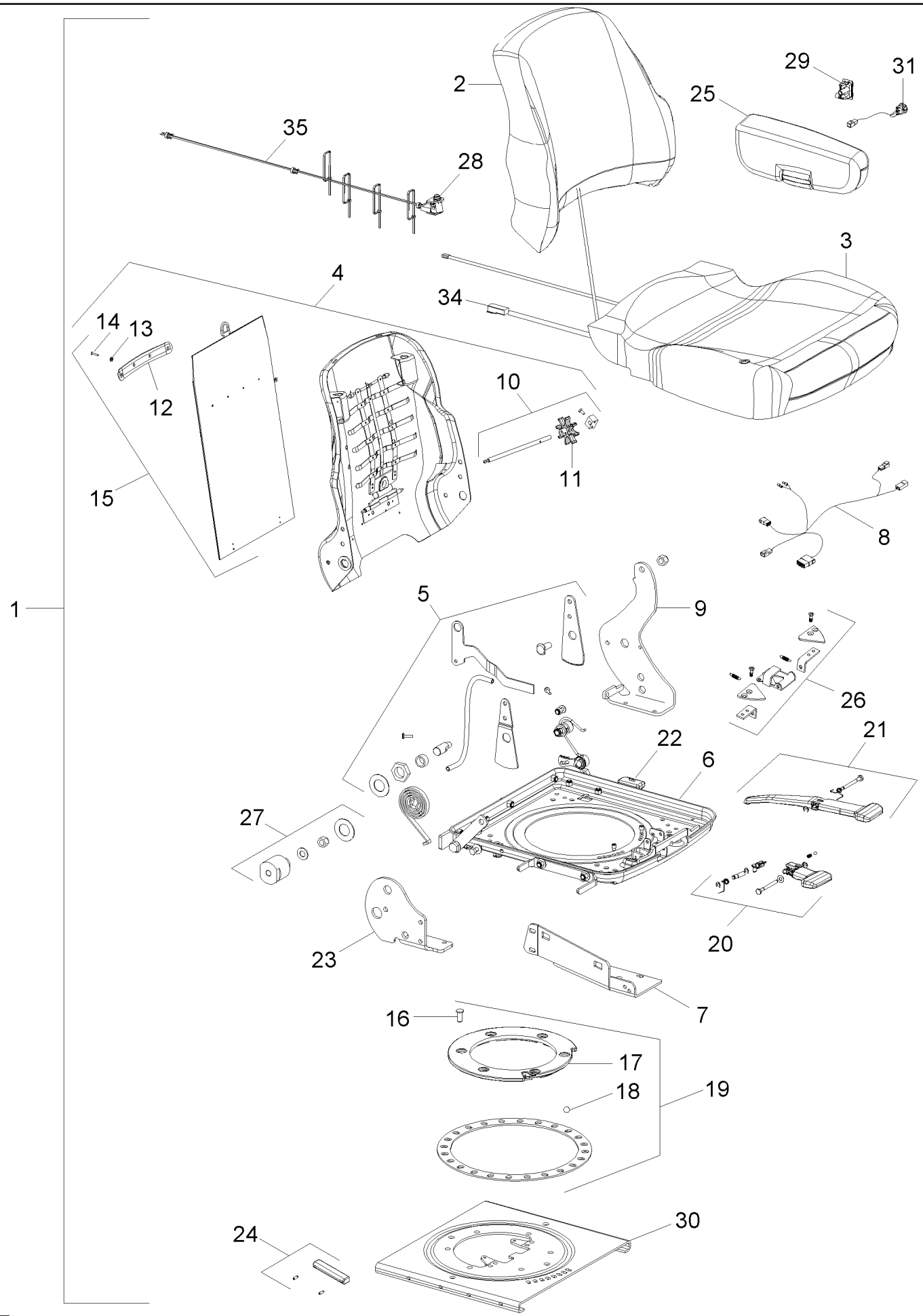

Seats With Air Suspension Control Switch Located In Armrest

MX285 CASE IH MAGNUM TRACTOR (NORTH AMERICA)

09-29A CUSHION ASSEMBLY - SEAT

ссылка	Номер детали	Кол-во	Описание
1	87347872	1	SEAT, BACK, Cloth Without Heat, Inc. 1 - 30, 34, 35
1	87347873	1	SEAT, BACK, Cloth With Heat, Inc. 1 - 35
2	373476A1	1	CUSHION, Cloth Without Heat
2	87347895	1	SEAT, BACK, Cloth With Heat
3	87347893	1	CUSHION, SEAT, Cloth Without Heat
3	87347894	1	CUSHION, SEAT, Cloth With Heat
4	86994155	1	ASSEMBLY, Backrest, Cloth, Inc. 10, 15
5	86994165	1	SEAT ACCESSORY, Recliner Kit, Inc. 22
6	NSS	1	NOT SERVICED SEPARATELY, PAN, Seat
7	86994157	1	BRACKET, Console Mount, Front
8	87347944	1	KIT, SERVICE, HARNESS, Seat and Suspension
9	NSS	1	NOT SERVICED SEPARATELY, BRACKET
10	87308130	1	SEAT BACK ADJUST. DEVICE, Lumbar
11	87037462	1	SEAT BACK ADJUST. DEVICE, Lumbar
12	NSS	1	NOT SERVICED SEPARATELY, SUPPORT, Manual Holder
13	NSS	4	NOT SERVICED SEPARATELY, WASHER, 1/8 x 23/64 x 3/64
14	NSS	4	NOT SERVICED SEPARATELY, RIVET, Pop, 1/8
15	86994172	1	KIT, SERVICE, Operators Manual, Cloth, Inc. 12, 13, 14
16	NSS	6	NOT SERVICED SEPARATELY, BOLT, Swivel Retainer
17	NSS	1	NOT SERVICED SEPARATELY, RETAINER, Swivel
18	NSS	24	NOT SERVICED SEPARATELY, BALL, 1/2
19	87347936	1	KIT, SERVICE, Swivel, Inc. 16, 17,18
20	87347942	1	KIT, SERVICE, Swivel Control
21	87347941	1	KIT, SERVICE, Slide Control
22	87416475	1	KNOB, Recliner Control
23	NSS	1	NOT SERVICED SEPARATELY, BRACKET
24	302016A1	1	PACKAGE,SERVICE, Slide Pucks
25	87347939	1	KIT, SERVICE, Armrest, Left Hand, Cloth Without Heat
25	86994250	1	ASSEMBLY, Armrest, Left Hand, Cloth With Heat
26	87347934	1	LATCH, Slide
27	87396230	1	BUSHING, KIT,Console
28	87300397	1	SWITCH, Operator's Presence
29	87347940	1	KIT, SERVICE, Air Control
30	87347956	1	KIT, SERVICE, Swivel
31	87407048	1	SWITCH, Heater
34	NSS	1	NOT SERVICED SEPARATELY, HARNESS
35	NSS	1	NOT SERVICED SEPARATELY, HARNESS

Seats With Air Suspension Control Switch Located In Armrest

MX285 CASE IH MAGNUM TRACTOR (NORTH AMERICA)

09-30 SUSPENSION ASSEMBLY - SEAT

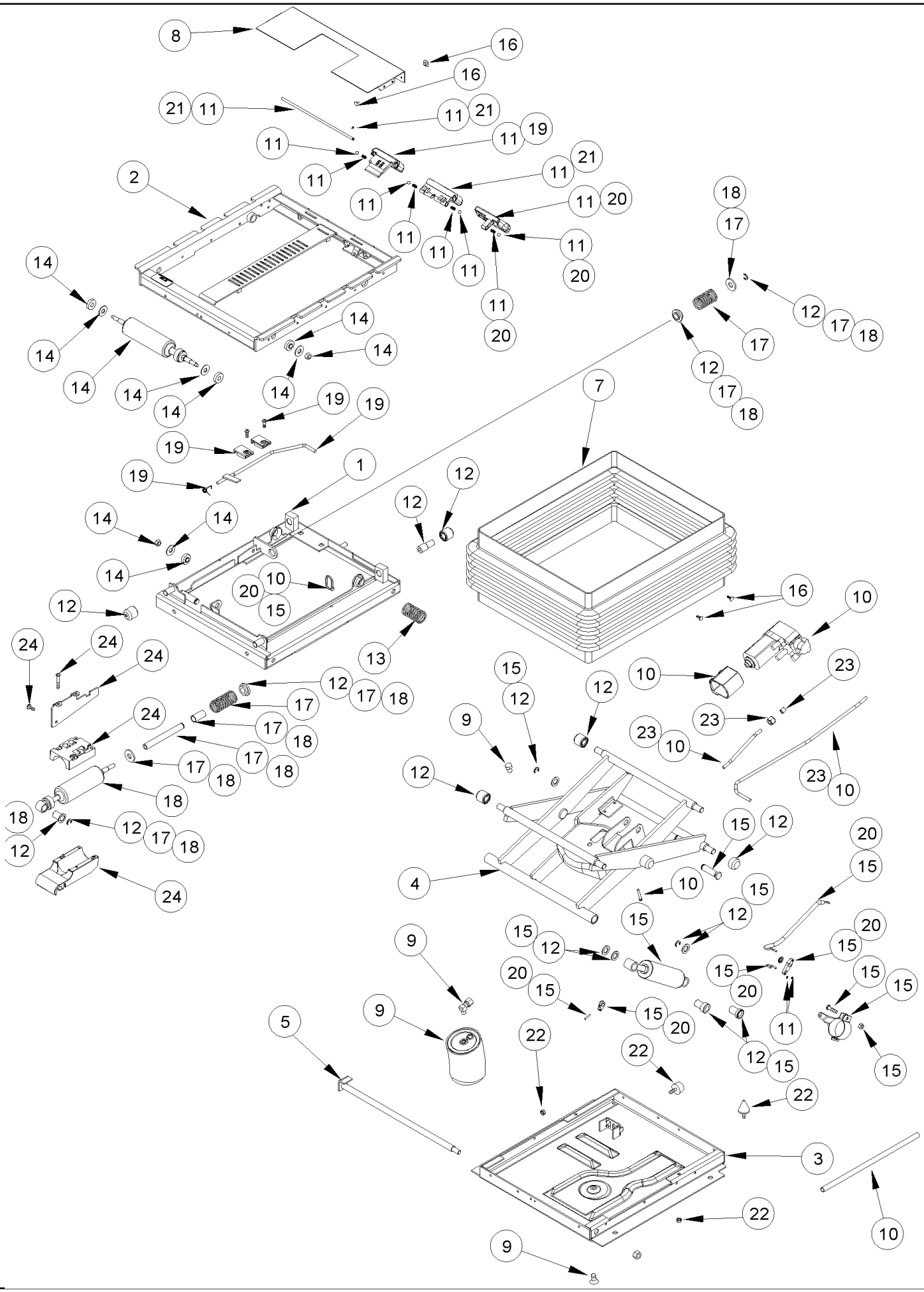

Seats With Air Suspension Control Switch Located On Suspension Assembly

MX285 CASE IH MAGNUM TRACTOR (NORTH AMERICA)

09-30 SUSPENSION ASSEMBLY - SEAT

ссылка	Номер детали	Кол-во	Описание
	374353A2	1	PACKAGE,SERVICE, Inc. 1 - 25
1	333273A1	1	HOUSING, Upper
2	333274A1	1	ISOLATOR,
3	333275A1	1	HOUSING, Lower
4	333276A1	1	ARM,
5	302033A1	1	SHAFT,
6	302027A1	1	HARNESS, Not Shown
7	333278A1	1	BOOT,
8	302029A2	1	PLATE,
9	333279A1	1	PACKAGE,SERVICE, Air Spring
10	333280A1	1	PACKAGE,SERVICE, Air Compressor
11	373469A1	1	PACKAGE,SERVICE, Suspension Knob
12	333283A2	1	PACKAGE,SERVICE, Suspension Bearing And Rollers
13	333284A1	1	PACKAGE,SERVICE, Lateral Isolator Spring
14	333285A1	1	PACKAGE,SERVICE, Lateral Isolator Shock Absorber
15	333286A1	1	PACKAGE,SERVICE, Suspension Shock Absorber
16	333659A1	1	PACKAGE,SERVICE, Boot Pin
17	333287A2	1	PACKAGE,SERVICE, Fore And Aft Isolator Spring
18	333288A2	1	PACKAGE,SERVICE, Fore And Aft Shock Absorber
19	373470A2	1	PACKAGE,SERVICE, Fore And Aft Isolator Control
20	373472A1	1	PACKAGE,SERVICE, Suspension Shock Absorber Control
21	373473A1	1	PACKAGE,SERVICE, Lateral Isolator Control
22	333295A1	1	PACKAGE,SERVICE, Suspension Bumper
23	333660A1	1	PACKAGE,SERVICE, Tube And Fitting
24	333296A1	1	PACKAGE,SERVICE, Fore And Aft Isolator Shock Block
25	374359A1	1	PACKAGE,SERVICE, Suspension Shock Cable

Seats With Air Suspension Control Switch Located On Suspension Assembly

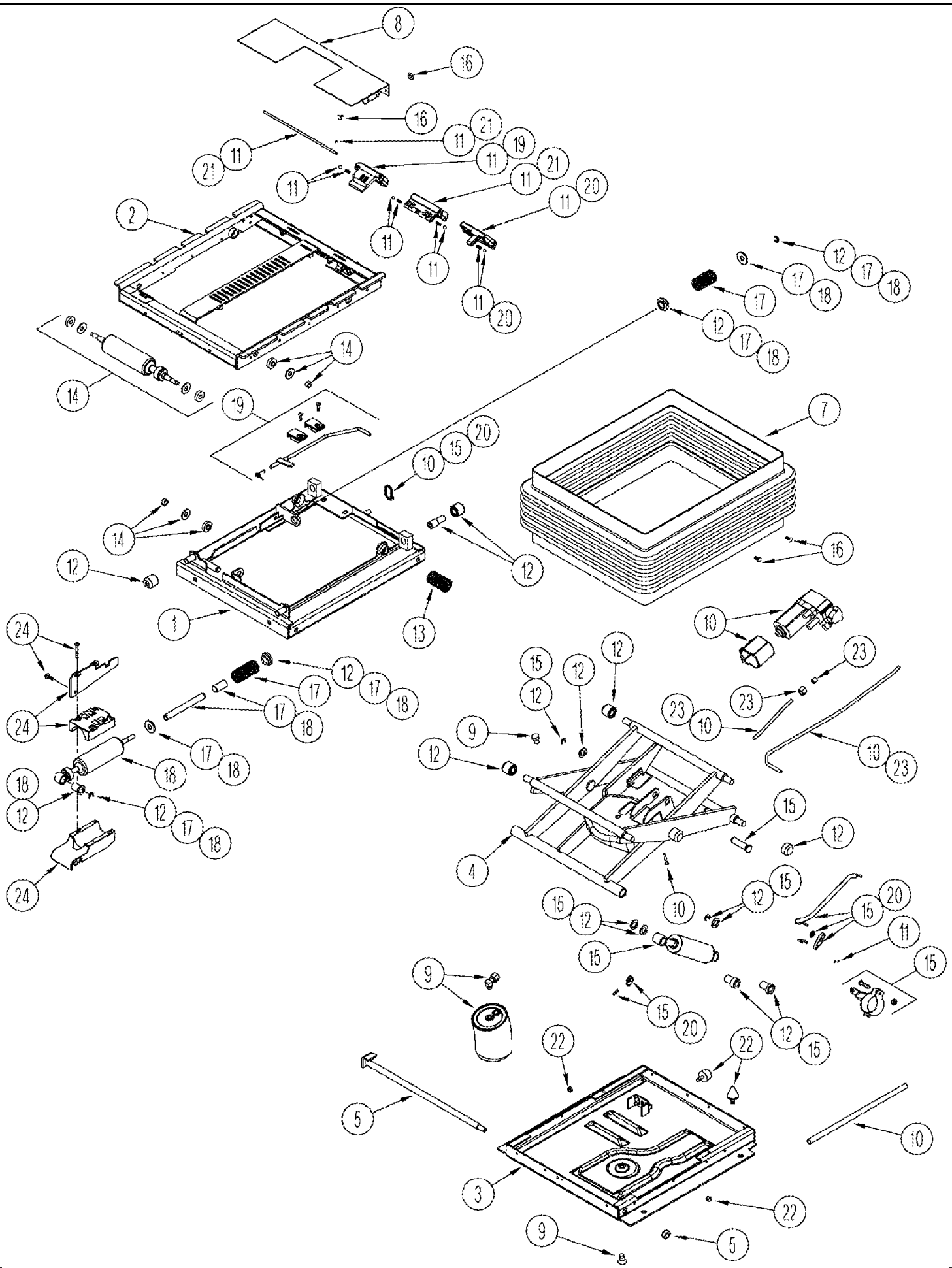

Seats With Air Suspension Control Switch Located In Armrest

MX285 CASE IH MAGNUM TRACTOR (NORTH AMERICA)

09-30A SUSPENSION ASSEMBLY - SEAT

ссылка	Номер детали	Кол-во	Описание
	87347885	1	KIT, SERVICE, Inc. 1 - 24
1	NSS	1	NOT SERVICED SEPARATELY, HOUSING, Upper
2	333274A1	1	ISOLATOR, Lateral Track
3	333275A1	1	HOUSING, Lower
4	333276A1	1	ARM,
5	302033A1	1	SHAFT,
6	87347944	1	KIT, SERVICE, Harness, Suspension, Not Shown, See Figure 09-29A
7	87347943	1	KIT, SERVICE, BOOT, Suspension
8	302029A2	1	PLATE,
9	333279A2	1	KIT, Air Spring
10	87347951	1	KIT, SERVICE, Air Compressor
11	373469A1	1	PACKAGE,SERVICE, Suspension Knob
12	333283A2	1	PACKAGE,SERVICE, Suspension Bearing And Rollers
13	333284A1	1	PACKAGE,SERVICE, Lateral Isolator Spring
14	333285A1	1	PACKAGE,SERVICE, Lateral Isolator Shock Absorber
15	87347950	1	SUSPENSION, Suspension Shock Absorber
16	333659A1	1	PACKAGE,SERVICE, Boot Pin
17	333287A2	1	PACKAGE,SERVICE, Fore And Aft Isolator Spring
18	333288A2	1	PACKAGE,SERVICE, Fore And Aft Shock Absorber
19	373470A2	1	PACKAGE,SERVICE, Fore And Aft Isolator Control
20	447956A1	1	PACKAGE,SERVICE, Suspension Shock Absorber Control
21	373473A1	1	PACKAGE,SERVICE, Lateral Isolator Control
22	333295A1	1	PACKAGE,SERVICE, Suspension Bumper
23	87347955	1	CABLE, Suspension Shock
24	333296A1	1	PACKAGE,SERVICE, Fore And Aft Isolator Shock Block

Seats With Air Suspension Control Switch Located In Armrest

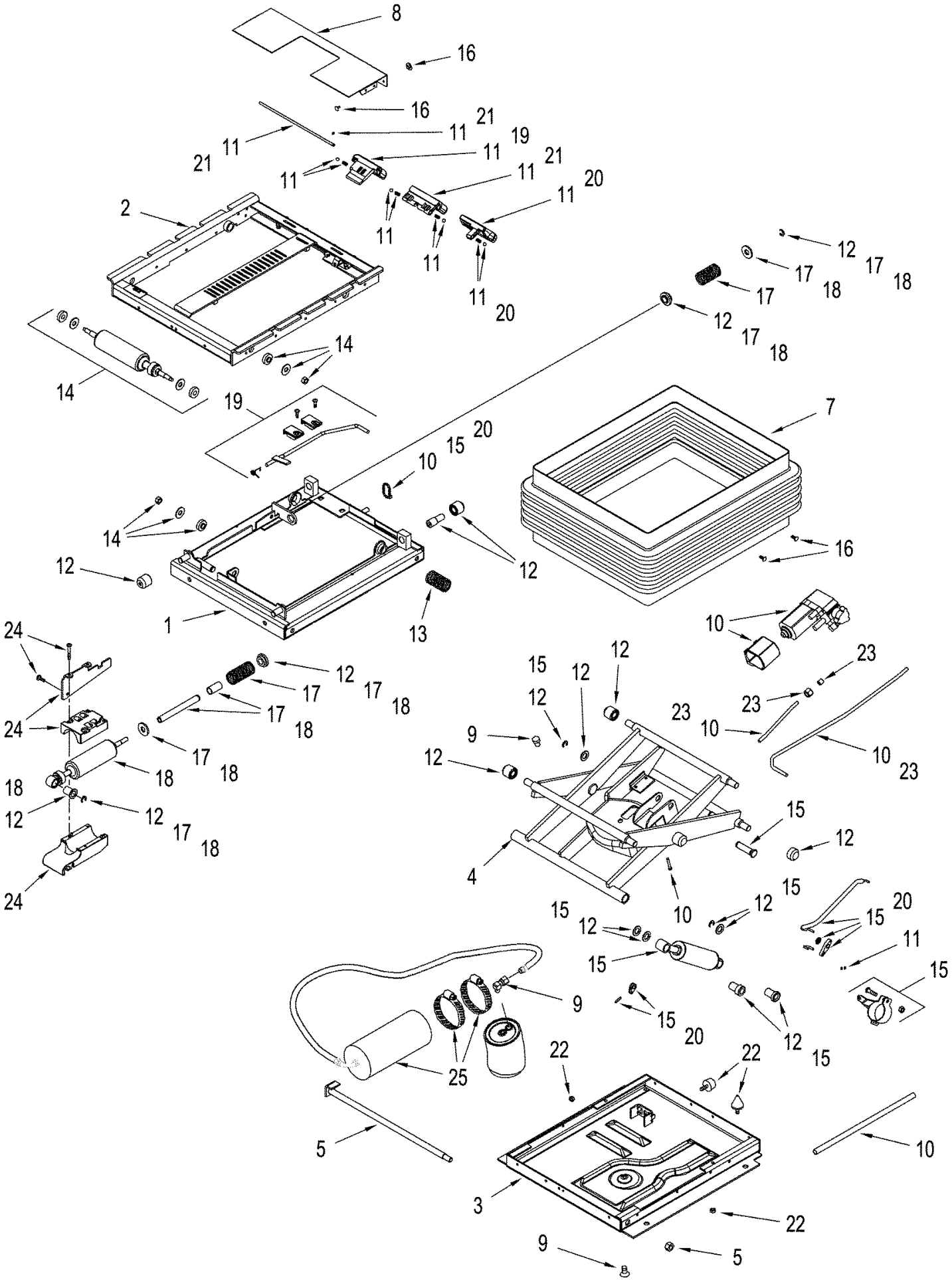

Seats With Air Suspension Control Switch Located On Suspension Assembly

MX285 CASE IH MAGNUM TRACTOR (NORTH AMERICA)

09-31 POSITIVE RESPONSE SUSPENSION ASSEMBLY - SEAT

ссылка	Номер детали	Кол-во	Описание
	400184A1	1	KIT, Suspension, Inc. 1 - 27
1	333273A1	1	HOUSING, Upper
2	333274A2	1	ISOLATOR,
3	86994256	1	HOUSING, Lower
4	86994258	1	ARM,
5	302033A1	1	SHAFT,
6	86994269	1	HARNESS, WIRE,
7	333278A1	1	BOOT,
8	302029A2	1	PLATE,
9	86994203	1	KIT, SERVICE, Air Spring
10	87407038	1	KIT, SERVICE, Compessor
11	87407047	1	KIT, SERVICE, Knobs
12	333283A2	1	PACKAGE,SERVICE, Suspension Bearing And Rollers
13	333284A1	1	PACKAGE,SERVICE, Lateral Isolator Spring
14	333285A1	1	PACKAGE,SERVICE, Lateral Isolator Shock Absorber
15	86994260	1	KIT, SERVICE, Shock
16	333659A1	1	PACKAGE,SERVICE, Boot Pin
17	333287A2	1	PACKAGE,SERVICE, Fore And Aft Isolator Spring
18	333288A2	1	PACKAGE,SERVICE, Fore And Aft Shock Absorber
19	373470A2	1	PACKAGE,SERVICE, Fore And Aft Isolator Control
20	87440465	1	KIT, SERVICE, Control
21	373473A1	1	PACKAGE,SERVICE, Lateral Isolator Control
22	333295A1	1	PACKAGE,SERVICE, Suspension Bumper
23	374359A1	1	PACKAGE,SERVICE, Suspension Shock Cable
24	333296A1	1	PACKAGE,SERVICE, Fore And Aft Isolator Shock Block
25	86994268	1	KIT, SERVICE, Air Tank
26	9845783	1	VALVE, CONTROL, Air (Not Shown)
27	87435206	1	KIT, Air Tank Hose (Not Shown)

Seats With Air Suspension Control Switch Located On Suspension Assembly

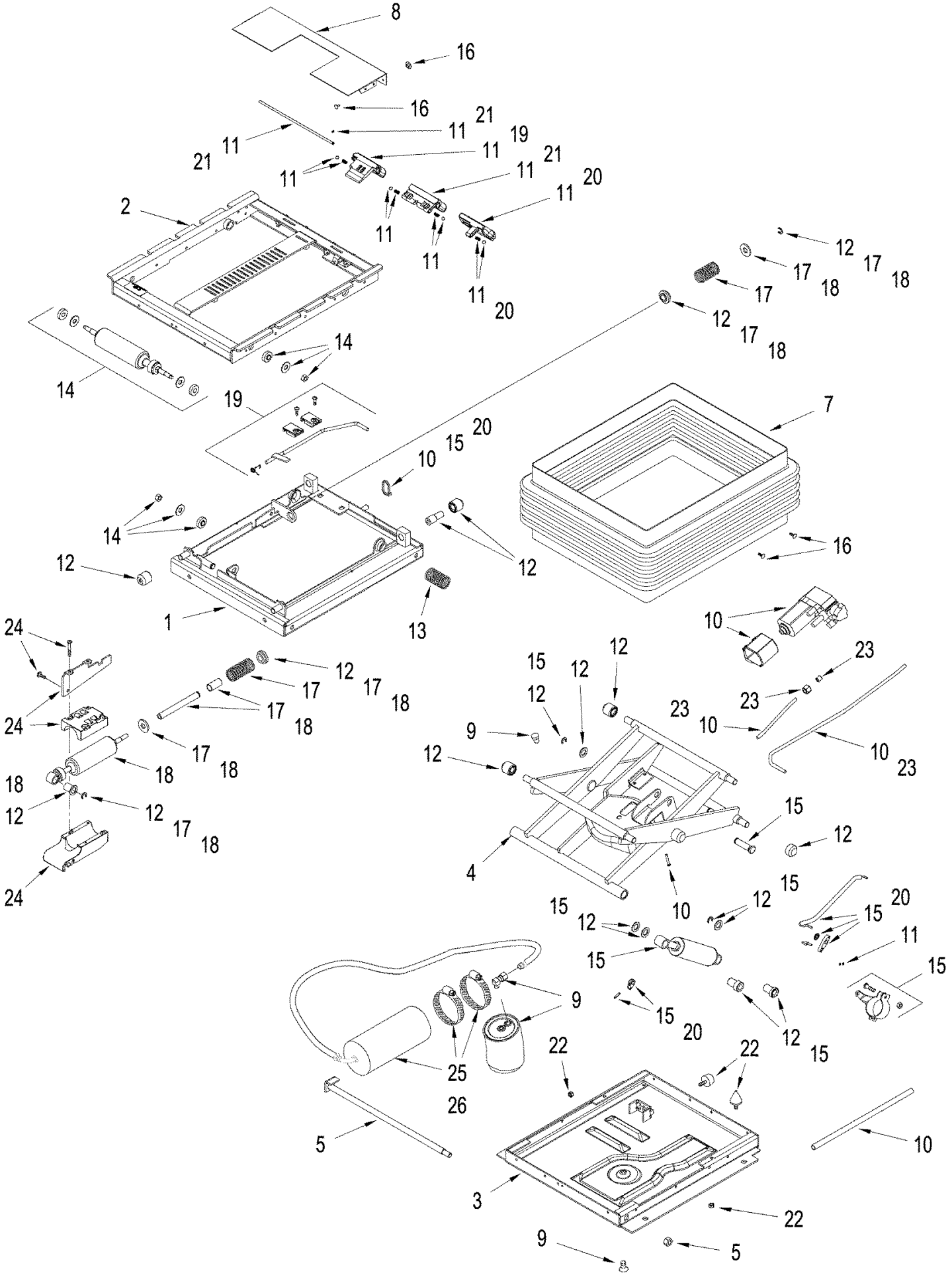

Seats With Air Suspension Control Switch Located In Armrest

MX285 CASE IH MAGNUM TRACTOR (NORTH AMERICA)

09-31A POSITIVE RESPONSE SUSPENSION ASSEMBLY - SEAT

ссылка	Номер детали	Кол-во	Описание
	87347886	1	SUSPENSION, Inc. 1 - 26
1	333273A1	1	HOUSING, Upper
2	333274A2	1	ISOLATOR,
3	86994256	1	HOUSING, Lower
4	86994258	1	ARM,
5	302033A1	1	SHAFT,
6	87347944	1	KIT, SERVICE, Harness, Suspension, Not Shown, See Figure 09-29A
7	87347943	1	KIT, SERVICE, Boot
8	302029A2	1	PLATE,
9	333279A2	1	KIT, Air Spring
10	87347952	1	KIT, SERVICE, Air Compessor
11	87407047	1	KIT, SERVICE, Suspension Knobs
12	333283A2	1	PACKAGE,SERVICE, Suspension Bearing And Rollers
13	333284A1	1	PACKAGE,SERVICE, Lateral Isolator Spring
14	333285A1	1	PACKAGE,SERVICE, Lateral Isolator Shock Absorber
15	86994260	1	KIT, SERVICE, Shock
16	333659A1	1	PACKAGE,SERVICE, Boot Pin
17	333287A2	1	PACKAGE,SERVICE, Fore And Aft Isolator Spring
18	333288A2	1	PACKAGE,SERVICE, Fore And Aft Shock Absorber
19	373470A2	1	PACKAGE,SERVICE, Fore And Aft Isolator Control
20	87347953	1	KIT, SERVICE, Shock Absorber Control
21	373473A1	1	PACKAGE,SERVICE, Lateral Isolator Control
22	333295A1	1	PACKAGE,SERVICE, Suspension Bumper
23	374359A1	1	PACKAGE,SERVICE, Suspension Shock Cable, Not Shown
24	333296A1	1	PACKAGE,SERVICE, Fore And Aft Isolator Shock Block
25	87347960	1	KIT, SERVICE, Air Tank
26	86994268	1	KIT, SERVICE, Air Tank

Seats With Air Suspension Control Switch Located In Armrest

MX285 CASE IH MAGNUM TRACTOR (NORTH AMERICA)

09-32 SEAT - INSTRUCTIONAL

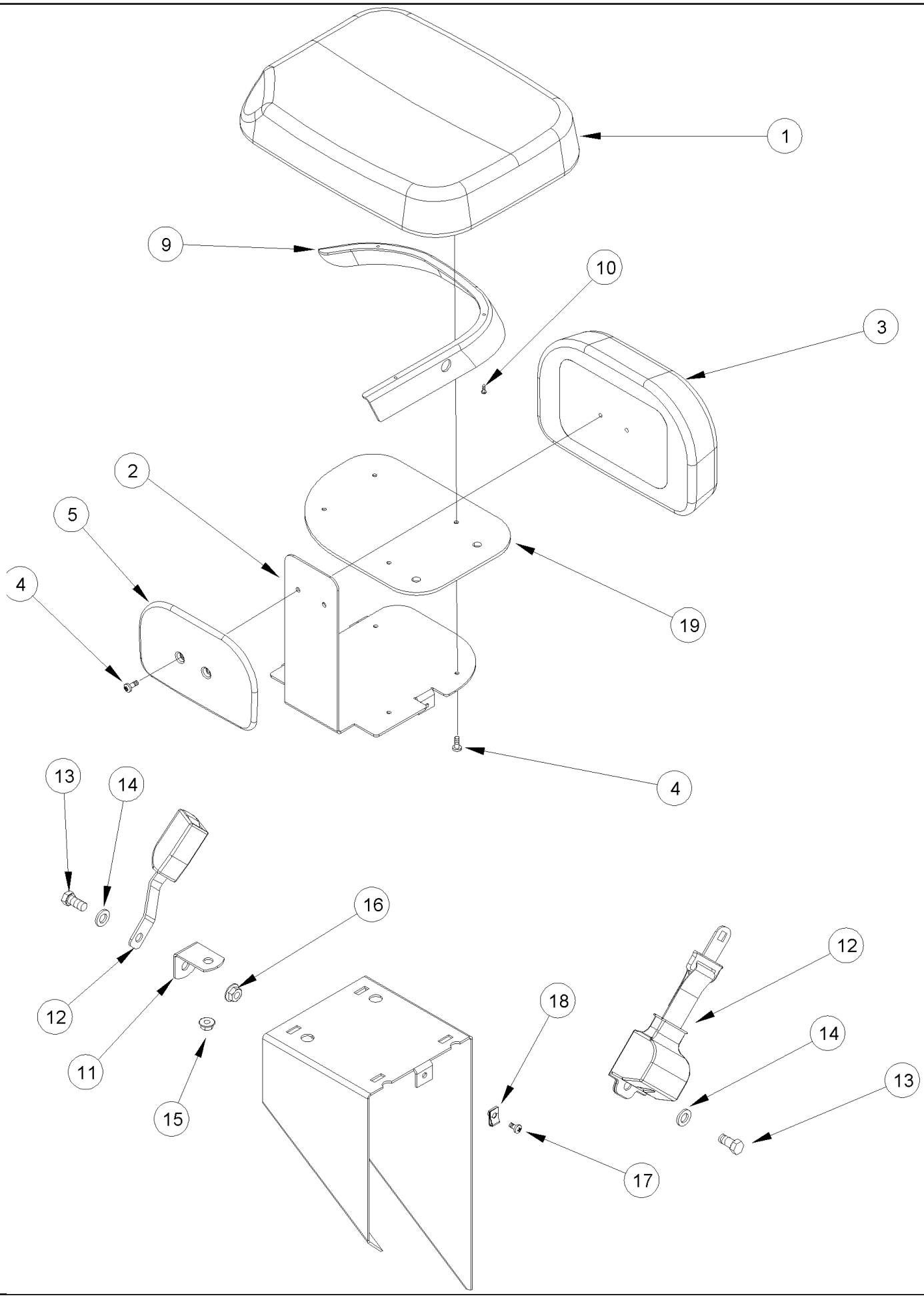

MX285 CASE IH MAGNUM TRACTOR (NORTH AMERICA)

09-32 SEAT - INSTRUCTIONAL

ссылка	Номер детали	Кол-во	Описание
1	359027A1	1	CUSHION, SEAT, , Standard Cab, Deluxe Cab
1	359030A2	1	COVER, SEAT, , Luxury Cab
2	296316A3	1	SUPPORT,
3	359028A1	1	COVER, BACKREST, , Standard Cab, Deluxe Cab
3	359031A2	1	COVER, BACKREST, , Luxury Cab
4	840-2616	6	SCREW, Cross Pan Hd, M6 x 16, M6 x 16; 4.8
5	359029A1	1	COVER,
9	359039A1	1	BEZEL,
10	760-14113	3	SCREW, SELF TAP, Pan Hd, M3.5 x 13, 3,5 x 12,7 mm
11	309099A1	1	SUPPORT,
12	224808A1	1	BELT, SAFETY,
13	614-12025	2	BOLT, Hex, M12 x 25, 8.8, M12 x 25; 8.8
14	896-11012	2	WASHER, M13.5 x 24.5 x 3, HT, 13,5 x 24 x 3 mm
15	825-51410	1	NUT, M10, Flg Ser,
16	825-51412	1	NUT, M12, Flg Ser, M12
17	844-6025	1	BOLT, Hex Flg, M6 x 25, 8.8,
18	833-40306	1	NUT, M6, U, M6
19	381940A1	1	PANEL,

MX285 CASE IH MAGNUM TRACTOR (NORTH AMERICA)

09-33 CONSOLE, RIGHT HAND, STANDARD CAB

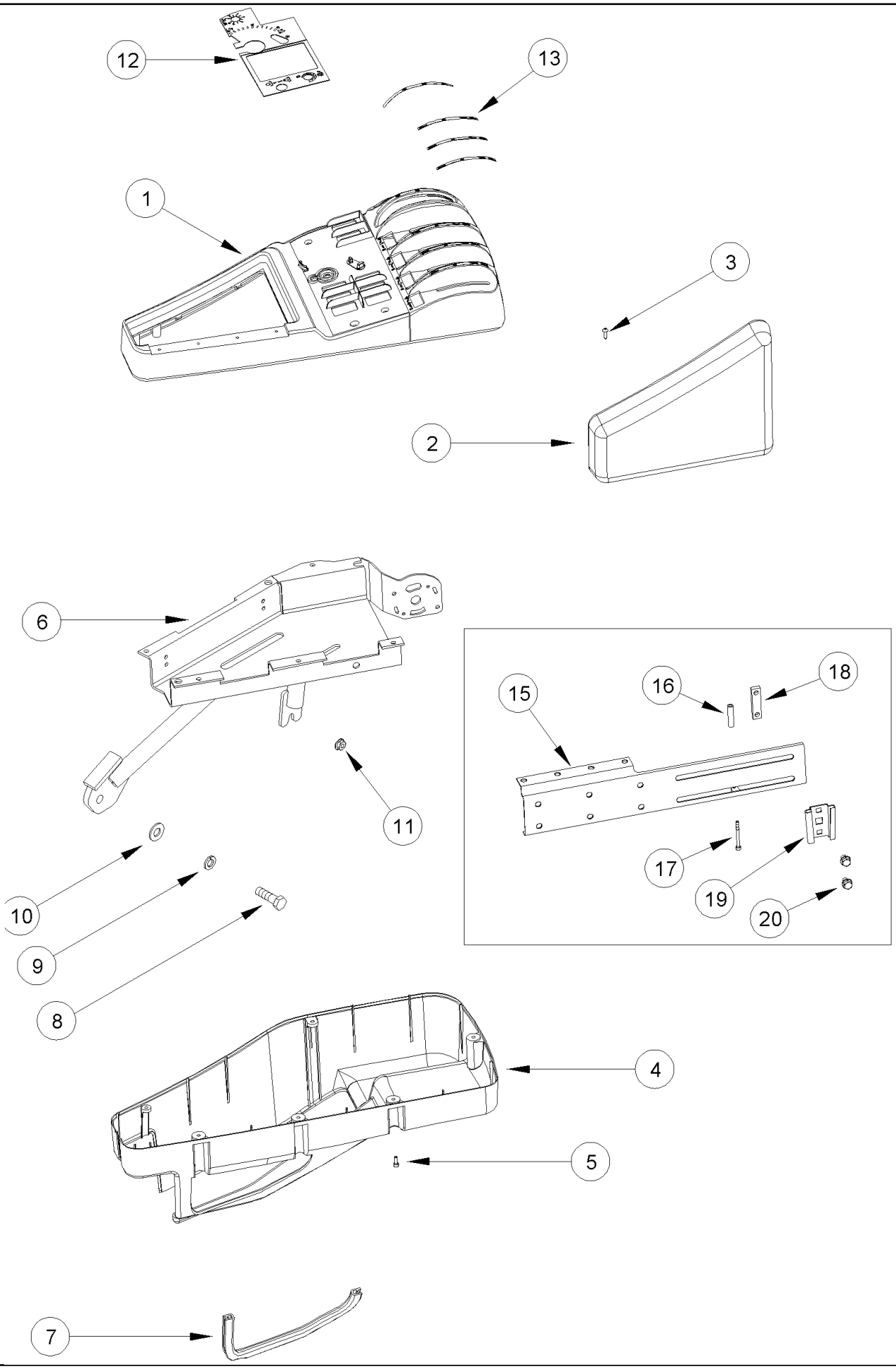

MX285 CASE IH MAGNUM TRACTOR (NORTH AMERICA)

09-33 CONSOLE, RIGHT HAND, STANDARD CAB

ссылка	Номер детали	Кол-во	Описание
1	408521A3	1	HOUSING, Upper, Inc. 13
2	277204A2	1	CUSHION,
3	760-14316	4	SCREW, SELF TAP, Pan Hd, M4.2 x 16, M4,2 x 16
4	358814A1	1	HOUSING, Lower
5	864-4012	6	SCREW, Hex Soc Hd, M4 x 12, 8.8, M4 x 12
6	319913A4	1	CONSOLE,
7	329057A1	1	LINING,
8	627-12040	1	BOLT, Hex, M12 x 40, 10.9, Full Thd, M12 x 40; 10.9
9	892-11012	1	WASHER, LOCK, M12, M12
10	895-15012	1	WASHER, M12 x 28 x 2.5, 13,5 x 28 x 2,5 mm
11	832-10408	1	NUT, M8 x 1.25, Cl 8, M8; 8
12	406315A2	1	DECAL,
13	407759A1	1	DECAL,
	371336A1	1	KIT, Implement Control Bracket, Inc. 15 - 20
15	377950A1	1	BRACKET,
16	371731A1	1	SPACER,
17	864-4060	1	SCREW, Hex Soc Hd, M4 x 60, 8.8, M4 X 60; 8.8
18	368761A1	1	PLATE,
19	A59457	1	BRACKET,
20	844-8012	2	BOLT, Hex Flg, M8 x 12, 8.8, Full Thd, M8 x 12; 8.8

MX285 CASE IH MAGNUM TRACTOR (NORTH AMERICA)

09-34 CONSOLE, RIGHT HAND, DELUXE AND LUXURY CAB

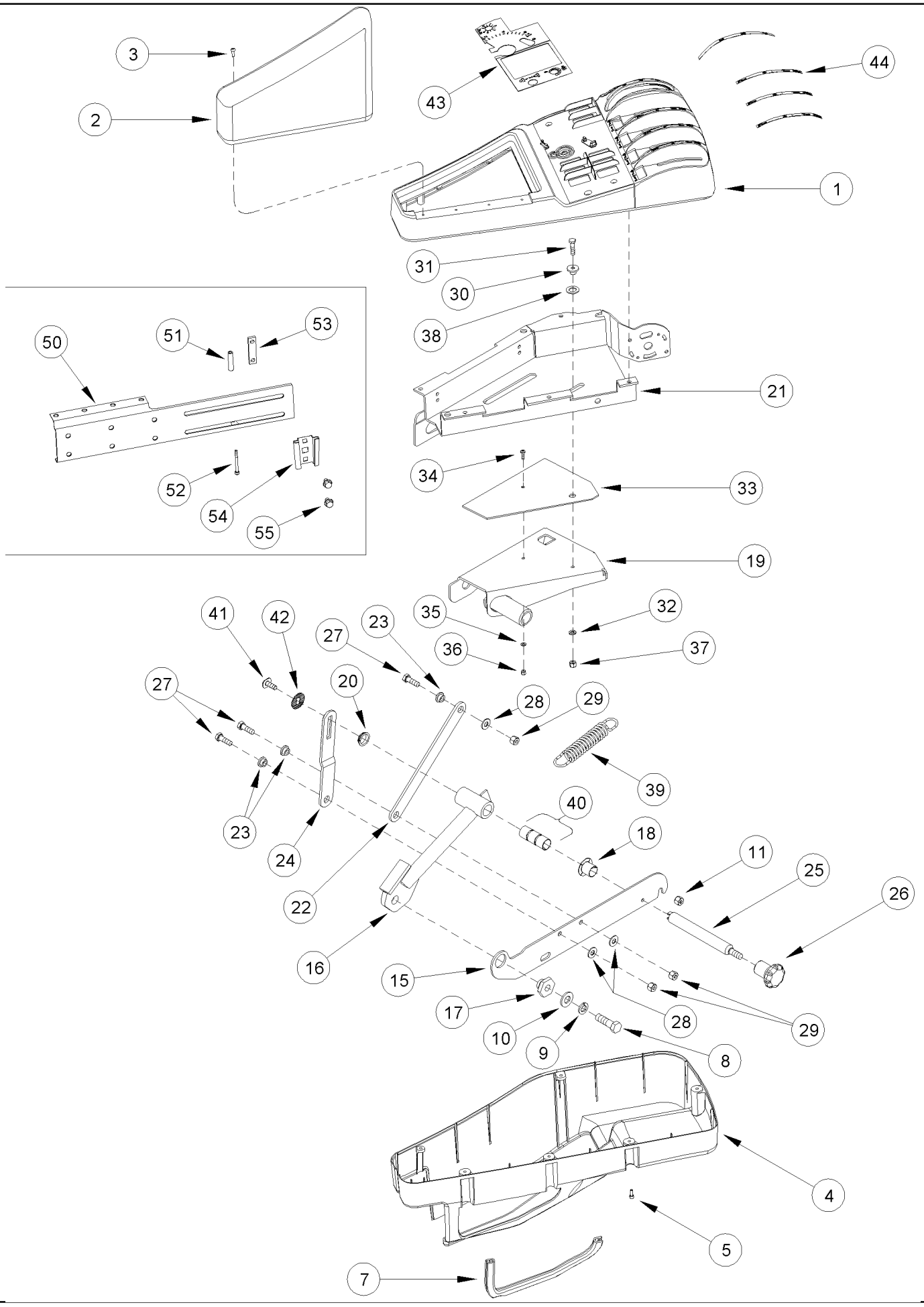

MX285 CASE IH MAGNUM TRACTOR (NORTH AMERICA)

09-34 CONSOLE, RIGHT HAND, DELUXE AND LUXURY CAB

ссылка	Номер детали	Кол-во	Описание
1	408521A3	1	HOUSING, Upper, Inc. 44
2	277204A2	1	CUSHION, , Deluxe Cab
2	358812A1	1	CUSHION ASSY., , Luxury Cab
3	760-14316	4	SCREW, SELF TAP, Pan Hd, M4.2 x 16, M4,2 x 16
4	358814A1	1	HOUSING, Lower
5	864-4012	6	SCREW, Hex Soc Hd, M4 x 12, 8.8, M4 x 12
7	329057A1	1	LINING,
8	627-12040	1	BOLT, Hex, M12 x 40, 10.9, Full Thd, M12 x 40; 10.9
9	892-11012	1	WASHER, LOCK, M12, M12
10	895-15012	1	WASHER, M12 x 28 x 2.5, 13,5 x 28 x 2,5 mm
11	832-10408	1	NUT, M8 x 1.25, Cl 8, M8; 8
	302092A5	1	CONSOLE, Inc. 15 - 42
15	NSS	1	NOT SERVICED SEPARATELY, Plate
16	NSS	1	NOT SERVICED SEPARATELY, Support
17	222292A1	1	NUT,
18	185062R1	1	BUSHING,
19	NSS	1	NOT SERVICED SEPARATELY, Support
20	294296A1	1	BUSHING,
21	NSS	1	NOT SERVICED SEPARATELY, Support
22	NSS	1	NOT SERVICED SEPARATELY, Bracket
23	NSS	3	NOT SERVICED SEPARATELY, Washer, Special
24	NSS	1	NOT SERVICED SEPARATELY, Bracket
25	NSS	1	NOT SERVICED SEPARATELY, Bolt, Special
26	319870A1	1	KNOB,
28	895-15008	3	WASHER, M8 x 20 x 1.6, 9 x 20 x 1,6 mm
29	832-10408	3	NUT, M8 x 1.25, Cl 8, M8; 8
30	277582A1	1	WASHER,
31	628-6025	1	BOLT, Hex, M6 x 25, 10.9, Full Thd, M6 x 25; 10.9
32	895-11006	1	WASHER, M6, 6,6 x 12 x 1,6 mm
33	277576A1	1	SPACER,
34	840-1414	1	SCREW, Cross Pan Hd, M4 x 14, M4 x 14
35	895-11004	1	WASHER, M4, 4,3 x 9 x 0,8 mm
36	832-10404	1	NUT, M4 x .7, Cl 8, M4; 8
37	832-10406	1	NUT, M6 x 1, Cl 8, M6; 8
38	277570A1	1	WASHER,
39	NSS	1	NOT SERVICED SEPARATELY, Spring
40	294295A1	3	BUSHING,
41	NSS	1	NOT SERVICED SEPARATELY, Bolt, Special
42	NSS	1	NOT SERVICED SEPARATELY, Washer, Special
43	406315A2	1	DECAL,
44	407759A1	1	DECAL,
	371336A1	1	KIT, Implement Control Bracket, Inc. 50 - 55
50	377950A1	1	BRACKET,
51	371731A1	1	SPACER,
52	864-4060	1	SCREW, Hex Soc Hd, M4 x 60, 8.8, M4 X 60; 8.8

MX285 CASE IH MAGNUM TRACTOR (NORTH AMERICA)

09-34 CONSOLE, RIGHT HAND, DELUXE AND LUXURY CAB

ссылка	Номер детали	Кол-во	Описание
53	368761A1	1	PLATE,
54	A59457	1	BRACKET,
55	844-8012	2	BOLT, Hex Flg, M8 x 12, 8.8, Full Thd, M8 x 12; 8.8
27	627-8025	3	BOLT, Hex, M8 x 25, 10.9, M8 x 25; 10.9

MX285 CASE IH MAGNUM TRACTOR (NORTH AMERICA)

09-35 MONITOR MOUNTING - CAB ROOF

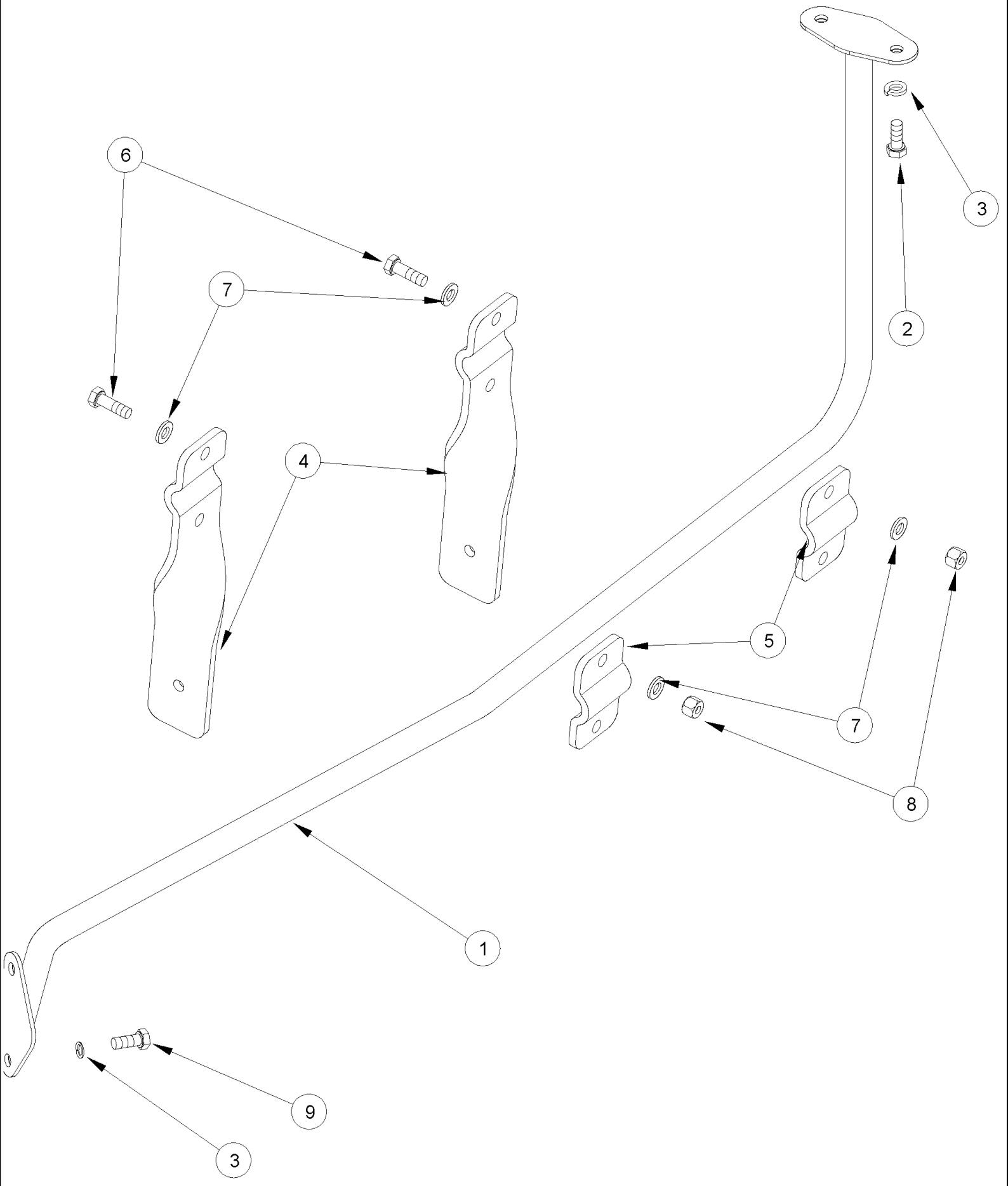

MX285 CASE IH MAGNUM TRACTOR (NORTH AMERICA)

09-35 MONITOR MOUNTING - CAB ROOF

ссылка	Номер детали	Кол-во	Описание
1	301152A3	1	BAR,
2	514-632	2	BOLT, Hex, M8 x 25, 8.8, Full Thd, M8 X 25; 8.8
3	892-14008	4	WASHER, LOCK, M8, M8
4	103213A1	2	HOLDER,
5	103226A1	2	CLAMP,
6	514-633	4	BOLT, Hex, M8 x 30, 8.8, Full Thd, M8 x 30; 8.8
7	256402A1	8	WASHER, 9 x 17 x 1,6 mm
8	832-10408	4	NUT, M8 x 1.25, Cl 8, M8; 8
9	514-620	2	BOLT, Hex, M8 x 20, 5.8, Full Thd, M8 x 20; 8.8

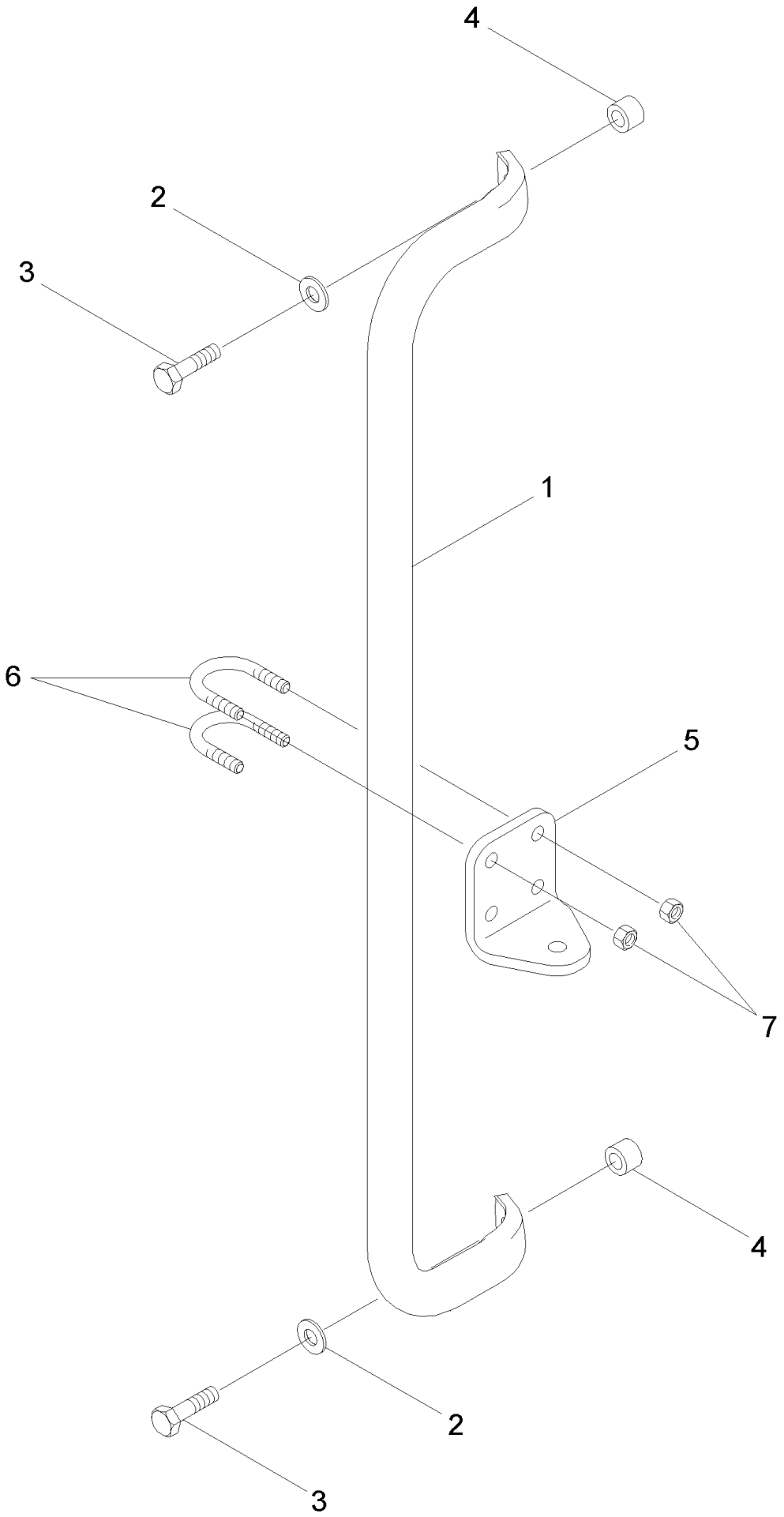
4
2
3
1
6
5
7
4
2
3

MX285 CASE IH MAGNUM TRACTOR (NORTH AMERICA)

09-36 MONITOR MOUNTING - CAB A POST

ссылка	Номер детали	Кол-во	Описание
1	369275A1	1	TUBE,
2	895-11008	2	WASHER, M8 x 16 x 1.6, 9 x 16 x 1,6 mm
4	371838A1	2	SPACER,
5	372455A1	1	BRACKET,
6	19-6258	2	U-BOLT, 1/4 in
7	425-104	4	NUT, 1/4"-20, G5,
3	827-8035	2	BOLT, Hex, M8 x 35, 10.9, M8 x 35; 10.9

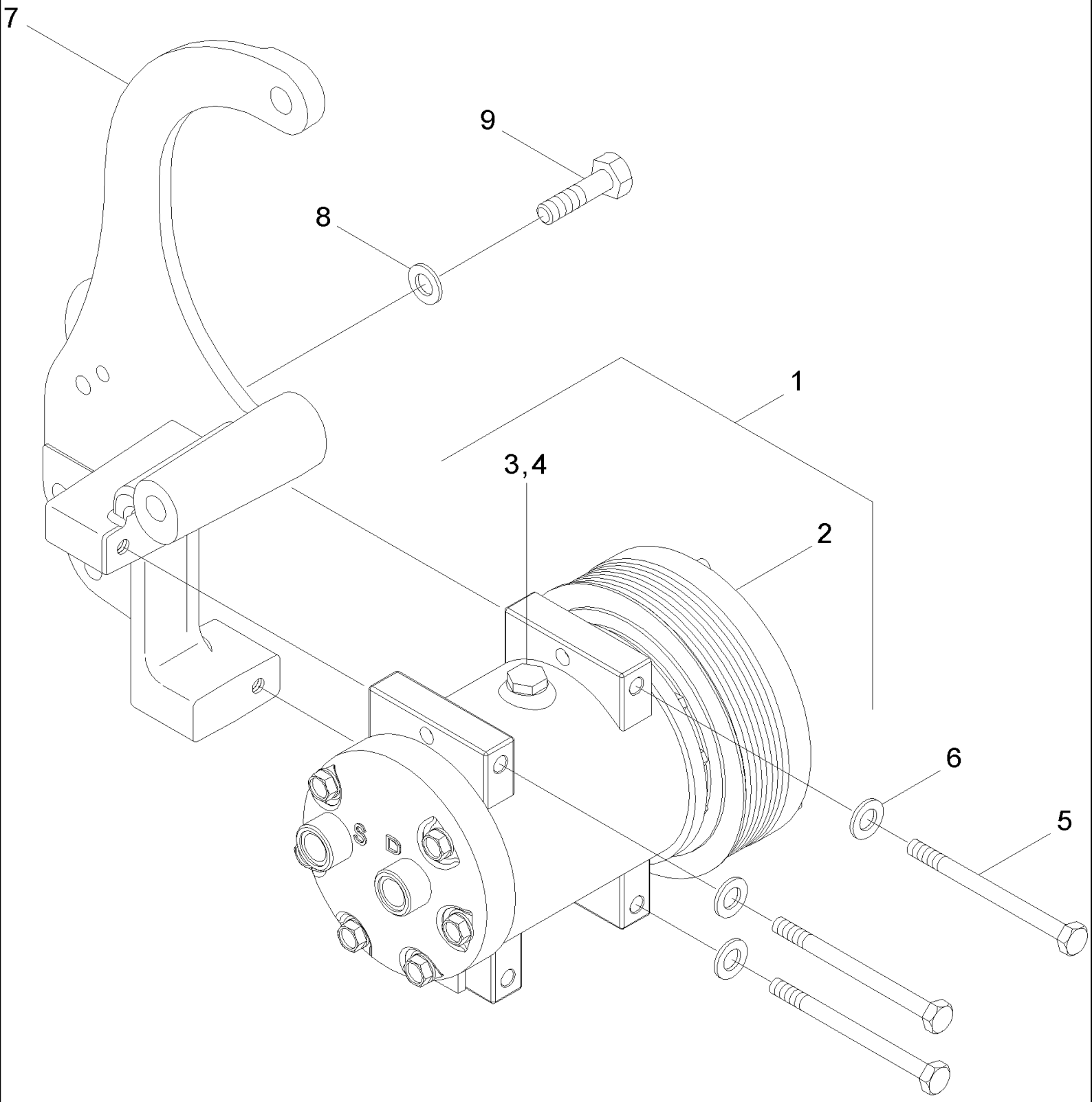
7
9
8
1
3,4
2
6
5
S
D

MX285 CASE IH MAGNUM TRACTOR (NORTH AMERICA)

09-37 AIR CONDITIONING - COMPRESSOR MOUNTING

ссылка	Номер детали	Кол-во	Описание
1	317008A3	1	COMPRESSOR, AIRCOND, Inc. 2 - 4
2	403585A1	1	CLUTCH,
3	A49667	1	PLUG,
4	128483A1	1	O-RING, 5/16 ID x 1/16
5	814-8100	3	BOLT, Hex, M8 x 100, 8.8, M8 x 100
6	895-11008	3	WASHER, M8 x 16 x 1.6, 9 x 16 x 1,6 mm
7	394717A4	1	SUPPORT,
8	895-11010	3	WASHER, M10 x 20 x 2, 11 x 20 x 2 mm
9	628-10030	3	BOLT, Hex, M10 x 30, 10.9, Full Thd, M10 x 30; 10.9

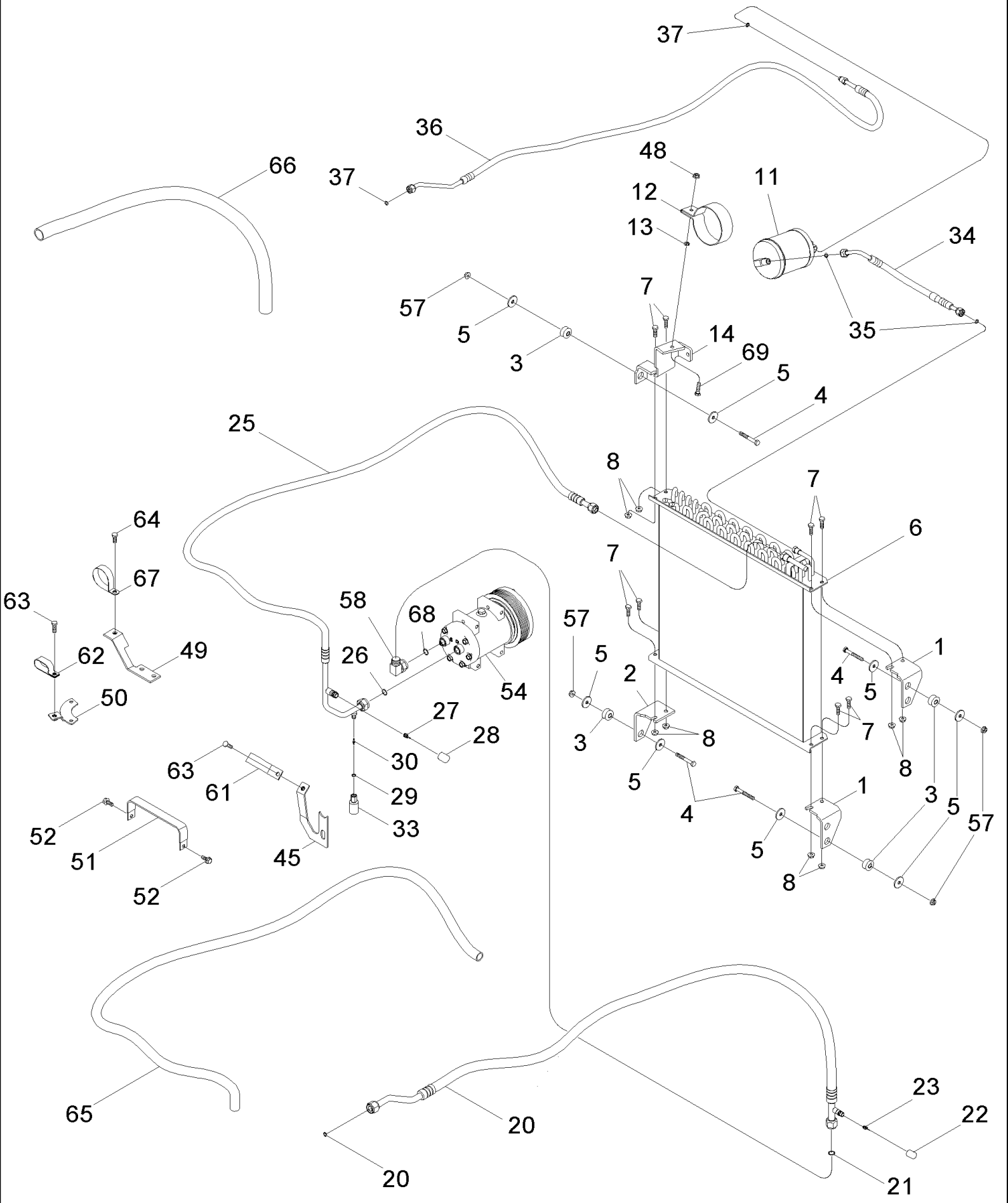
37
36
66
37
48
12
11
13
34
57
7
5
14
35
3
69
5
4
25
8
7
64
6
7
67
63
58
68
57
62
49
26
5
1
2
4
5
50
54
27
7
28
3
8
8
63
30
5
61
29
1
3
5
52
33
4
57
51
45
5
52
8
65
23
20
22
20
21

MX285 CASE IH MAGNUM TRACTOR (NORTH AMERICA)

09-38 AIR CONDITIONING - CONDENSER

ссылка	Номер детали	Кол-во	Описание
1	409965A1	2	BRACKET, Right Hand
2	409966A1	1	BRACKET, Left Hand
3	434177A1	4	MOUNTING, RUBBER,
4	814-8060	4	BOLT, Hex, M8 x 60, 8.8, M8 x 60; 8.8
5	495-81120	8	WASHER, .344" x 1 1/4" x .120", 11/32 x 1-1/4 x 7/64
6	246841A2	1	CONDENSER,
7	844-8025	8	BOLT, Hex Flg, M8 x 25, 8.8, M8 x 25; 8.8
8	825-2408	8	NUT, M8 x 1.25, Flg, Cl 8,
11	1990758C2	1	RECEIVER-DRYER,
12	250965A1	1	CLAMP,
13	829-4408	1	NUT, Thin, M8 x 1.25, Cl 05, M8
14	428484A1	1	BRACKET,
20	417845A2	1	HOSE ASSY., Inc. 21 - 23
21	128485A1	2	O-RING, 9/16 ID x 1/16
22	414081A1	1	CAP,
23	414083A1	1	CORE,
25	446670A1	1	HOSE, Inc. 26 - 30
26	128485A1	2	O-RING, 9/16 ID x 1/16
27	414082A1	1	CORE,
28	414080A1	1	CAP,
29	128483A1	1	O-RING, 5/16 ID x 1/16
30	1250594C2	1	CORE,
31	128484A1	1	O-RING, 7/16 ID x 1/16
33	284273A2	1	SWITCH,
34	192929A2	1	HOSE, Inc. 35
35	128483A1	2	O-RING, 5/16 ID x 1/16
36	242323A4	1	HOSE, Inc. 37
37	128483A1	2	O-RING, 5/16 ID x 1/16
45	414241A1	1	BRACKET, , BSN JAZ132841
45	87437273	1	BRACKET, , ASN JAZ132841
48	825-2408	1	NUT, M8 x 1.25, Flg, Cl 8,
49	414267A2	1	BRACKET,
50	414262A1	1	BRACKET,
51	408735A1	1	GUIDE,
52	844-8020	2	BOLT, Hex Flg, M8 x 20, 8.8,
54	317008A3	1	COMPRESSOR, AIRCOND, , See Figure 09-37
57	825-5148	4	NUT, M8, Flg Ser,
58	429210A1	1	ELBOW,
59	614-8025	8	BOLT, Hex, M8 x 25, 8.8,
60	825-5148	8	NUT, M8, Flg Ser,
61	1301387C1	3	CLIP,
62	470375C1	1	WIRE, RETAINING,
63	614-8025	2	BOLT, Hex, M8 x 25, 8.8,
64	614-8020	2	BOLT, Hex, M8 x 20, 8.8, M8 x 20; 8.8
65	87403388	1	CONDUIT,

ссылка	Номер детали	Кол-во	Описание
66	87403389	1	CONDUIT,

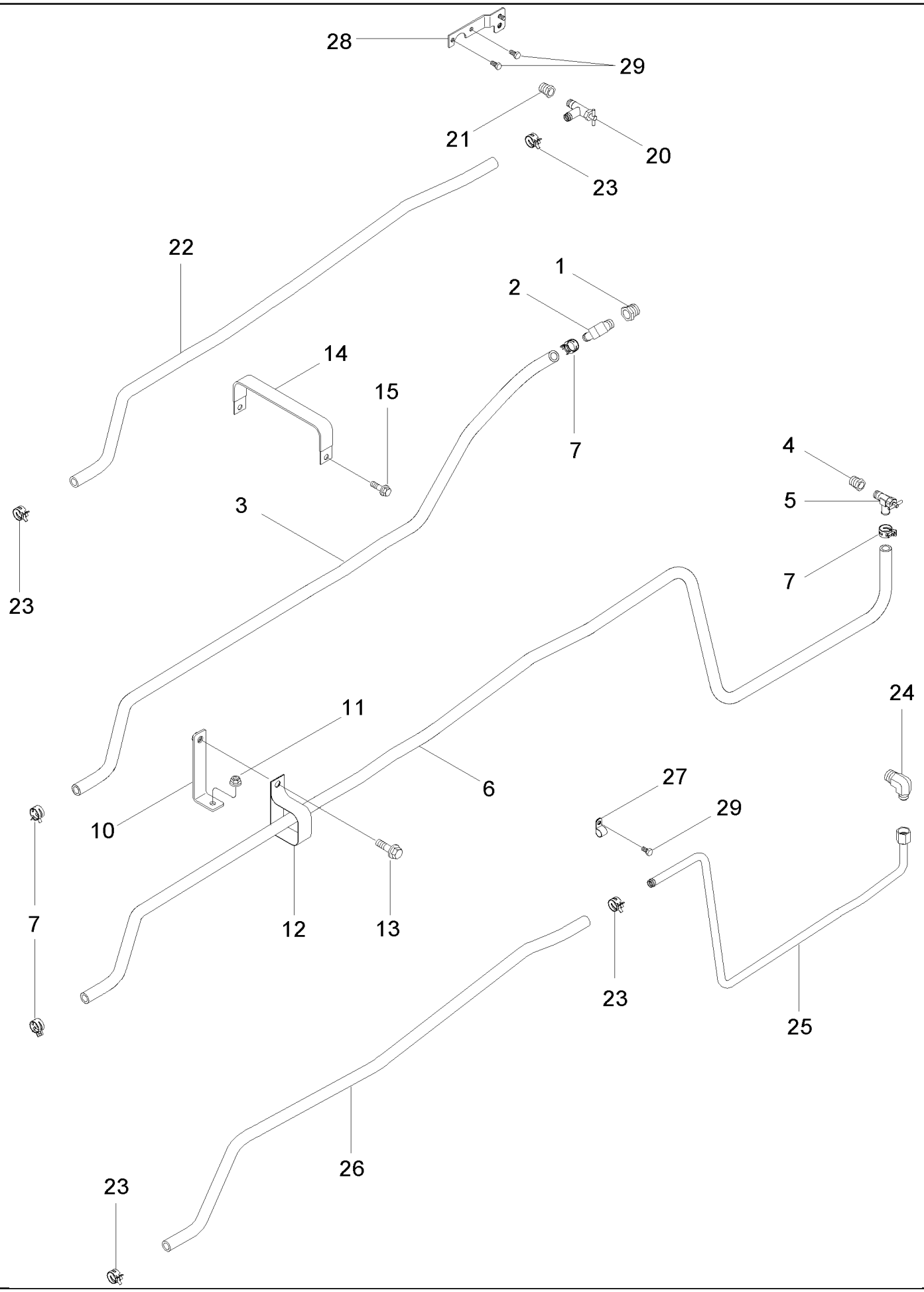
28
29
21
20
23
22
1
2
14
15
7
4
5
3
23
7
11
24
6
27
29
10
12
13
7
23
25
26
23

MX285 CASE IH MAGNUM TRACTOR (NORTH AMERICA)

09-39 HEATER SYSTEM

сылка	Номер детали	Кол-во	Описание
1	217-45	1	REDUCER, 3/4"-14 NPTF x 1/2"-18 Fem NPTF, 3/4 PT x 1/2 PT
2	217-134	1	ELBOW, 90є, 5/8" Hose x 1/2" NPTF Beaded, 5/8 stem x 1/2 PT, BSN JAZ130634
3	1974656C1	1	HOSE, Cut From 97252CX, BSN JAZ130634
4	221-1092	1	BUSHING, Hex, 3/4" x 3/8" NPT, 3/4 PT x 3/8 PT, BSN JAZ130634
5	301803R1	1	VALVE, SHUT-OFF, , BSN JAZ130634
6	1327781C2	1	HOSE, 2921 mm (115 in), Cut From 97252CX, BSN JAZ130634
7	1954736C1	4	CLAMP, No. 24, BSN JAZ130634
10	414850A1	1	BRACKET,
11	825-2408	1	NUT, M8 x 1.25, Flg, Cl 8,
12	1301387C2	1	CLIP,
13	614-8020	1	BOLT, Hex, M8 x 20, 8.8, M8 x 20; 8.8
14	408735A1	2	GUIDE, , BSN JAZ130634
15	844-8020	2	BOLT, Hex Flg, M8 x 20, 8.8, , BSN JAZ130634
20	301803R1	1	VALVE, SHUT-OFF, , ASN JAZ130634
21	221-1092	1	BUSHING, Hex, 3/4" x 3/8" NPT, , ASN JAZ130634
22	1974656C1	1	HOSE, , ASN JAZ130634
23	1954736C2	4	CLAMP, , ASN JAZ130634
24	87429524	1	ELBOW, , ASN JAZ130634
25	87416046	1	TUBE ASSY., Steel, ASN JAZ130634
25	87439034	1	TUBE ASSY., Aluminum, ASN JAZ130634
26	1500341C2	1	HOSE, LARGE, , ASN JAZ130634
27	515-22159	1	CLAMP, 5/8", Insul, 5/16" Bolt, , ASN JAZ130634
28	87421281	1	BRACKET, , ASN JAZ130634
29	614-8016	3	BOLT, Hex, M8 x 16, 8.8, , ASN JAZ130634

MX285 CASE IH MAGNUM TRACTOR (NORTH AMERICA)

09-40 AIR CONDITIONING - CLIMATE CONTROL UNIT, WITHOUT AUTO TEMP CONTROL

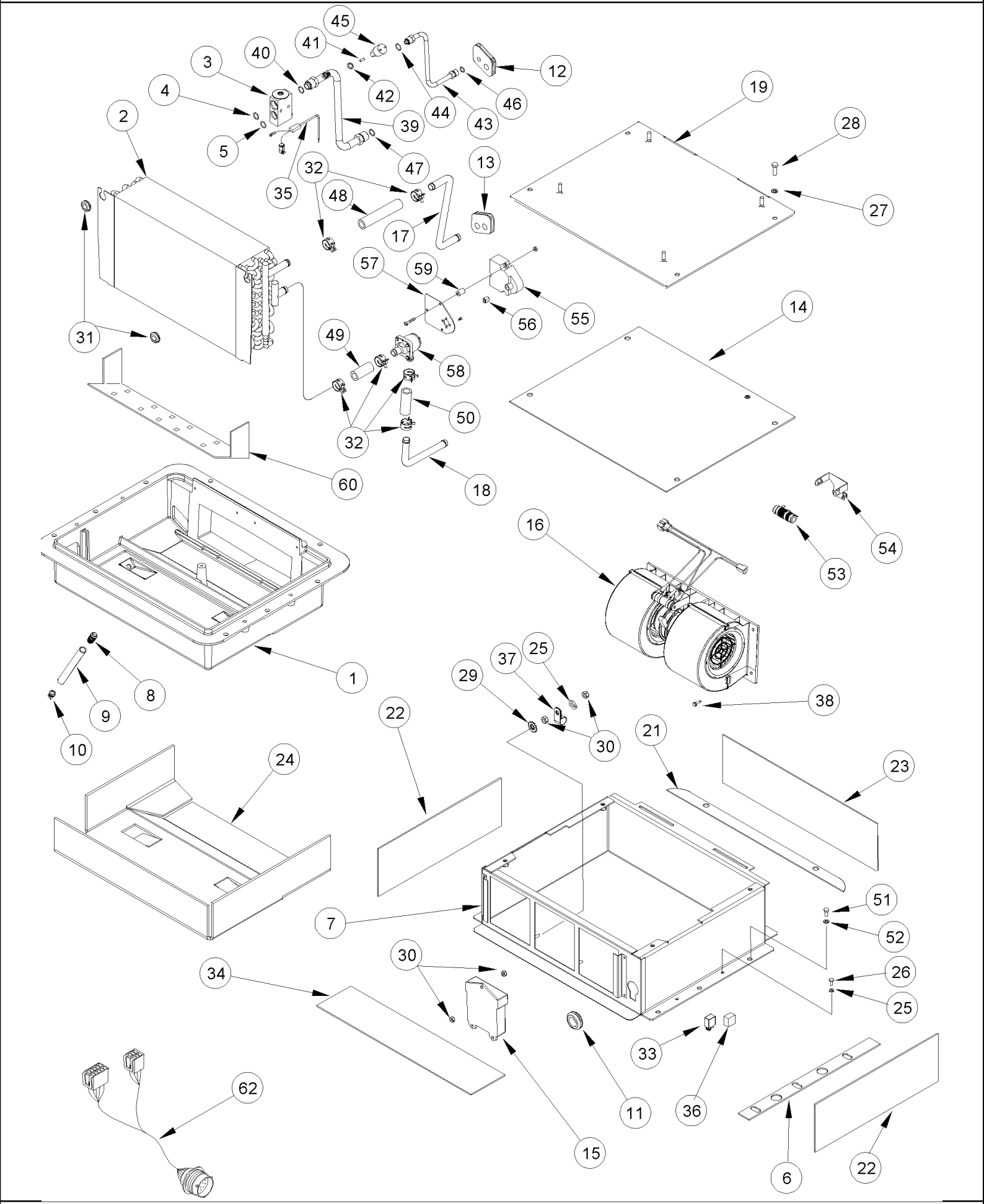

MX285 CASE IH MAGNUM TRACTOR (NORTH AMERICA)

09-40 AIR CONDITIONING - CLIMATE CONTROL UNIT, WITHOUT AUTO TEMP CONTROL

ссылка	Номер детали	Кол-во	Описание
1	322996A1	1	BOX,
2	86990263	1	CORE, Evaporator And Heater, Inc. 3 - 5
3	386535A1	1	VALVE,
4	128485A1	1	O-RING, 9/16 ID x 1/16
5	128484A1	1	O-RING, 7/16 ID x 1/16
6	322994A1	4	GASKET,
7	427242A1	1	BOX,
8	1250522C3	2	ELBOW,
9	1977334C1	2	HOSE, 610 mm (24-1/8 in), Cut From 198091C1
10	109239C2	2	VALVE,
11	248-2381	1	GROMMET, 1" ID x 1 3/8" Groove Dia, 1 ID
12	322989A1	1	GROMMET,
13	322990A1	1	GROMMET,
14	322992A1	1	GASKET,
15	87429903	1	CONTROL, Module
	323611A1	1	BLOWER, ASSEMBLY, Inc. 16, 53, 54
16	323610A1	1	BLOWER,
17	322985A1	1	PIPE, Outlet
18	322987A1	1	PIPE, Inlet
19	323625A1	1	COVER, TOP,
21	322995A1	4	GASKET,
22	322993A1	2	GASKET,
23	322991A1	1	GASKET,
24	324484A1	1	INSULATOR,
25	892-11006	5	WASHER, LOCK, M6, M6
26	614-6012	4	BOLT, Hex, M6 x 12, 8.8, M6 x 12; 8,8
27	892-11008	4	WASHER, LOCK, M8, M8
29	493-81002	1	WASHER, LOCK, Ext-Int Tooth, 1/4", 1/4
30	829-1406	4	NUT, M6, Cl 10, M6; 10.9
31	248-1243	2	GROMMET, 1/2" ID x 13/16" Groove Dia, Diag Cut, 13/16 dia
32	1954736C1	6	CLAMP, No. 24
33	87414866	1	RELAY, 20 Amp
34	327306A1	1	GASKET,
35	323016A1	1	SENSOR,
36	327308A1	1	HARNESS,
37	515-21127	1	CLAMP, 1/2", Insul, 1/4" Bolt, 1/2 ID
38	281-14512	4	SCREW, SELF TAP, Hex Wash Hd, #10 x 3/4", No. 10 x 3/4
39	322839A1	1	PIPE, Inc. 40 - 42
40	128485A1	1	O-RING, 9/16 ID x 1/16
41	1250594C2	1	CORE,
42	128483A1	1	O-RING, 5/16 ID x 1/16
43	322840A1	1	PIPE, Inc. 44
44	128483A1	1	O-RING, 5/16 ID x 1/16
45	284272A3	1	SWITCH, PRESSURE, Low Pressure
46	128484A1	1	O-RING, 7/16 ID x 1/16

MX285 CASE IH MAGNUM TRACTOR (NORTH AMERICA)

09-40 AIR CONDITIONING - CLIMATE CONTROL UNIT, WITHOUT AUTO TEMP CONTROL

ссылка	Номер детали	Кол-во	Описание
47	128485A1	1	O-RING, 9/16 ID x 1/16
48	1321290C2	1	HOSE, 127 mm (5 in), Cut From 97252CX
49	324022A1	1	HOSE, 54 mm (2-1/8 in), Cut From 97252CX
50	324023A1	1	HOSE, 64 mm (2-1/2 in), Cut From 97252CX
51	781-24825	8	SCREW, SELF TAP, Hex Flg Hd, M8 x 25, M8 x 25
52	892-11008	8	WASHER, LOCK, M8, M8
53	401360A1	1	RESISTOR,
54	360032A1	1	BRACKET,
	427356A1	1	VALVE, CONTROL, Inc. 55 - 59
55	275602A1	1	MOTOR, ELECTRIC,
56	427360A1	1	INSERT,
57	427353A1	1	PLATE,
58	427352A1	1	VALVE,
59	427354A1	3	SPACER,
60	86990266	1	BAFFLE,
62	87405664	1	HARNESS,
28	627-8025	4	BOLT, Hex, M8 x 25, 10.9, M8 x 25; 10.9

MX285 CASE IH MAGNUM TRACTOR (NORTH AMERICA)

09-41 AIR CONDITIONING - CLIMATE CONTROL UNIT, WITH AUTO TEMP CONTROL

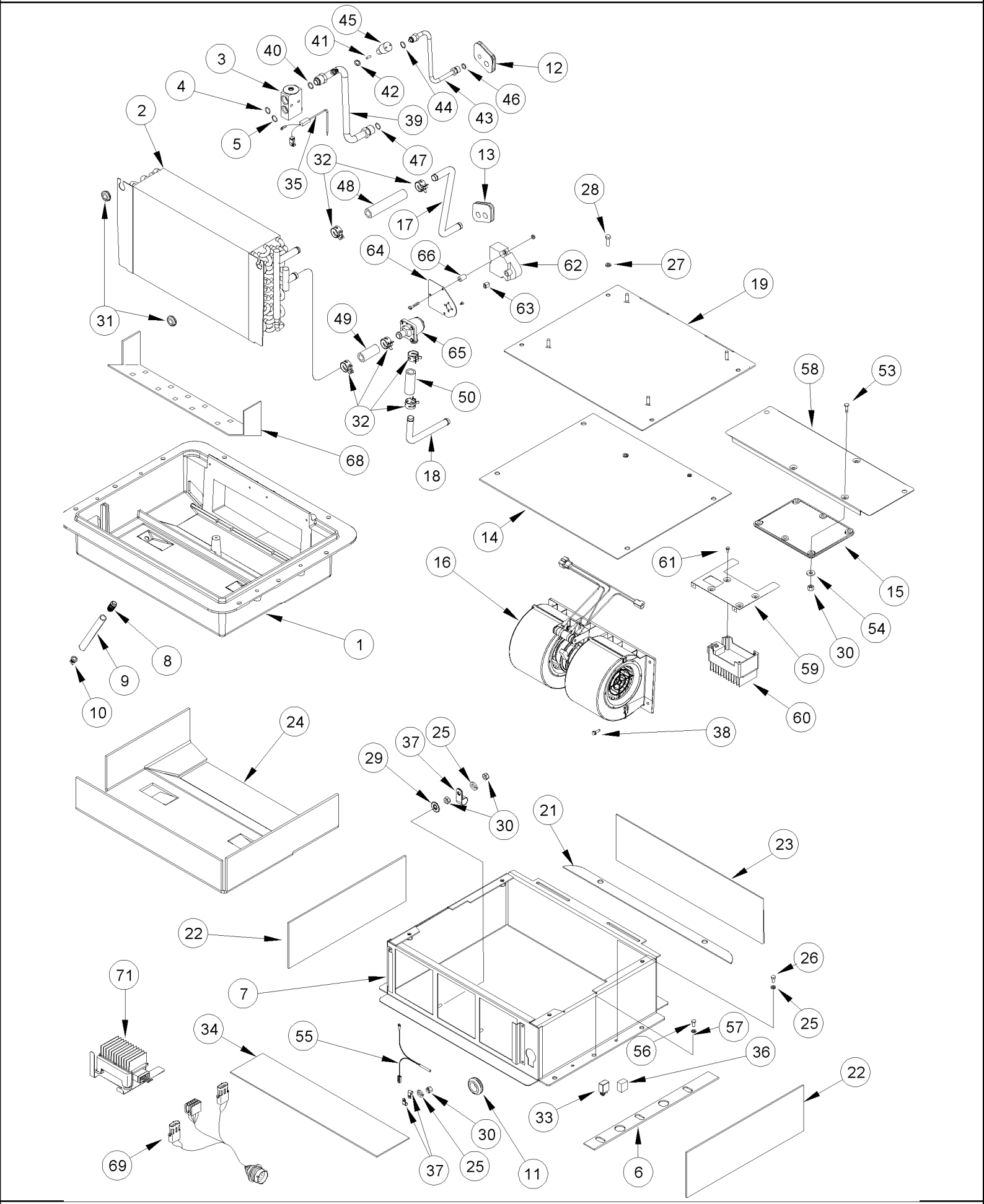

MX285 CASE IH MAGNUM TRACTOR (NORTH AMERICA)

09-41 AIR CONDITIONING - CLIMATE CONTROL UNIT, WITH AUTO TEMP CONTROL

ссылка	Номер детали	Кол-во	Описание
1	322996A1	1	BOX,
2	86990263	1	CORE, Evaporator And Heater, Inc. 3 - 5
3	386535A1	1	VALVE,
4	128485A1	1	O-RING, 9/16 ID x 1/16
5	128484A1	1	O-RING, 7/16 ID x 1/16
6	322994A1	4	GASKET,
7	427242A1	1	BOX,
8	1250522C3	2	ELBOW,
9	1977334C1	2	HOSE, 610 mm (24-1/8 in), Cut From 198091C1
10	109239C2	2	VALVE,
11	248-2381	1	GROMMET, 1" ID x 1 3/8" Groove Dia, 1 ID
12	322989A1	1	GROMMET,
13	322990A1	1	GROMMET,
14	322992A1	1	GASKET,
15	87429902	1	CONTROL,
16	323610A1	1	BLOWER,
17	322985A1	1	PIPE, Outlet
18	322987A1	1	PIPE, Inlet
19	323625A1	1	COVER, TOP,
21	322995A1	4	GASKET,
22	322993A1	2	GASKET,
23	322991A1	1	GASKET,
24	324484A1	1	INSULATOR,
25	892-11006	10	WASHER, LOCK, M6, M6
26	614-6012	4	BOLT, Hex, M6 x 12, 8.8, M6 x 12; 8,8
27	892-11008	4	WASHER, LOCK, M8, M8
29	493-81002	1	WASHER, LOCK, Ext-Int Tooth, 1/4", 1/4
30	829-1406	6	NUT, M6, Cl 10, M6; 10.9
31	248-1243	2	GROMMET, 1/2" ID x 13/16" Groove Dia, Diag Cut, 13/16 dia
32	1954736C1	6	CLAMP, No. 24
33	87414866	1	RELAY, 20 Amp
34	327306A1	1	GASKET,
35	323016A1	1	SENSOR,
36	397704A1	1	HARNESS, WIRE,
37	515-2195	2	CLAMP, 3/8", Insul, 1/4" Bolt, 3/8
38	281-14512	4	SCREW, SELF TAP, Hex Wash Hd, #10 x 3/4", No. 10 x 3/4
39	322839A1	1	PIPE, Inc. 40 - 42
40	128485A1	1	O-RING, 9/16 ID x 1/16
41	1250594C2	1	CORE,
42	128483A1	1	O-RING, 5/16 ID x 1/16
43	322840A1	1	PIPE, Inc. 44
44	128483A1	1	O-RING, 5/16 ID x 1/16
45	284272A3	1	SWITCH, PRESSURE, Low Pressure
46	128484A1	1	O-RING, 7/16 ID x 1/16
47	128485A1	1	O-RING, 9/16 ID x 1/16

MX285 CASE IH MAGNUM TRACTOR (NORTH AMERICA)

09-41 AIR CONDITIONING - CLIMATE CONTROL UNIT, WITH AUTO TEMP CONTROL

ссылка	Номер детали	Кол-во	Описание
48	1321290C2	1	HOSE, 127 mm (5 in), Cut From 97252CX
49	324022A1	1	HOSE, 54 mm (2-1/8 in), Cut From 97252CX
50	324023A1	1	HOSE, 64 mm (2-1/2 in), Cut From 97252CX
53	614-6020	3	BOLT, Hex, M6 x 20, 8.8, M6 x 20; 8,8
54	895-11006	3	WASHER, M6, 6,6 x 12 x 1,6 mm
55	323016A1	1	SENSOR, Return Air
56	781-24825	8	SCREW, SELF TAP, Hex Flg Hd, M8 x 25, M8 x 25
57	892-11008	8	WASHER, LOCK, M8, M8
58	397702A1	1	BRACKET,
	397780A1	1	CONTROL, Inc. 59 - 61
59	397703A1	1	BRACKET,
60	393289A1	1	ELECTRONIC UNIT, CONTROL,
61	280-1448	4	SCREW, SELF TAP, Hex Wash Hd, #8 x 1/2", No 8 x 1/2
	427356A1	1	VALVE, CONTROL, Inc. 62 - 66
62	275602A1	1	MOTOR, ELECTRIC,
63	427360A1	1	INSERT,
64	427353A1	1	PLATE,
65	427352A1	1	VALVE,
66	427354A1	3	SPACER,
68	86990266	1	BAFFLE,
69	86990663	1	HARNESS,
70	394957A1	1	KIT, ATC Capacitor Filter (Not Shown)
71	398101A1	1	KIT, ATC Filter Linear Driver
28	627-8025	4	BOLT, Hex, M8 x 25, 10.9, M8 x 25; 10.9

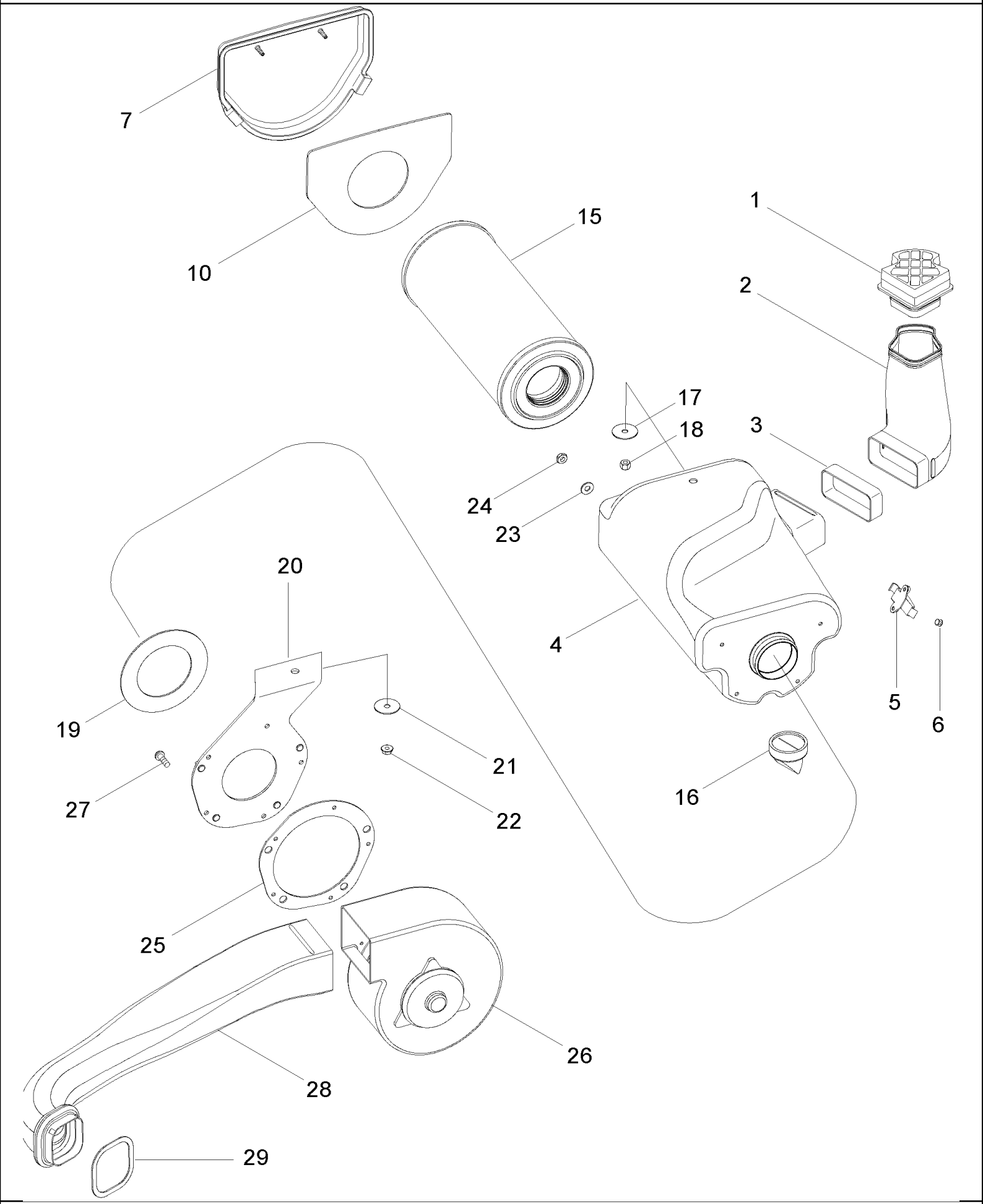
7
10
15
1
2
17
18
3
24
23
20
4
5
6
19
21
27
22
16
25
26
28
29

MX285 CASE IH MAGNUM TRACTOR (NORTH AMERICA)

09-42 AIR CONDITIONING - AIR FILTER

ссылка	Номер детали	Кол-во	Описание
1	255236A3	1	GROMMET,
2	255237A2	1	DUCT, AIR,
3	280951A2	1	SEAL,
	310687A3	1	FILTER, CAB, Inc. 4 - 10
4	NSS	1	NOT SERVICED SEPARATELY, Housing
5	240748A2	2	LATCH,
6	151-539	4	RIVET, Pop, 3/16" x .450", Pop, 3/16 x 7/16
7	255218A4	1	COVER, Inc. 10
10	259339A3	1	GASKET,
15	259288A1	1	FILTER, Air
16	A184597	1	POPPET, VALVE,
17	495-81121	1	WASHER, .344" x 1 1/2" x .060", 11/32 x 1-1/2 x 1/16
18	832-10408	1	NUT, M8 x 1.25, Cl 8, M8; 8
19	255219A2	1	GASKET,
20	252244A2	1	BRACKET,
21	495-81121	1	WASHER, .344" x 1 1/2" x .060", 11/32 x 1-1/2 x 1/16
22	825-2408	1	NUT, M8 x 1.25, Flg, Cl 8,
23	495-31022	4	WASHER, #10,
24	225-14210	4	NUT, #10-32,
25	255220A2	1	GASKET,
26	330137A1	1	BLOWER,
27	490-11010	5	SCREW, Cross Pan Hd, #10-32 x 5/8", No. 10 NF x 5/8
28	255295A3	1	DUCT,
29	280510A2	1	GASKET,

MX285 CASE IH MAGNUM TRACTOR (NORTH AMERICA)

09-43 AIR CONDITIONING - DUCTS

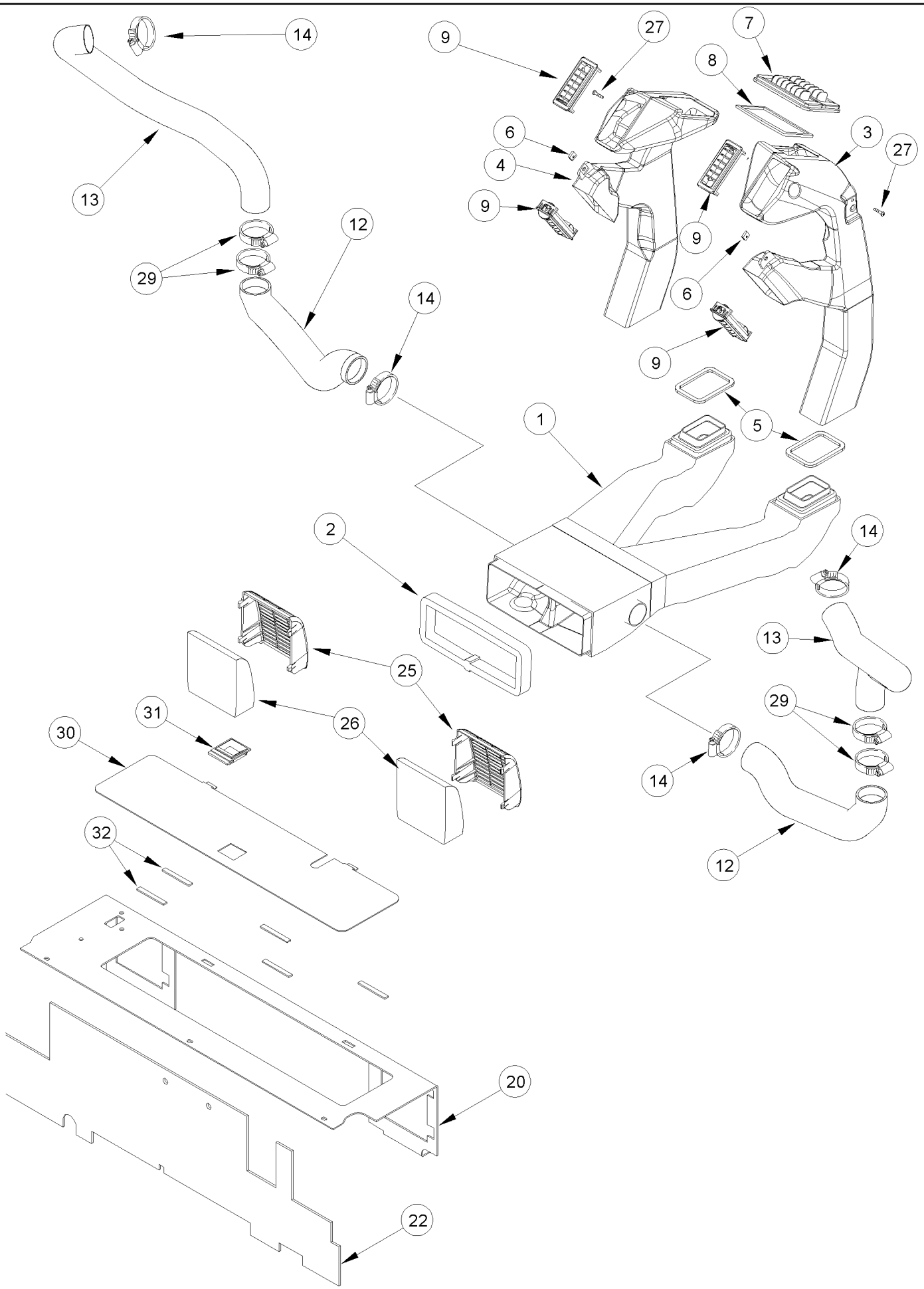

MX285 CASE IH MAGNUM TRACTOR (NORTH AMERICA)

09-43 AIR CONDITIONING - DUCTS

ссылка	Номер детали	Кол-во	Описание
1	330276A3	1	DUCT, Inc. 2, BSN JAZ133183
1	87444943	1	DUCT, Inc. 2, ASN JAZ133183
2	326665A1	1	SEAL,
3	417742A1	1	DUCT, Right Hand, Inc. 6
4	281095A4	1	DUCT, Left Hand, Inc. 6
5	257098A1	2	GASKET,
6	131-839	2	NUT, U, #10-16, Panel type,
7	363930A1	2	DIFFUSER,
8	281084A2	1	GASKET,
9	363881A1	4	VENT, , BSN JAZ132559
9	363931A1	4	VENT, , ASN JAZ132559
12	256331A2	2	HOSE, Right Hand and Left Hand, BSN JAZ133183
12	256331A2	1	HOSE, Left Hand, ASN JAZ133183
13	303732A1	2	HOSE, Right Hand and Left Hand, BSN JAZ133183
13	303732A1	1	HOSE, Left Hand, ASN JAZ133183
14	214-1544	4	CLAMP, HOSE, #44, 2.31/3.25 Type F Worm, W/liner, 2-1/4 x 3-1/8, BSN JAZ133183
14	214-1544	2	CLAMP, HOSE, #44, 2.31/3.25 Type F Worm, W/liner, 2-1/4 x 3-1/8, ASN JAZ133183
20	87404728	1	EXTENSION,
21	781-24820	5	SCREW, SELF TAP, Hex Flg Hd, M8 x 20, M8 x 20
22	86984088	1	INSULATION, FOAM,
24	780-34395	5	SCREW, SELF TAP, Hex Wash Hd, M4.8 x 9.5, M4,8 x 9,5
25	301180A3	2	VENT (AIR),
26	293615A1	2	FILTER,
27	840-1525	2	SCREW, Cross Pan Hd, M5 x 25, M5 x 25
29	214-1544	4	CLAMP, HOSE, #44, 2.31/3.25 Type F Worm, W/liner, 2-1/4 x 3-1/8, BSN JAZ133183
29	214-1544	2	CLAMP, HOSE, #44, 2.31/3.25 Type F Worm, W/liner, 2-1/4 x 3-1/8, ASN JAZ133183
	86984827	1	COVER, Inc. 30 - 32, BSN JAZ133008
	87442171	1	COVER, Inc. 30 - 32, ASN JAZ133008
30	86984822	1	COVER, , BSN JAZ133008
30	87442170	1	COVER, , ASN JAZ133008
31	406718A1	1	LATCH,
32	412425A1	5	SEAL,

MX285 CASE IH MAGNUM TRACTOR (NORTH AMERICA)

09-44 CAB - INSULATION

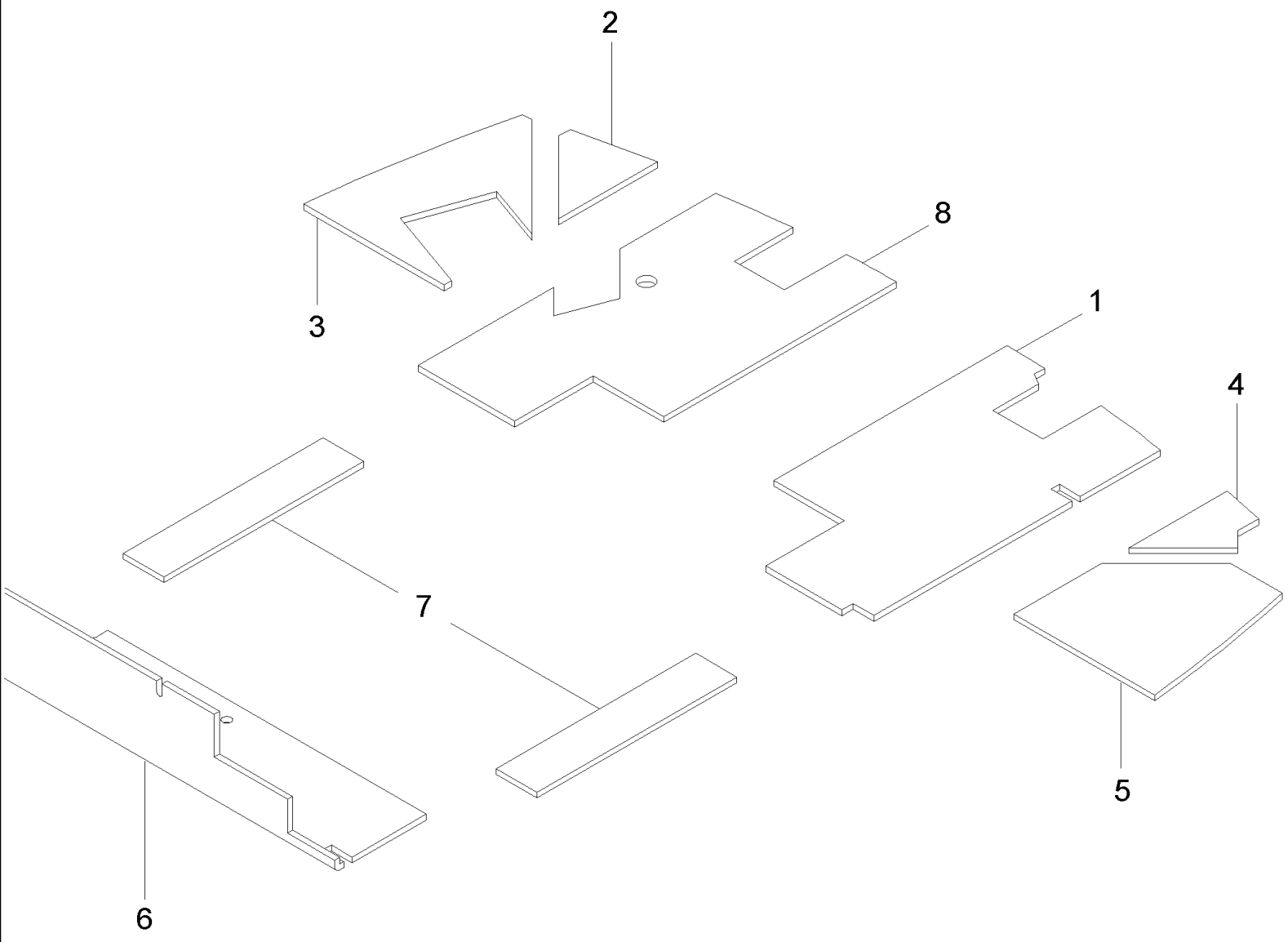

MX285 CASE IH MAGNUM TRACTOR (NORTH AMERICA)

09-44 CAB - INSULATION

ссылка	Номер детали	Кол-во	Описание
1	87430369	1	INSULATION, FOAM, Middle, Right
2	87430372	1	INSULATION, FOAM, Left Front
3	87430373	1	INSULATION, FOAM, Left Rear
4	87430374	1	INSULATION, FOAM, Right Front
5	87430375	1	INSULATION, FOAM, Right Rear
6	87430370	1	INSULATION, FOAM, Middle Rear
7	87430371	2	INSULATION, FOAM, Floor Strip
8	87430368	1	INSULATION, FOAM, Middle, Left

MX285 CASE IH MAGNUM TRACTOR (NORTH AMERICA)

09-45 DRAWBAR AND HAMMERSTRAP - STANDARD

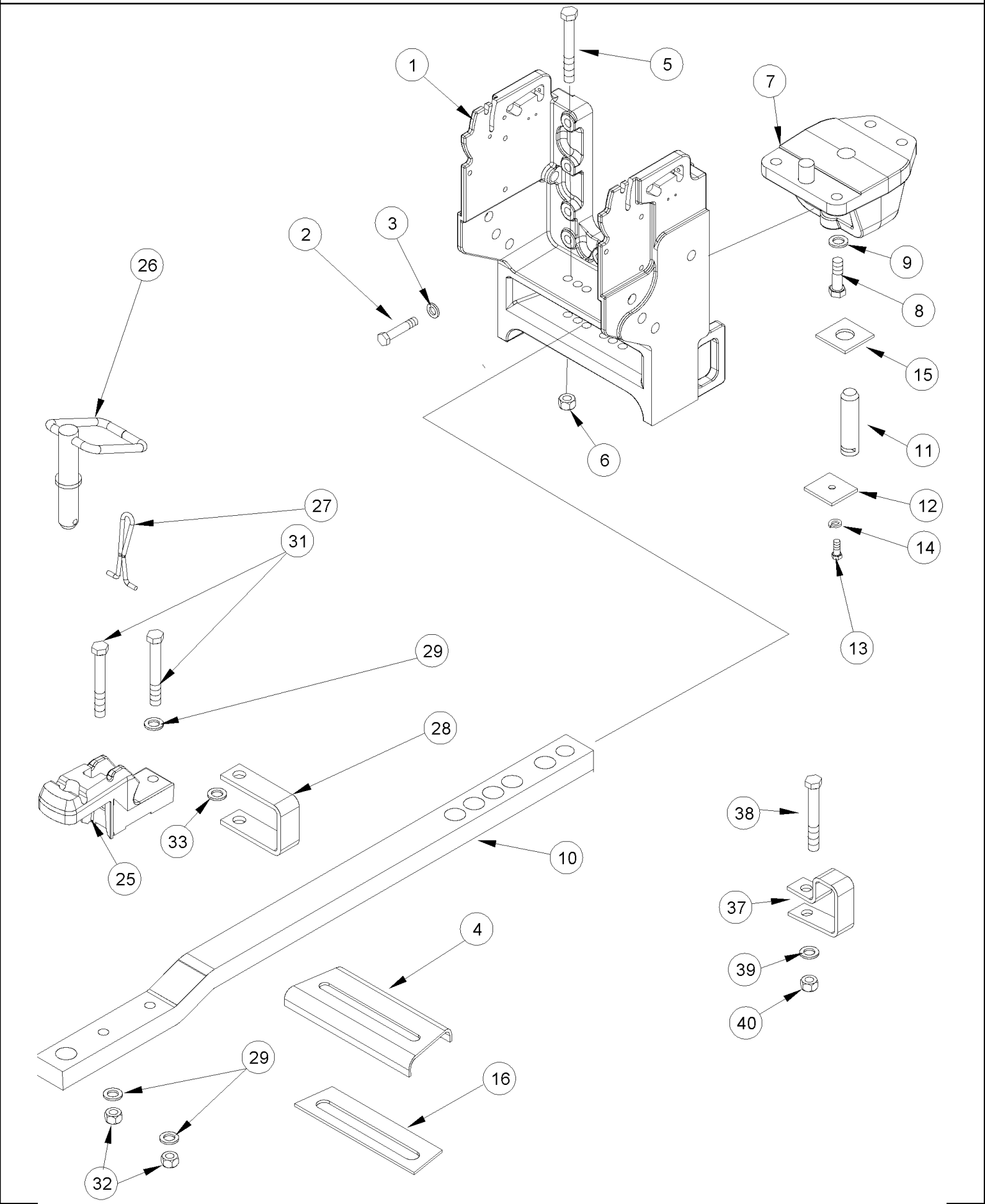

MX285 CASE IH MAGNUM TRACTOR (NORTH AMERICA)

09-45 DRAWBAR AND HAMMERSTRAP - STANDARD

ссылка	Номер детали	Кол-во	Описание
1	251788A3	1	SUPPORT,
2	828-16080	10	BOLT, Hex, M16 x 80, 10.9, Hex, M16 x 80, 10.9
3	896-12016	10	WASHER, M17.5 x 30 x 4, HT, 17,5 x 30 x 4 mm
4	238495A3	1	PLATE,
5	828-16160	2	BOLT, Hex, M16 x 160, 10.9, M16 x 160; 10.9
6	832-10416	2	NUT, LOCK, M16 x 2, Cl 8, M16; 8
7	232968A1	1	SUPPORT,
8	828-20065	4	BOLT, Hex, M20 x 65, 10.9, Full Thd, M20 x 65; 10.9
9	896-12020	4	WASHER, M20 x 37.5 x 4, HT, 22 x 37 x 4 mm
10	232515A1	1	DRAWBAR, , MX210, MX230
10	277702A1	1	DRAWBAR, , MX255, MX285
11	1982103C1	1	PIN,
12	67828C1	1	RETAINER,
13	627-12030	1	BOLT, Hex, M12 x 30, 10.9, M12 x 30; 10.9
14	892-11012	1	WASHER, LOCK, M12, M12
15	307027A1	1	SPACER, Front, MX210, MX230
16	307028A1	1	SPACER, Rear, MX210, MX230
25	232615A3	1	STRAP,
26	232616A3	1	PIN, HITCH,
27	232617A1	1	LATCH,
28	233790A1	1	SUPPORT ASSY.,
29	896-11020	3	WASHER, M20 x 37.5 x 4, HT, 22 x 37 x 4 mm
31	827-20150	2	BOLT, Hex, M20 x 150, 10.9, M20 x 150; 10.9
32	829-1420	2	NUT, M20, Cl 10, M20, Cl 10
33	896-16020	1	WASHER, M20 x 44.5 x 5, HT, 22 x 44 x 5 mm
37	348405A1	1	SUPPORT ASSY.,
38	827-20090	1	BOLT, Hex, M20 x 90, 10.9, M20 x 90; 10.9
39	896-11020	1	WASHER, M20 x 37.5 x 4, HT, 22 x 37 x 4 mm
40	829-1420	1	NUT, M20, Cl 10, M20, Cl 10

MX285 CASE IH MAGNUM TRACTOR (NORTH AMERICA)

09-46 DRAWBAR AND HAMMERSTRAP - HIGH CAPACITY

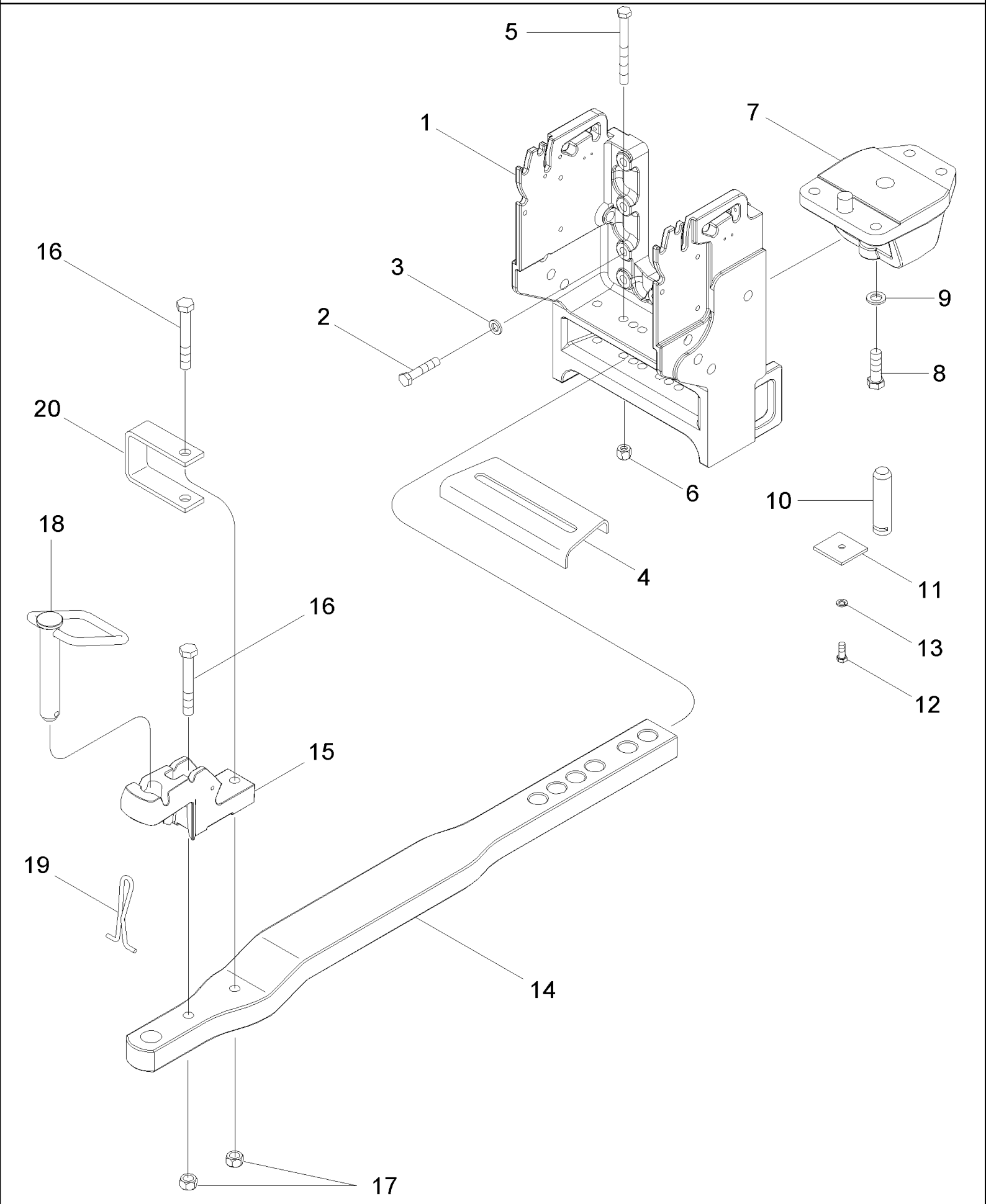

MX285 CASE IH MAGNUM TRACTOR (NORTH AMERICA)

09-46 DRAWBAR AND HAMMERSTRAP - HIGH CAPACITY

ссылка	Номер детали	Кол-во	Описание
1	251788A3	1	SUPPORT,
2	828-16080	10	BOLT, Hex, M16 x 80, 10.9, Hex, M16 x 80, 10.9
3	896-12016	10	WASHER, M17.5 x 30 x 4, HT, 17,5 x 30 x 4 mm
4	238495A3	1	PLATE,
5	828-16160	2	BOLT, Hex, M16 x 160, 10.9, M16 x 160; 10.9
6	832-10416	2	NUT, LOCK, M16 x 2, Cl 8, M16; 8
7	232968A1	1	SUPPORT,
8	828-20065	4	BOLT, Hex, M20 x 65, 10.9, Full Thd, M20 x 65; 10.9
9	896-12020	4	WASHER, M20 x 37.5 x 4, HT, 22 x 37 x 4 mm
10	1982103C1	1	PIN,
11	67828C1	1	RETAINER,
12	627-12030	1	BOLT, Hex, M12 x 30, 10.9, M12 x 30; 10.9
13	892-11012	1	WASHER, LOCK, M12, M12
14	426511A1	1	DRAWBAR, SWINGING,
15	232615A3	1	STRAP,
16	827-20140	2	BOLT, Hex, M20 x 140, 10.9, M20 x 140; 10.9
17	829-1420	2	NUT, M20, Cl 10, M20, Cl 10
18	232616A3	1	PIN, HITCH,
19	232617A1	1	LATCH,
20	449666A1	1	SUPPORT ASSY.,

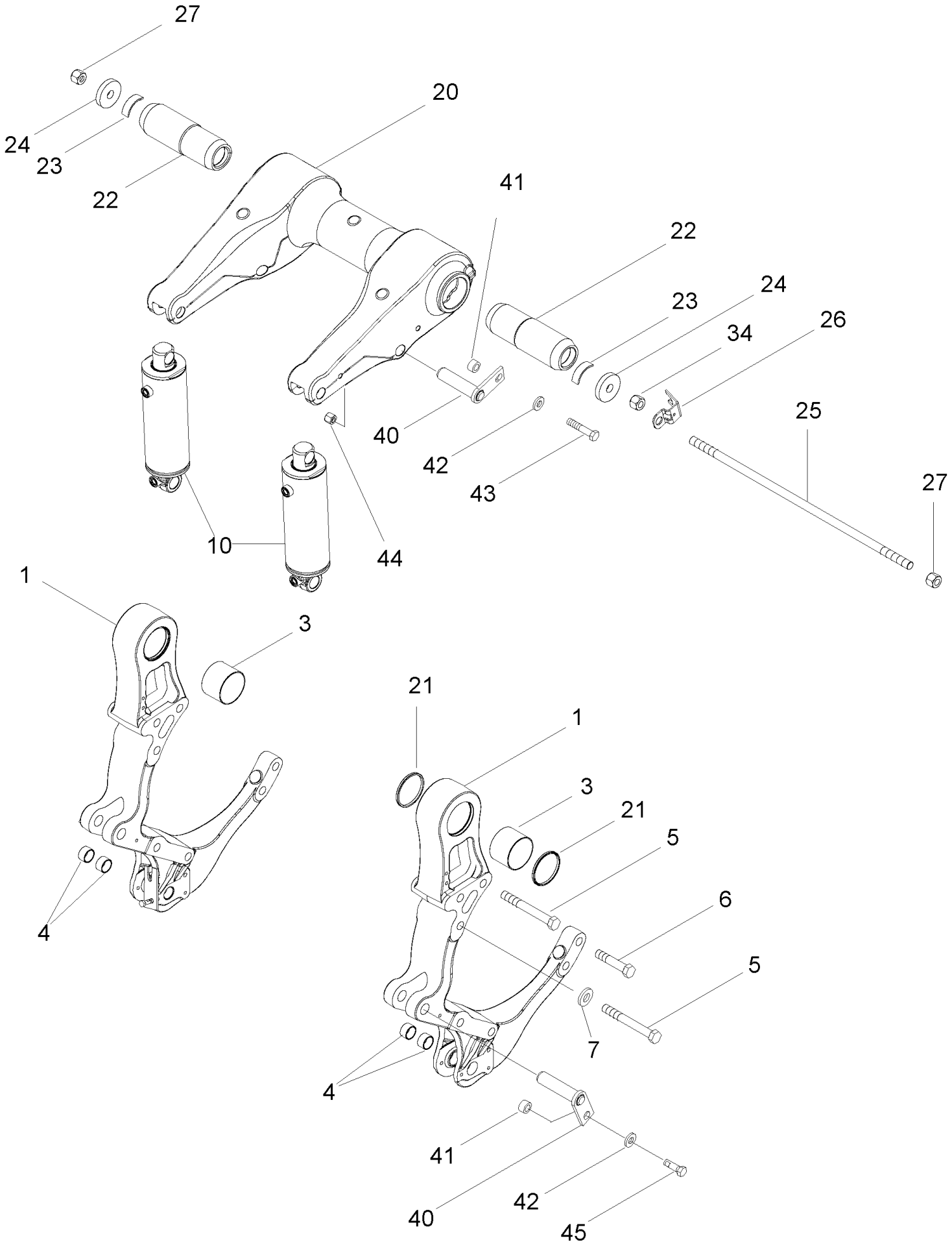
27
24
23
22
20
41
22
24
23
34
26
25
40
42
43
27
10
44
1
3
21
1
3
21
5
6
5
4
7
4
41
40
42
45

MX285 CASE IH MAGNUM TRACTOR (NORTH AMERICA)

09-47 HITCH - SUPPORTS AND ROCKSHAFT

ссылка	Номер детали	Кол-во	Описание
1	302887A5	2	BRACKET,
3	222355A1	1	BUSHING,
4	1960223C1	2	BUSHING,
5	828-24200	10	BOLT, Hex, M24 x 200, 10.9, M24 x 200; 10.9
6	828-24120	4	BOLT, Hex, M24 x 120, 10.9, M24 x 120; 10.9
7	896-16024	2	WASHER, M24 x 56.5 x 6, HT,
10	305002A2	AR	CYLINDER, 89 ID x 260 mm strk, Part Number Stamped On Cylinder, See Figure 08-23
10	278277A3	AR	CYLINDER ASSY., 95 ID x 260 mm strk, Part Number Stamped On Cylinder, See Figure 08-24
10	278419A3	AR	CYLINDER, 105 ID x 260 mm strk, Part Number Stamped On Cylinder, See Figure 08-25
20	413467A1	2	BRACKET, HITCH,
21	222354A1	4	SEAL,
22	251386A1	2	PIN,
23	220598A3	6	RING, SNAP,
24	220599A2	2	WASHER,
25	220600A2	1	ROD,
26	241889A3	1	SUPPORT,
27	832-10424	2	NUT, LOCK, M24 x 3, Cl 8, M24; 8
34	829-1424	1	NUT, M24, Cl 10, M24; 10
40	391415A1	4	PIN,
41	321365A1	4	SPACER,
42	896-15012	4	WASHER, M12 x 28.5 x 4, HT, 13,5 x 28 x 4 mm
43	814-12060	2	BOLT, Hex, M12 x 60, 8.8, M12 x 60; 8.8
44	832-10412	2	NUT, LOCK, M12 x 1.75, Cl 8, M12; 8
45	806-12035	2	BOLT, Hex, Lock, M12 x 35, Cl 10.9, M12 x 35; 10.9

MX285 CASE IH MAGNUM TRACTOR (NORTH AMERICA)

09-48 HITCH - TOP LINK

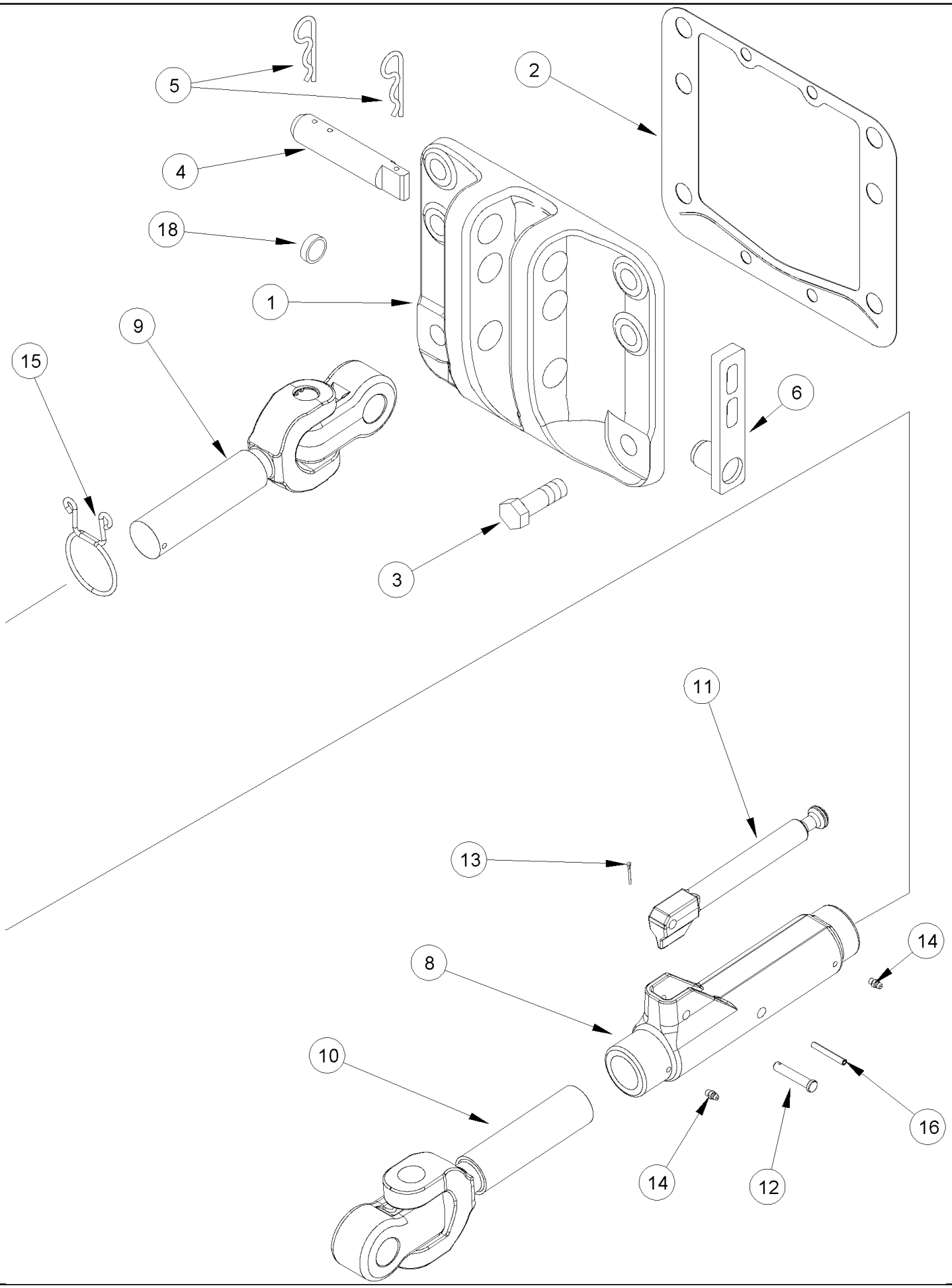

MX285 CASE IH MAGNUM TRACTOR (NORTH AMERICA)

09-48 HITCH - TOP LINK

ссылка	Номер детали	Кол-во	Описание
1	377206A2	1	SUPPORT,
2	379145A1	1	GASKET,
3	628-20060	6	BOLT, Hex, M20 x 60, 10.9, Full Thd, M20 x 60; 10.9
4	378929A1	1	PIN,
5	486830R1	2	PIN, SPLIT (COTTER),
6	378932A1	1	PIN,
8	310524A3	1	TURNBUCKLE,
9	319585A1	1	CLEVIS, Right Hand Threads
10	319586A1	1	CLEVIS, Left Hand Threads
11	310944A1	1	HANDLE,
12	427-6200	1	PIN, CLEVIS, 3/8" x 2", 3/8 x 2.0
13	432-612	1	PIN, SPLIT (COTTER), 3/32" x 3/4", 3/32" x 3/4"
14	219-87	2	NIPPLE, LUBE, 1/4"-28 x .56" lg, Drive,
15	315912A1	1	SPRING,
16	838-3645	1	PIN, M6 x 45, Coiled, 6 x 45 mm
18	641-3432	3	PLUG, M32, Conical, 32 mm

09-48A CYLINDER ASSEMBLY - HYDRAULIC TOP LINK - HITCH

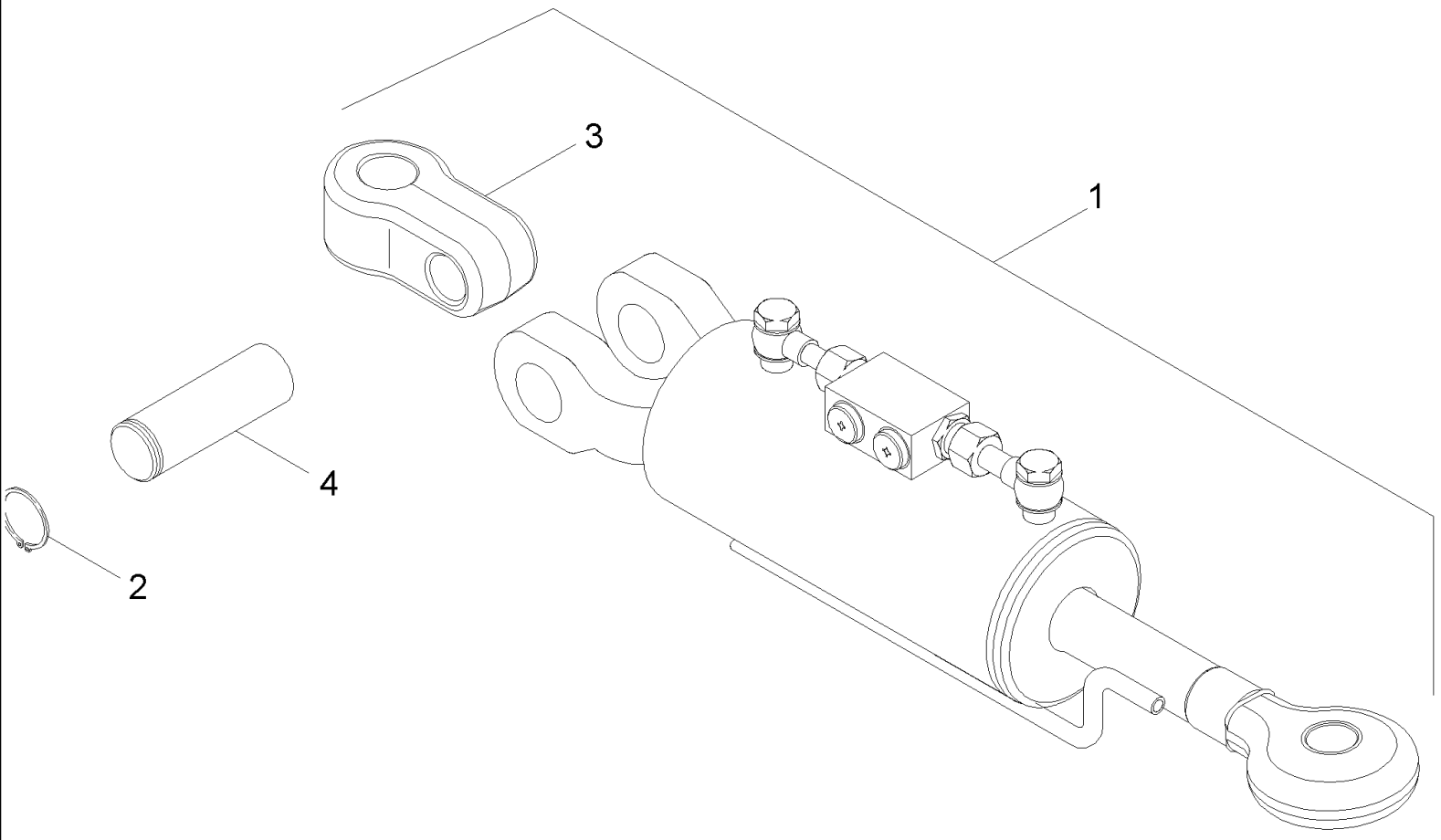

MX285 CASE IH MAGNUM TRACTOR (NORTH AMERICA)

09-48A CYLINDER ASSEMBLY - HYDRAULIC TOP LINK - HITCH

ссылка	Номер детали	Кол-во	Описание
1	87453964	1	LINK, TOP, Short, Used With Short Draft Arms, 970 mm (38 in) Center To Center, Inc. 2 - 5
2	800-2128	2	RING, SNAP, M28, Int,
3	283235A3	1	CLEVIS
4	310476A2	1	PIN
5	5197835	1	KIT, Seal, (Not Shown)

09-48B CYLINDER ASSEMBLY - HYDRAULIC TOP LINK - HITCH

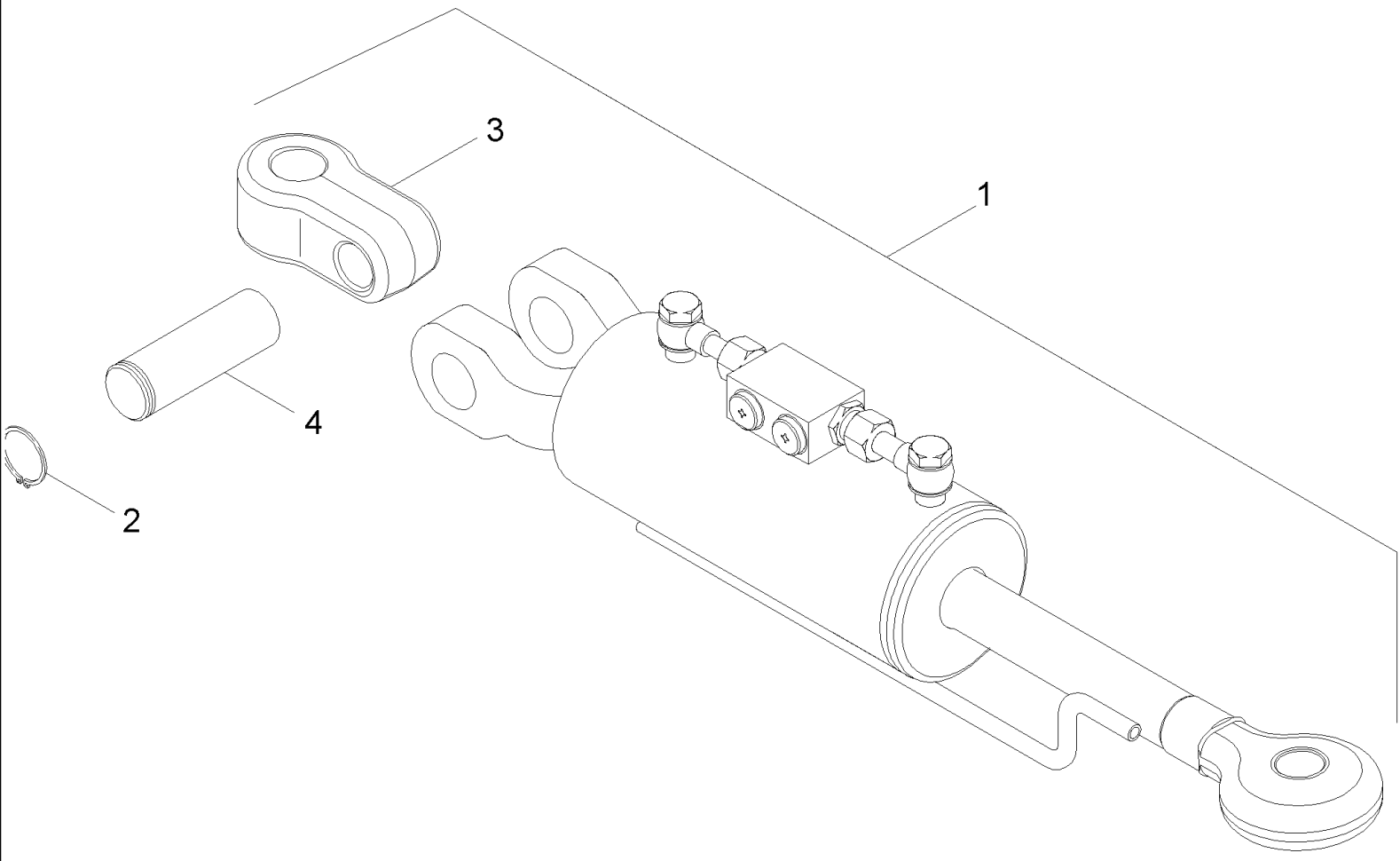

MX285 CASE IH MAGNUM TRACTOR (NORTH AMERICA)

09-48B CYLINDER ASSEMBLY - HYDRAULIC TOP LINK - HITCH

ссылка	Номер детали	Кол-во	Описание
1	87452848	1	LINK, TOP, Long, Used With Long Draft Arms, 1094 mm (43 in) Center To Center, Inc. 2 - 5
2	800-2128	2	RING, SNAP, M28, Int,
3	283235A3	1	CLEVIS
4	310476A2	1	PIN
5	5197835	1	KIT, Seal, (Not Shown)

09-49 HITCH - LIFT LINKS

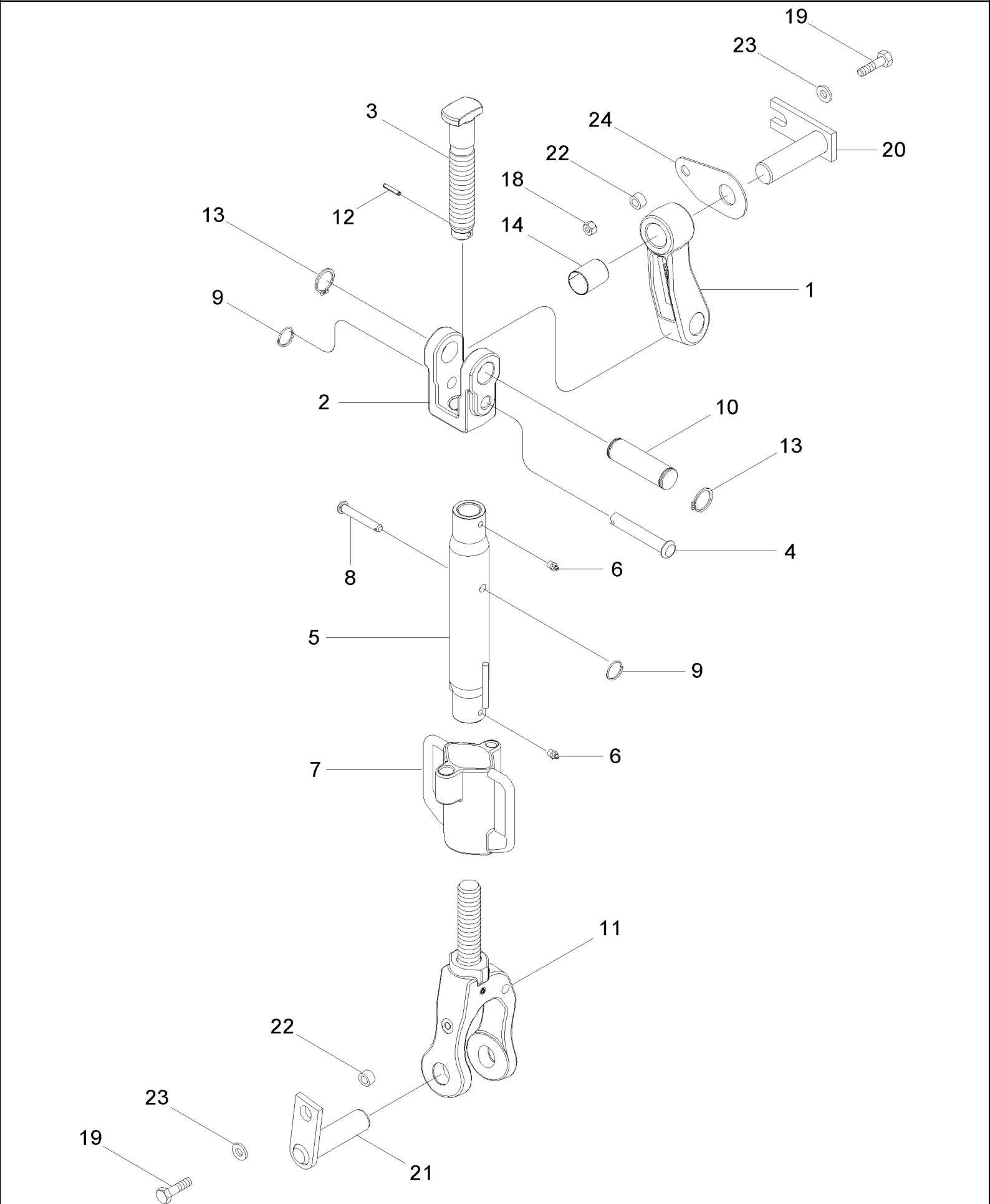

MX285 CASE IH MAGNUM TRACTOR (NORTH AMERICA)

09-49 HITCH - LIFT LINKS

ссылка	Номер детали	Кол-во	Описание
1	405361A1	2	PITMAN,
2	405362A2	2	YOKE,
3	412533A1	2	ROD,
4	412534A1	2	PIN,
5	405370A1	2	TURNBUCKLE,
6	378716A1	4	NIPPLE, LUBE,
7	405364A1	2	HANDLE,
8	728-1280	2	PIN, CLEVIS, M12 x 80, 12 X 80 mm
9	307431A1	4	RING, SNAP,
10	412536A2	2	PIN,
11	405366A1	2	ROD,
12	738-1632	2	PIN, M6 x 32, Slotted, 6 x 32 mm
13	800-5135	4	RING, SNAP, M35, Ext, Hvy, 35 mm
14	237443A1	2	BUSHING,
18	832-10412	2	NUT, LOCK, M12 x 1.75, Cl 8, M12; 8
19	827-12050	4	BOLT, Hex, M12 x 50, 10.9, M12 x 50; 10.9
20	321367A3	2	PIN ASSY.,
21	414696A1	2	PIN ASSY.,
22	321365A1	4	SPACER,
23	896-15012	4	WASHER, M12 x 28.5 x 4, HT, 13,5 x 28 x 4 mm
24	255803A2	AR	SHIM,

09-49A CYLINDER ASSEMBLY - HYDRAULIC LIFT LINK - HITCH, RIGHT HAND

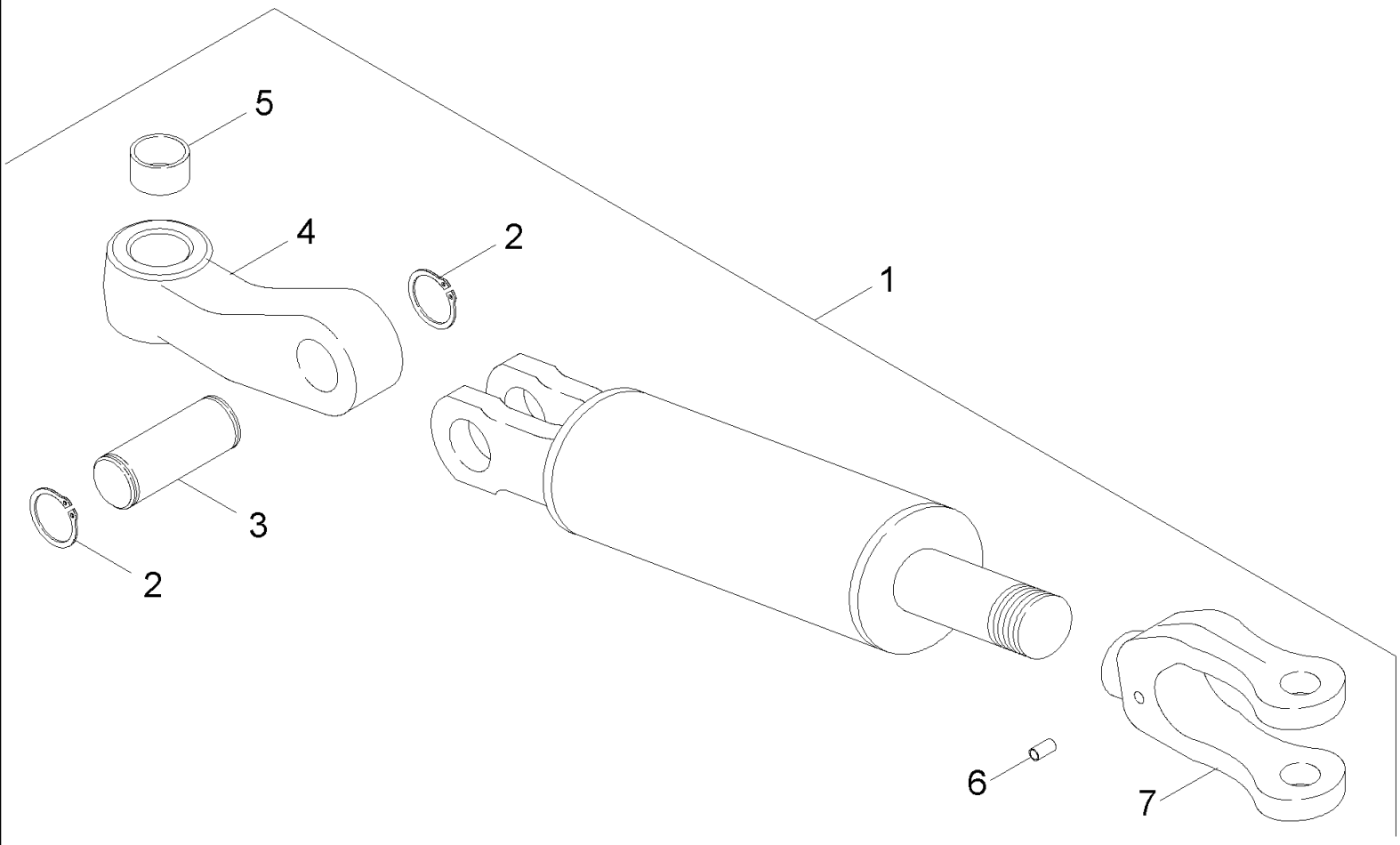

MX285 CASE IH MAGNUM TRACTOR (NORTH AMERICA)

09-49A CYLINDER ASSEMBLY - HYDRAULIC LIFT LINK - HITCH, RIGHT HAND

ссылка	Номер детали	Кол-во	Описание
1	87424887	1	LINK, TOP, Inc. 2 - 8
2	800-5135	2	RING, SNAP, M35, Ext, Hvy, 35 mm
3	412536A2	1	PIN,
4	405361A1	1	PITMAN,
5	237443A1	1	BUSHING,
6	838-3860	1	PIN, M8 x 60, Slotted,
7	405363A1	1	
8	5197835	1	KIT, Seal, (Not Shown)

MX285 CASE IH MAGNUM TRACTOR (NORTH AMERICA)

09-50 HITCH - LOWER LIFT LINKS

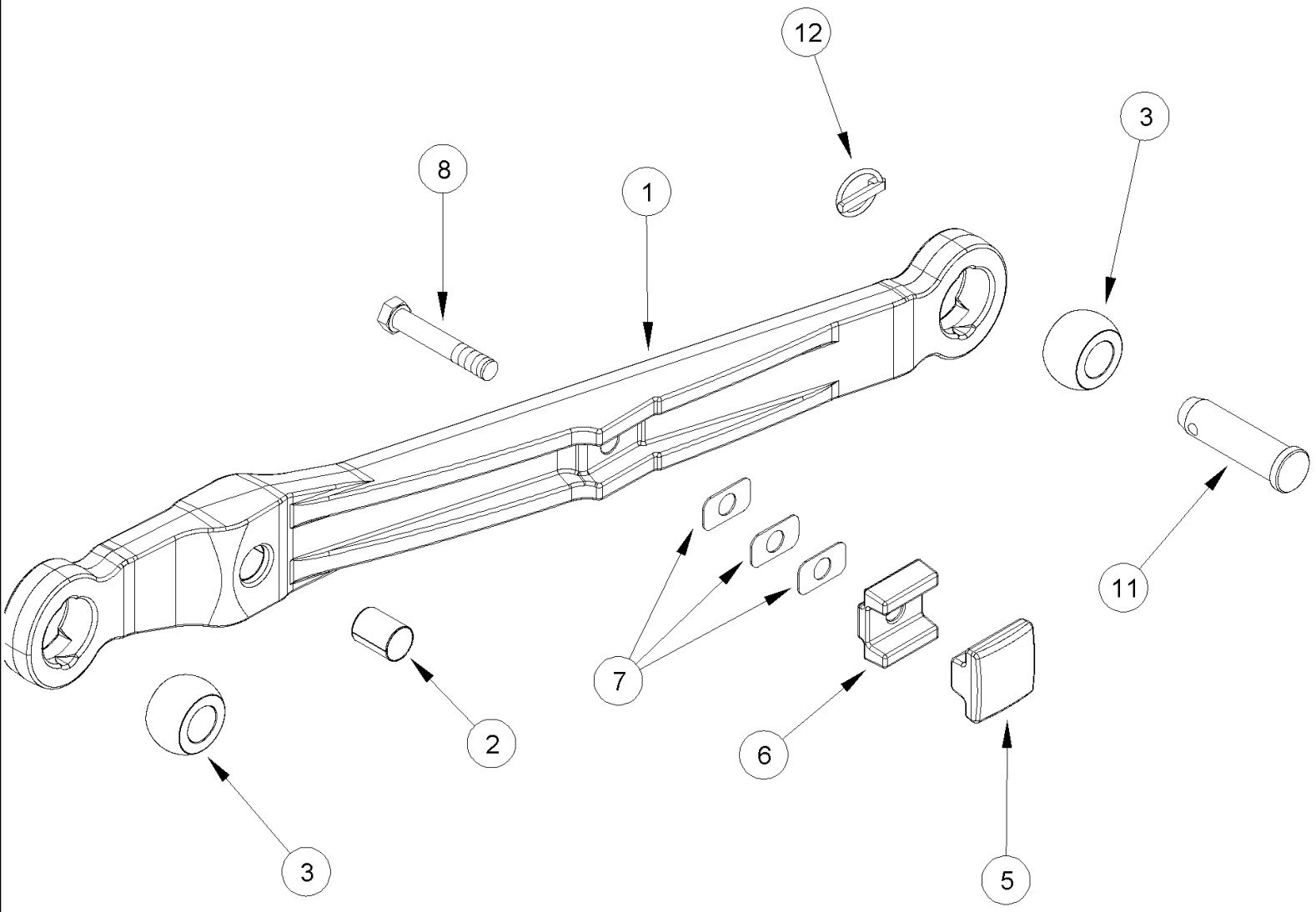

MX285 CASE IH MAGNUM TRACTOR (NORTH AMERICA)

09-50 HITCH - LOWER LIFT LINKS

ссылка	Номер детали	Кол-во	Описание
	320473A1	2	LINK, LOWER, Short Draft Arms, 970 mm (38 in) Center To CenterInc. 1 - 3
1	NSS	1	NOT SERVICED SEPARATELY, Arm
2	237443A1	1	BUSHING,
3	231298A1	2	BALL JOINT,
5	283291A4	2	BUMPER,
6	281805A4	2	SPACER,
7	238141A2	6	SHIM,
8	607-20120	2	BOLT, Hex, Lock, M20 x 120, Cl 10.9, M20 x 120; 10.9
11	A75028	2	PIN, , Without Draft Control
12	378704A1	2	PIN,

MX285 CASE IH MAGNUM TRACTOR (NORTH AMERICA)

09-50A HITCH - LOWER LIFT LINKS

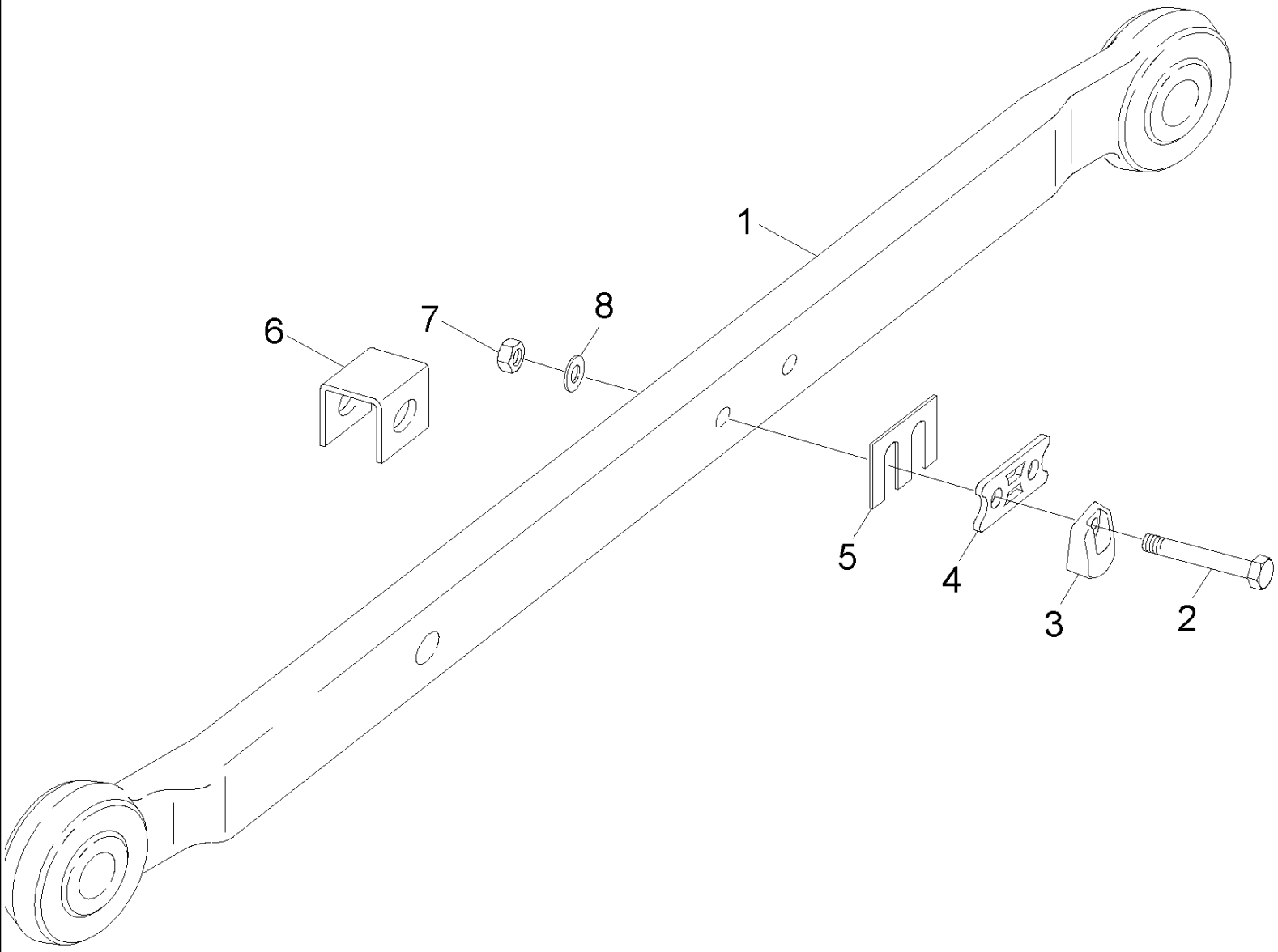

MX285 CASE IH MAGNUM TRACTOR (NORTH AMERICA)

09-50A HITCH - LOWER LIFT LINKS

ссылка	Номер детали	Кол-во	Описание
1	433469A1	2	LINK, LOWER, Long Draft Arms, 1094 mm (43 in) Center To Center
2	827-20130	4	BOLT, Hex, M20 x 130, 10.9,
3	301248A2	2	BUMPER,
4	301927A1	2	SPACER,
5	189946A1	4	SHIM,
6	293002A1	2	SPACER,
7	832-10420	4	NUT, M20 x 2.5, Cl 8,
8	896-11020	4	WASHER, M20 x 37.5 x 4, HT,

MX285 CASE IH MAGNUM TRACTOR (NORTH AMERICA)

09-51 HITCH - SWAY LIMITER

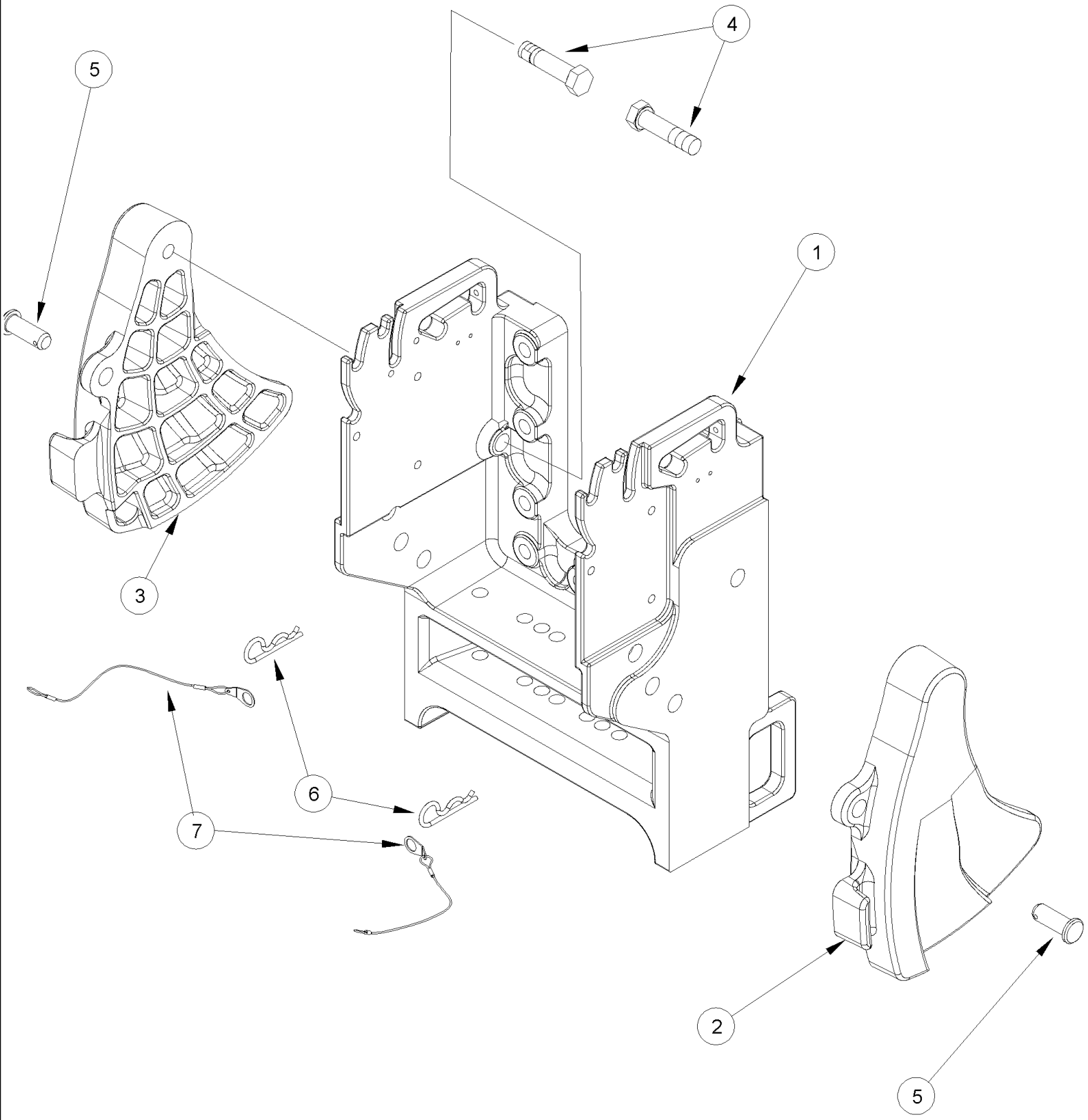

MX285 CASE IH MAGNUM TRACTOR (NORTH AMERICA)

09-51 HITCH - SWAY LIMITER

ссылка	Номер детали	Кол-во	Описание
1	251788A3	1	SUPPORT,
2	293792A5	1	CAM, Right Hand
3	293789A5	1	CAM, Left Hand
4	804-20080	2	BOLT, Hex, Lock, M20 x 80, Cl 10.9, M20 x 80; 10,9
5	439-11236	2	PIN, HEADED, 3/4" x 2 1/4", 3/4 x 2-1/4
6	1978738C1	2	PIN, SPLIT (COTTER), 3/16
7	336494A1	2	CHAIN, Europe Only

MX285 CASE IH MAGNUM TRACTOR (NORTH AMERICA)

09-52 HITCH - POSITION SENSOR

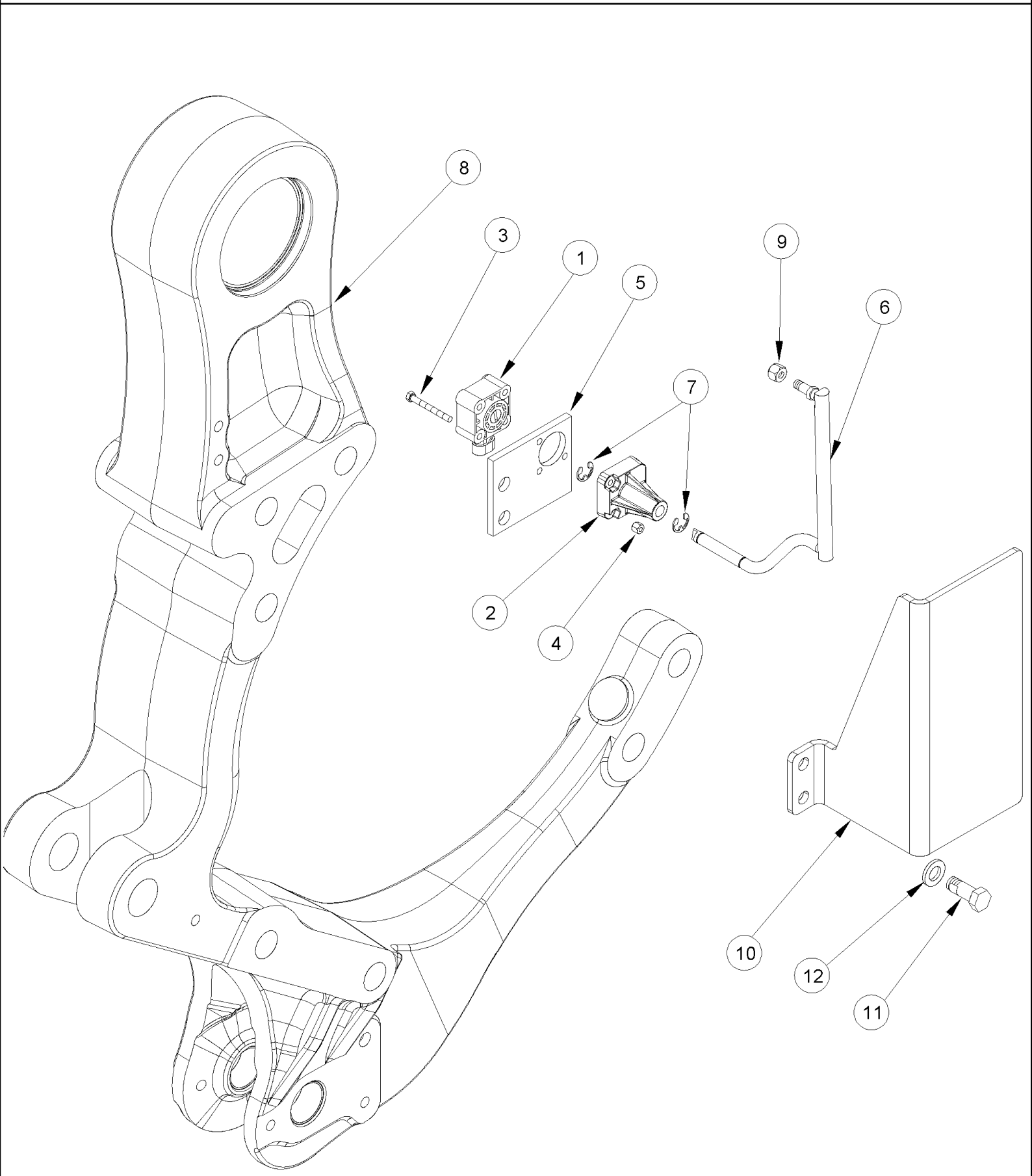

MX285 CASE IH MAGNUM TRACTOR (NORTH AMERICA)

09-52 HITCH - POSITION SENSOR

сылка	Номер детали	Кол-во	Описание
1	283659A1	1	SENSOR,
2	305020A2	1	BUSHING,
3	614-5045	3	BOLT, Hex, M5 x 45, 8.8, Full Thd, M5 x 45; 8.8
4	832-10405	3	NUT, LOCK, M5 x .8, Cl 8, M5
5	300385A1	1	SUPPORT,
6	242489A3	1	LINK, CONNECTING,
7	800-4310	2	CIRCLIP, M10, 10 mm
8	302887A4	1	BRACKET,
9	832-10408	1	NUT, M8 x 1.25, Cl 8, M8; 8
10	242543A5	1	PROTECTION PLATE,
11	805-12030	2	BOLT, Hex, Lock, M12 x 30, Cl 10.9, M12 x 30; 10.9
12	896-11012	2	WASHER, M13.5 x 24.5 x 3, HT, 13,5 x 24 x 3 mm

MX285 CASE IH MAGNUM TRACTOR (NORTH AMERICA)

09-53 HITCH - DRAFT CONTROL PINS

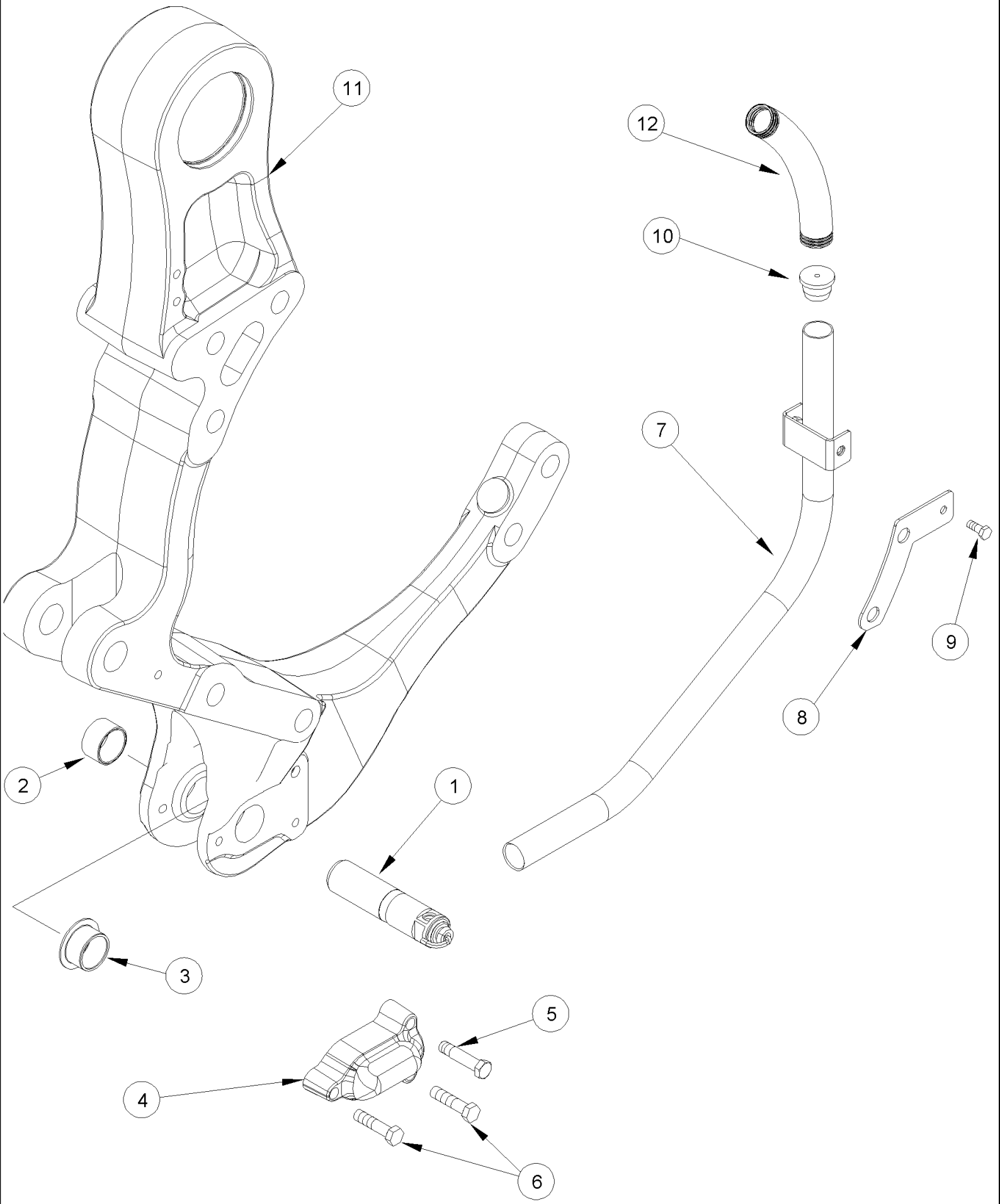

MX285 CASE IH MAGNUM TRACTOR (NORTH AMERICA)

09-53 HITCH - DRAFT CONTROL PINS

ссылка	Номер детали	Кол-во	Описание
	322022A1	2	KIT, Repair, Inc. 1 - 3
1	NSS	1	NOT SERVICED SEPARATELY, Pin, Draft Control
2	1960223C1	2	BUSHING,
3	303550A1	1	BUSHING,
4	291895A4	2	COVER,
5	225643A1	2	BOLT,
6	827-12050	4	BOLT, Hex, M12 x 50, 10.9, M12 x 50; 10.9
7	236897A2	2	PIPE,
8	229904A2	2	SUPPORT,
9	614-8020	2	BOLT, Hex, M8 x 20, 8.8, M8 x 20; 8.8
10	1960765C2	2	GROMMET,
11	302887A4	2	BRACKET,
12	326827A1	2	SLEEVE,

MX285 CASE IH MAGNUM TRACTOR (NORTH AMERICA)

09-54 QUICK HITCH COUPLER - CONVERTIBLE, CATEGORY III / III-N, BSN JAZ139487

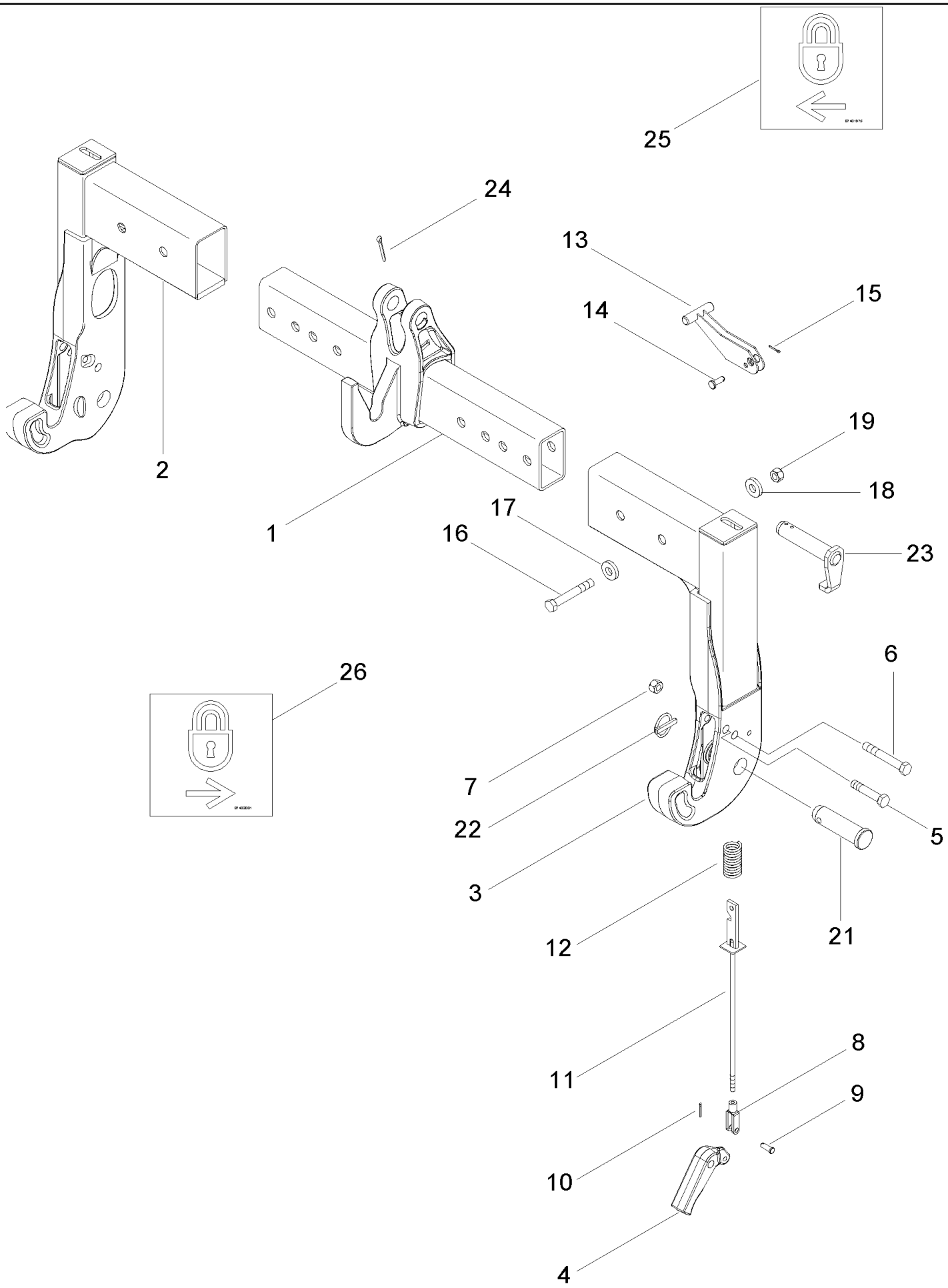

MX285 CASE IH MAGNUM TRACTOR (NORTH AMERICA)

09-54 QUICK HITCH COUPLER - CONVERTIBLE, CATEGORY III / III-N, BSN JAZ139487

ссылка	Номер детали	Кол-во	Описание
	300949A9	1	COUPLING, Inc. 1 - 20, 25, 26
1	301795A5	1	HOOK, Upper
2	376713A3	1	HOOK, Lower, Left Hand
3	376714A3	1	HOOK, Lower, Right Hand
4	297598A1	2	LATCH,
5	827-16080	2	BOLT, Hex, M16 x 80, 10.9, Hex, M16 x 80, 10.9
6	827-16110	2	BOLT, Hex, M16 x 110, 10.9, M16 x 110; 10.9
7	829-1416	2	NUT, M16, Cl 10, M16; 10
8	213-126	2	CLEVIS, ADJUSTABLE, 3/8"-24 x 2 1/2", 3/8 NF
9	427-6106	2	PIN, CLEVIS, 3/8" x 1 1/16", 3/8 x 1-1/16
10	432-616	2	PIN, SPLIT (COTTER), 3/32" x 1",
11	446219A1	2	LINK ASSY.,
12	70-4340T1	2	SPRING,
13	315227A1	2	HANDLE,
14	729-1030	2	PIN, CLEVIS, M10 x 30, 10 x 30 mm
15	733-3220	2	PIN, SPLIT (COTTER), M3.2 x 20, 3,2 x 20 mm
16	827-20130	4	BOLT, Hex, M20 x 130, 10.9, M20 x 130; 10.9
17	896-11020	4	WASHER, M20 x 37.5 x 4, HT, 22 x 37 x 4 mm
18	372189A1	4	SPACER,
19	832-10420	4	NUT, M20 x 2.5, Cl 8, M20; 8
21	A75028	2	PIN,
22	378704A1	2	PIN,
23	321527A3	1	PIN ASSY.,
24	733-6350	1	PIN, SPLIT (COTTER), M6.3 x 50, 6,3 x 50 mm
25	87401975	1	DECAL, Right Hand
26	87402001	1	DECAL, Left Hand

MX285 CASE IH MAGNUM TRACTOR (NORTH AMERICA)

09-54A QUICK HITCH COUPLER - CONVERTIBLE, CATEGORY III / III-N, ASN JAZ139487

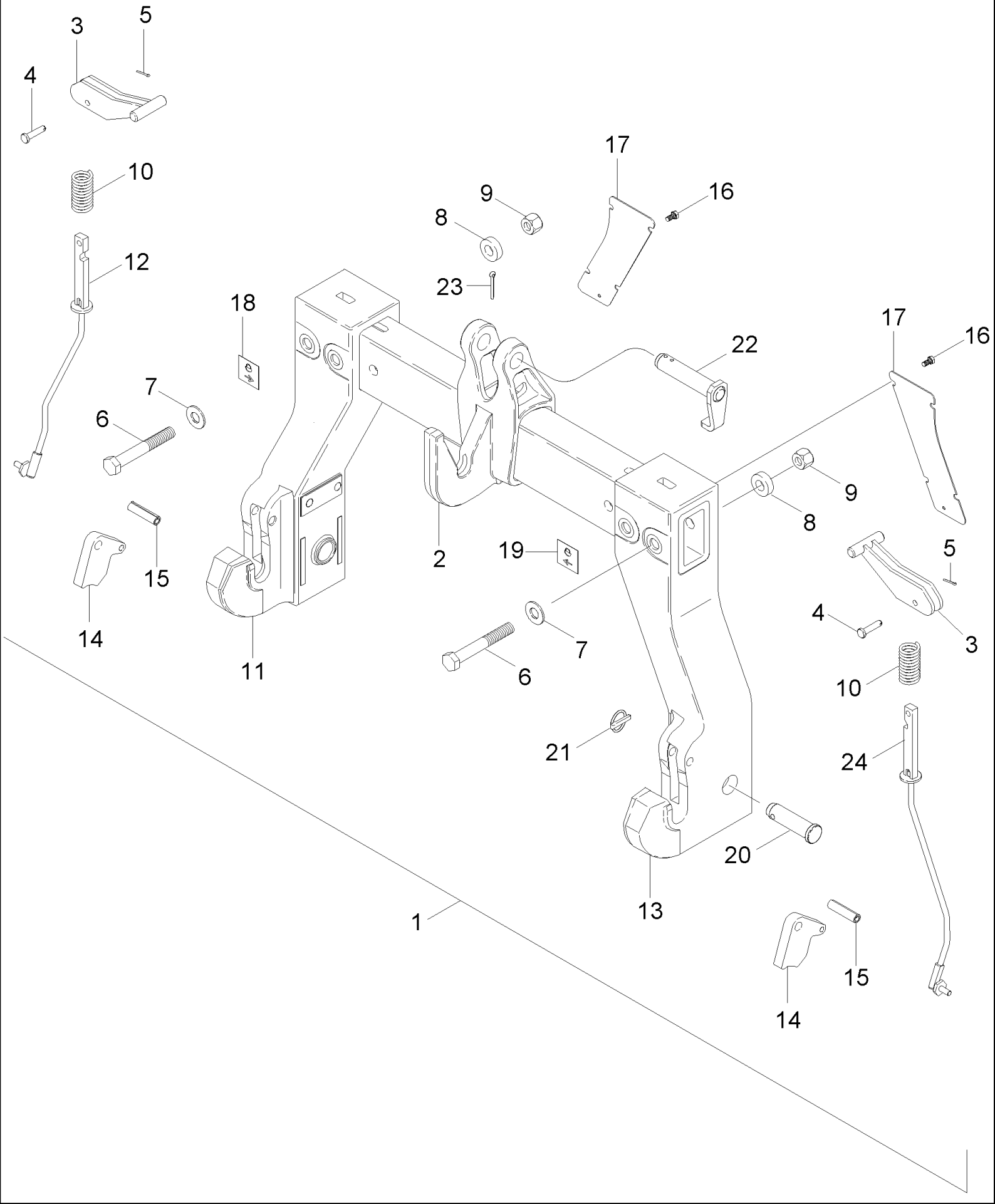

MX285 CASE IH MAGNUM TRACTOR (NORTH AMERICA)

09-54A QUICK HITCH COUPLER - CONVERTIBLE, CATEGORY III / III-N, ASN JAZ139487

ссылка	Номер детали	Кол-во	Описание
1	87332476	1	3 POINT HITCH, Inc. 2 - 19
2	87309289	1	HOOK, Coupler, Quick
3	452046A1	2	HANDLE,
4	728-1045	2	PIN, CLEVIS, M10 x 45, 10 x 30 mm
5	733-3220	2	PIN, SPLIT (COTTER), M3.2 x 20,
6	827-20140	4	BOLT, Hex, M20 x 140, 10.9,
7	896-11020	4	WASHER, M20 x 37.5 x 4, HT,
8	372189A1	4	SPACER,
9	832-10420	4	NUT, M20 x 2.5, Cl 8,
10	70-4340T1	2	SPRING,
11	87330093	1	HOOK, Left Hand
12	87309294	1	LINK, Left Hand
13	87330094	1	HOOK, Right Hand
14	448834A3	2	LATCH,
15	87012660	2	PIN, M16 x 65, Coiled,
16	614-8016	8	BOLT, Hex, M8 x 16, 8.8,
17	87332477	2	COVER,
18	87402001	1	DECAL, Left Hand
19	87401975	1	DECAL, Right Hand
20	A75028	2	PIN,
21	378704A1	2	PIN,
22	321527A3	1	PIN ASSY.,
23	733-6350	1	PIN, SPLIT (COTTER), M6.3 x 50,
24	87309296	1	LINK ASSY., Right Hand

MX285 CASE IH MAGNUM TRACTOR (NORTH AMERICA)

09-55 QUICK HITCH COUPLER - FIXED, CATEGORY III, BSN JAZ139487

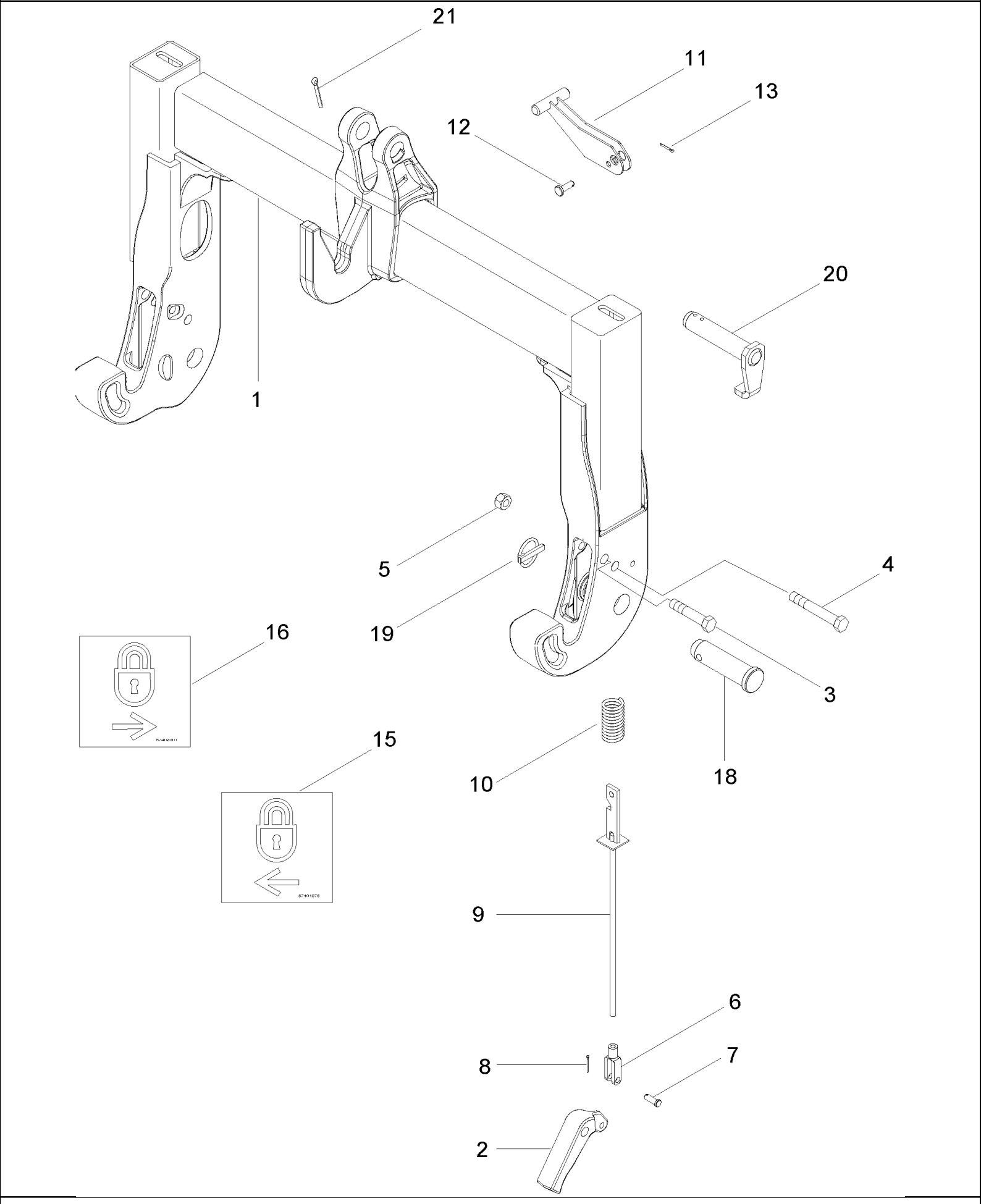

MX285 CASE IH MAGNUM TRACTOR (NORTH AMERICA)

09-55 QUICK HITCH COUPLER - FIXED, CATEGORY III, BSN JAZ139487

ссылка	Номер детали	Кол-во	Описание
	300948A8	1	COUPLING, Inc. 1 - 16
1	NSS	1	NOT SERVICED SEPARATELY, Coupler, Quick
2	297598A1	2	LATCH,
3	827-16080	2	BOLT, Hex, M16 x 80, 10.9, Hex, M16 x 80, 10.9
4	827-16110	2	BOLT, Hex, M16 x 110, 10.9, M16 x 110; 10.9
5	829-1416	2	NUT, M16, Cl 10, M16; 10
6	213-126	2	CLEVIS, ADJUSTABLE, 3/8"-24 x 2 1/2", 3/8 NF
7	427-6106	2	PIN, CLEVIS, 3/8" x 1 1/16", 3/8 x 1-1/16
8	432-616	2	PIN, SPLIT (COTTER), 3/32" x 1",
9	446219A1	2	LINK ASSY.,
10	70-4340T1	2	SPRING,
11	315227A1	2	HANDLE,
12	729-1030	2	PIN, CLEVIS, M10 x 30, 10 x 30 mm
13	733-3220	2	PIN, SPLIT (COTTER), M3.2 x 20, 3,2 x 20 mm
15	87401975	1	DECAL, Right Hand
16	87402001	1	DECAL, Left Hand
18	A75028	2	PIN,
19	378704A1	2	PIN,
20	321527A3	1	PIN ASSY.,
21	733-6350	1	PIN, SPLIT (COTTER), M6.3 x 50, 6,3 x 50 mm

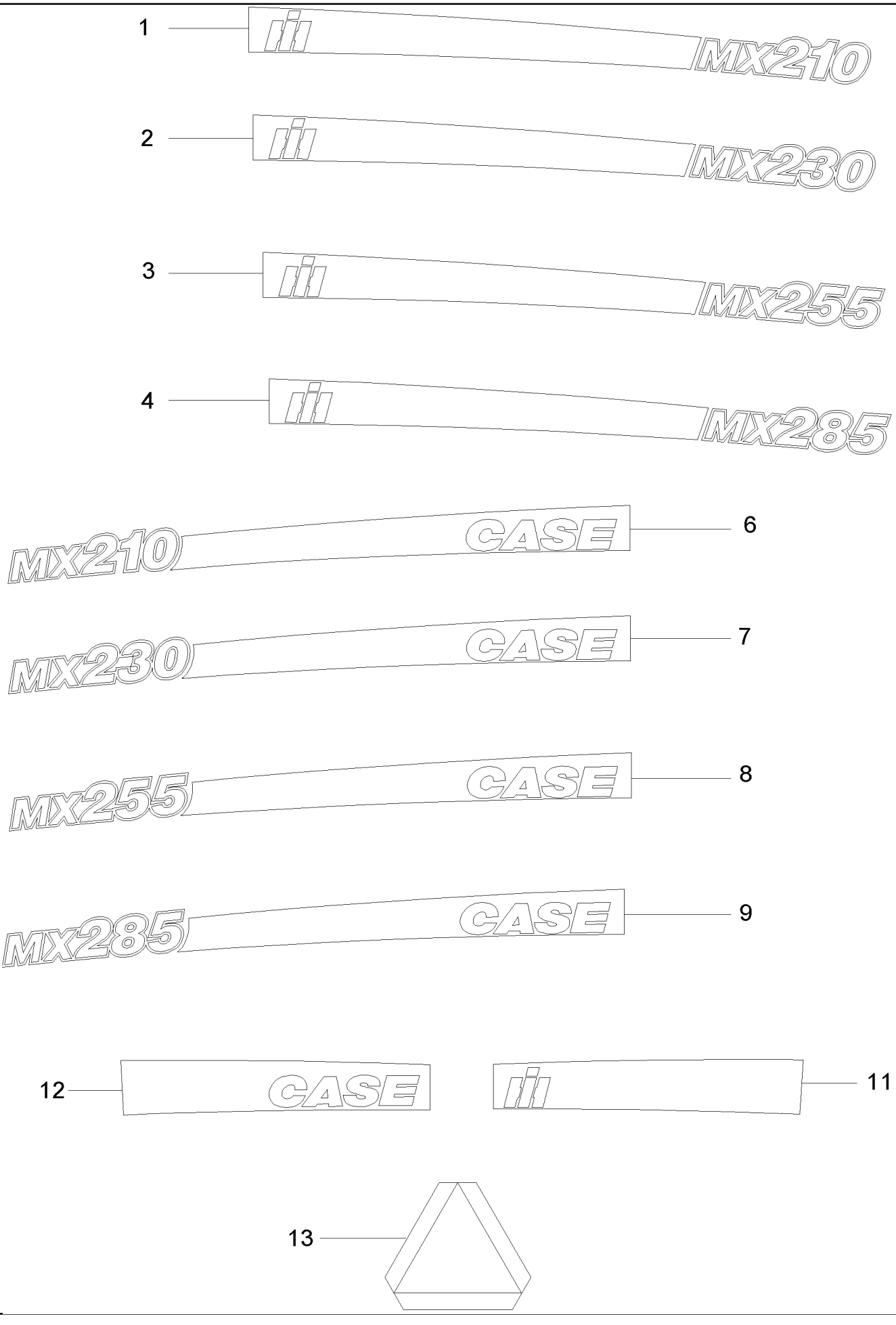
1
MX210
2
MX230
3
MX255
4
MX285
MX210
CASE
6
MX230
CASE
7
MX255
CASE
8
MX285
CASE
9
12
CASE
11
13

MX285 CASE IH MAGNUM TRACTOR (NORTH AMERICA)

09-56 DECALS

ссылка	Номер детали	Кол-во	Описание
1	447248A1	1	DECAL, Right Hand
2	447250A1	1	DECAL, Right Hand
3	447252A1	1	DECAL, Right Hand
4	447254A1	1	DECAL, Right Hand
6	447249A1	1	DECAL, Left Hand
7	447251A1	1	DECAL, Left Hand
8	447253A1	1	DECAL, Left Hand
9	447255A1	1	DECAL, Left Hand
11	315181A4	1	DECAL, Left Hand
12	303198A4	1	DECAL, Right Hand
13	311858A1	1	DECAL, SMV Emblem

1

WARNING

AVOID INJURY OR DEATH
BEFORE STARTING ENGINE:
Read operator's manual for safety information and operating instructions.
Read all tractor safety signs.
Be sure other people are clear of tractor and equipment.
Be sure gear shift is in neutral or park and PTO control is off.
Start engine only from seat.
Shields are for your protection. Keep them in place.
OPERATION:
When starting the tractor in cold weather, the tractor may move when transmission is engaged and clutch pedal is depressed. Use brakes to prevent tractor movement
Actuate forward/reverse lever only from the operator's seat.
With ROPS, always buckle and adjust seat belt.
No riders on tractor or equipment.
Keep hands, feet, and clothing away from power driven parts.
For road travel, couple brake pedals, use flashing warning lamps unless prohibited by law and keep SMV emblem visible.
TRACTORS CAN BE UPSET:
Reduce speed on turns and rough ground.
Avoid steep slopes.
Avoid rear upset. Pull only from drawbar, never higher.
WHEN TRACTOR HAS STOPPED:
Put forward/reverse and range levers in park.
Engage park lock or brake.
Lower implement to ground.
Disengage PTO, stop engine, and wait for all movement to stop before servicing or clearing equipment.

2

UAW

BUILDING THE BEST

MANUFACTURED IN RACINE, WISCONSIN USA

CASE IH

3

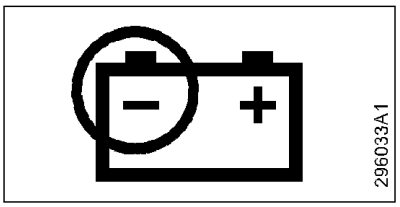

4

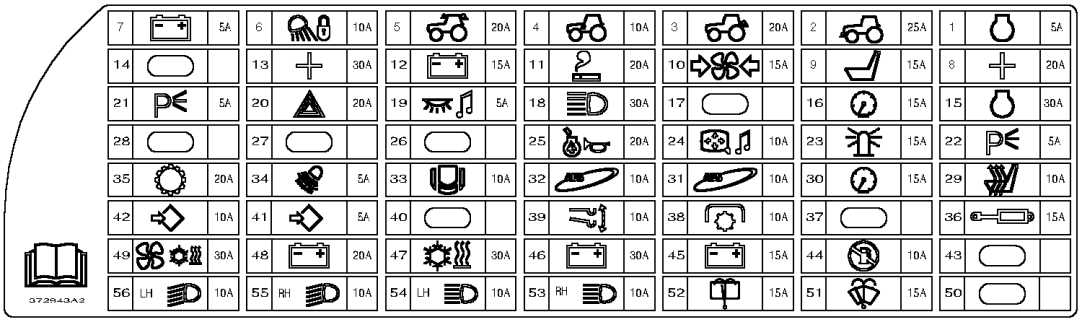

5

MAINTENANCE CHART

REF. NUMBER	SERVICE POINTS	GREASE	CHECK	CLEAN	CHANGE	FREQUENCY
1	Engine Oil Level		X			10 Hours/ Daily
2	Engine Coolant Level-Overflow Bottle		X			
3	Tranamission Oil Level		X			
4	Primary Fuel Filter Drain	Drain Water				50 Hours
5	Front Hitch	X				100 Hours
6	Deaeration Tank Coolant Level		X			300 Hours
7	Front Axle & Rear Hitch	X				
8	Fuel Tank	Drain Water				
9	Battery Water		X			
10	Engine Air & Coolant Hose Joints		X			
11	MFD Differential & Planetary Oil Levels		X			
12	Engine Oil & Oil Filter				X	
13	Fuel Filters				X	
14	Engine Coolant Filter				X	600 Hours
15	Antifreeze Protection		X			
16	Engine Air Primary & Secoundary Filters				X	
17	MFD Differential & Planetary Oils				X	1200 Hours
18	Engine Valve Adjustment(MX180, 200, 220)(See Manual)					
19	Hydraulic System(Oil Filter(s) & Breather)				X	1500 Hours
20	Engine Air Primary Filter			X		As Required
21	Cab Air Filter			X		
22	Grille Screen & Coolers			X		

CONSULT OPERATOR'S MANUAL FOR MORE INFORMATION

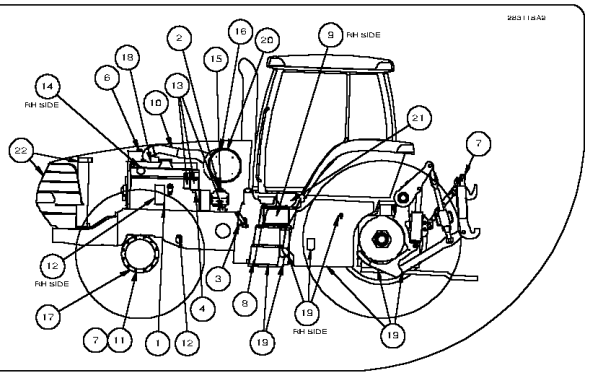

9

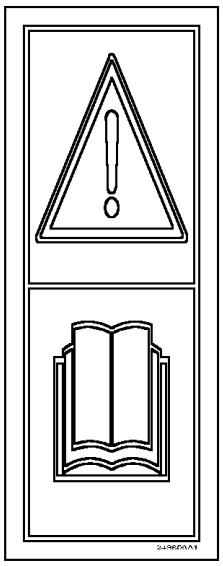

6

Adjustment of fuel pump beyond factory specs will void warranty on machine.

7

IMPORTANT
Failures due to use of improper fluid are not covered by warranty. For maximum protection use CASE IH HY-TRAN® ULTRA and FILTERS.
1334594C3

8

WARNING

ENTANGLEMENT HAZARD

- Always keep PTO driveline shields in place to avoid entanglement.
- Be sure implements are matched to tractor PTO speeds.
- Center and lock drawbar when using PTO.

To prevent bottoming or separation o f implement driveline, position drawbar accordin g to implement manufacturer's recommendation or as follows:

PTO Shaft	PTO Shaft end t o drawbar pin hole
540 RPM 6 spline	1 3/8 DIAMETER -14 INCH-(350 mm)
1000 RPM 21 spline	1 3/8 DIAMETER -16 INCH-(400 mm)
1000 RPM 20 spline	1 3/4 DIAMETER -20 INCH-(500 mm)

MX285 CASE IH MAGNUM TRACTOR (NORTH AMERICA)

09-57 DECALS

ссылка	Номер детали	Кол-во	Описание
1	296032A1	1	DECAL, Warning, Avoid Injury, English
1	296034A1	1	DECAL, Warning, Avoid Injury, French Canadian
2	296030A1	1	DECAL, Quality Assurance
3	296033A1	1	DECAL, Negative Jump Start
4	283118A2	1	DECAL, Maintenance Schedule, BSN JAZ132277
5	372943A2	1	DECAL, Fuse Location
6	A189007	1	DECAL, Warranty, Fuel Pump
7	1334594C3	1	DECAL, Hy-Tran Fluid, English
7	1334596C3	1	DECAL, Hy-Tran Fluid, French Canadian
7	1334595C3	1	DECAL, Hy-Tran Fluid, Spanish (NAO)
8	296031A3	1	DECAL, Warning, Avoid Injury, English
8	296028A4	1	DECAL, Warning, Avoid Injury, French Canadian
9	249806A1	1	DECAL, Read Operator Manual

1

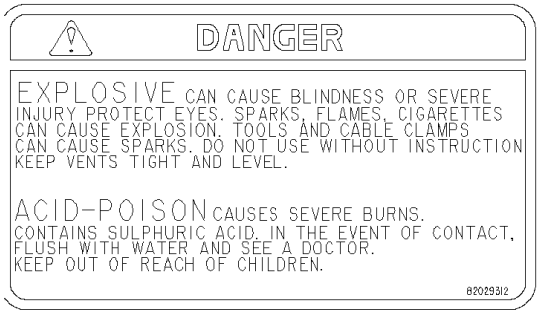
DANGER
EXPLOSIVE CAN CAUSE BLINDNESS OR SEVERE INJURY PROTECT EYES. SPARKS, FLAMES, CIGARETTES CAN CAUSE EXPLOSION. TOOLS AND CABLE CLAMPS CAN CAUSE SPARKS. DO NOT USE WITHOUT INSTRUCTION KEEP VENTS TIGHT AND LEVEL.
ACID-POISON CAUSES SEVERE BURNS.
CONTAINS SULPHURIC ACID. IN THE EVENT OF CONTACT, FLUSH WITH WATER AND SEE A DOCTOR.
KEEP OUT OF REACH OF CHILDREN.
82029312

2

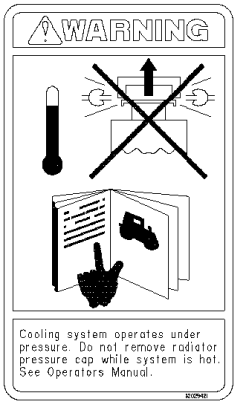
WARNING
Cooling system operates under pressure. Do not remove radiator pressure cap while system is hot. See Operators Manual.

3

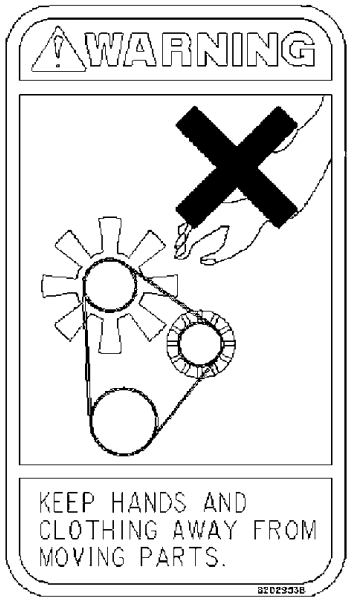
WARNING
KEEP HANDS AND CLOTHING AWAY FROM MOVING PARTS.
82029338

4

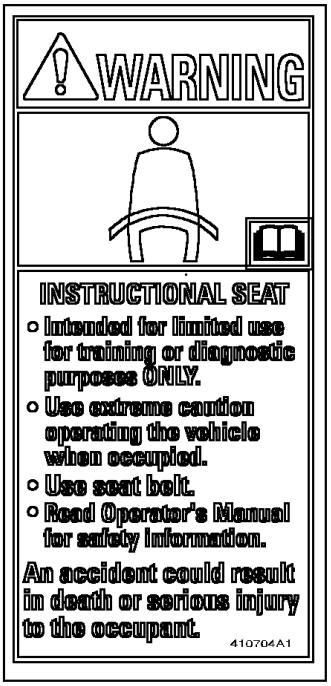
WARNING
INSTRUCTIONAL SEAT
o Intended for limited use for training or diagnostic purposes ONLY.
o Use extreme caution operating the vehicle when occupied.
o Use seat belt.
o Read Operator's Manual for safety information.
An accident could result in death or serious injury to the occupant.
410704A1

5

WARNING
TO AVOID INJURY, DO NOT STAND ON IMPLEMENT OR BETWEEN IMPLEMENT AND TRACTOR WHILE OPERATING LIFT CONTROL.
82030732

6

WARNING
To avoid possible eye damage from micro-wave signals emitted by this radar sensor. Do not look directly into sensor face.
82029314

ссылка	Номер детали	Кол-во	Описание
1	82029312	1	DECAL, Battery Safety, English
1	82025614	1	DECAL, Battery Safety, French Canadian
1	82025615	1	DECAL, Battery Safety, Spanish (NAO)
2	82029421	1	DECAL, Warning, Radiator, English
2	82029764	1	DECAL, Warning, Radiator, French Canadian
2	82029768	1	DECAL, Warning, Radiator, Spanish (NAO)
3	82029538	2	DECAL, Warning, Fan, English
3	82029716	2	DECAL, Warning, Fan, French Canadian
3	82029767	1	DECAL, Warning, Fan, Spanish (NAO)
4	410704A1	1	DECAL, Warning, Instructional Seat
5	82030732	2	DECAL, Warning, External Switch, English
5	82030733	2	DECAL, Warning, External Switch, French Canadian
5	82030734	2	DECAL, Warning, External Switch, Spanish (NAO)
6	82029314	1	DECAL, Warning, Radar, English
6	82025618	1	DECAL, Warning, Radar, French Canadian
6	82025619	1	DECAL, Warning, Radar, Spanish (NAO)